User Manual of Combiner Box SCB3-50A(EN)

ZYC ENERGY

ZERO YOUR CARBON

Version: V1.0
Released Date: 2025-11-11

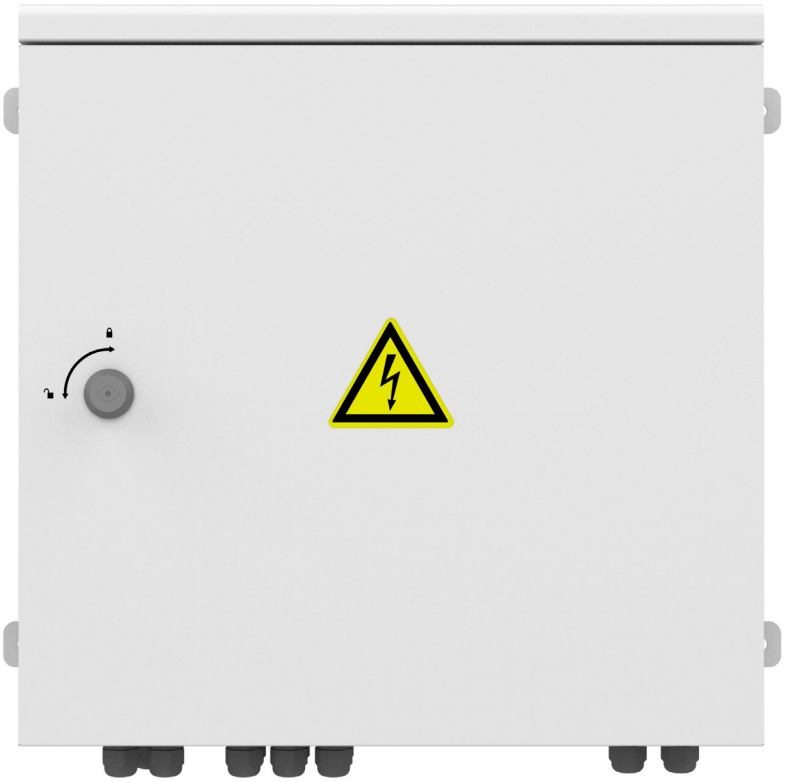

CONTENTS

1 SAFETY 1
1.1 INTENDED USE 1
1.2 OPERATOR QUALIFICATION REQUIREMENTS 1
1.3 SAFETY INFORMATION 1
1.4 ENVIRONMENTAL REQUIREMENTS 2
1.5 SAFETY PRECAUTIONS 2
2 INTRODUCTION 3
2.1 OVERVIEW 4
2.2 DIMENSIONS 6
2.3 SPECIFICATIONS 7
2.4 CIRCUIT DIAGRAM 8
2.5 NAMEPLATE 8
3 WALL MOUNT 10
3.1 ENVIRONMENTAL REQUIREMENTS 10
3.2 MOUNTING 10
4 CABLING 11
5 MAINTENANCE 13
6 DISPOSAL 14
7 WARRANTY 14

1 SAFETY

1.1 INTENDED USE

Combiner Box is designed for use in high-voltage energy storage systems. Its primary function is to collect and combine multiple DC input circuits into a single output circuit, providing centralized protection and isolation.

Combiner Box ensures safe and efficient power distribution. It is intended to be installed and operated by qualified personnel in compliance with local electrical standards and safety regulations.

This product is suitable for both indoor and outdoor applications. Any use other than as described in this document—such as operation beyond rated voltage, current, or environmental limits—is considered improper and may void the manufacturer's warranty.

1.2 OPERATOR QUALIFICATION REQUIREMENTS

The instructions in this document may only be carried out by qualified personnel who possess the following skills and knowledge:

- Understanding of battery functionality and operation
- Understanding of inverter functionality and operation
- Familiarity with and adherence to all locally applicable connection requirements, standards, and directives
- Familiarity with and adherence to this document and the associated system documentation, including all safety instructions
- Training in identifying and managing hazards associated with the installation and operation of electrical equipment and batteries
- Training in the installation and commissioning of electrical equipment

Failure to meet these requirements will render any manufacturer's warranty, guarantee, or liability null and void, unless it can be demonstrated that the damage was not caused by non-compliance

1.3 SAFETY INFORMATION



Danger
Do not install or remove cables with electricity. Any contact between the cable core and conductor may generate electric arcs and sparks and finally lead to fire and injury.



Danger
All the cables and plugs can have a have voltage from connected battery modules, must be careful when connecting the cables and plug in the terminals.



Warning
Any personnel must be operating or installing with protective equipment such as insulated gloves, safety shoes and goggles etc.

Copyright© 2024 ZYC Energy Co., Ltd. All Rights Reserved.

Danger

This product must only be used for its intended purpose. Any other use is considered improper and may be hazardous. The manufacturer shall not be held liable for any damage resulting from improper, incorrect, or unreasonable use.

Caution

This manual is an integral and essential part of the product. Please read it carefully, as it contains important information regarding safe operation, proper use, and maintenance of the equipment.

Warning

When system fails, the components can become very hot and can cause serious injury if touched. Do not touch any component of the system without guidance when a malfunction occurs.

1.4 ENVIRONMENTAL REQUIREMENTS

Failure to follow these instructions may result in severe consequences, including equipment damage, personal injury, or death from electric shock. Therefore, all safety instructions must be carefully read and fully understood before installing or operating the Combiner Box. For any questions or further information, please contact ZYC local service.

When installing the enclosure in a closed environment, ensure the area is well-ventilated and allows for regular air circulation. For outdoor installations, position the enclosure in a consistently shaded area, protected from direct sunlight. These precautions are essential to prevent unnecessary or excessive overheating, which can, over time, reduce the lifespan and impair the performance of the internal components.

1.5 SAFETY PRECAUTIONS

Danger of Electric Shock

High voltages are present in the Combiner Box and associated DC cables. Contact with live components or damaged equipment can result in death or serious injury. To ensure safe operation, follow these precautions carefully:

1. Live Voltage in the Combiner Box

- Always wear appropriate personal protective equipment (PPE) when working on the Combiner Box.
- Do not touch live components.
- Before performing any work, disconnect the Combiner Box from all voltage sources unless supply voltage is absolutely required.
- Ensure the device cannot be accidentally reconnected during maintenance.
- Verify that no voltage is present before starting work.
- Properly ground and short-circuit the system.
- Cover or isolate any adjacent live components; protective covers must always be installed.

Copyright© 2024 ZYC Energy Co., Ltd. All Rights Reserved.

2. Live DC Cables

- Ensure DC cables from batteries or inverters are voltage-free before connecting or working on them.
- Always wear suitable PPE when handling DC cables or working on the Combiner Box.

3. Risk from a Damaged Combiner Box

- Only operate the Combiner Box if it is in a technically sound and safe condition.
- Regularly inspect the Combiner Box for visible damage.
- Ensure all external safety devices and protective equipment are easily accessible at all times.
- Verify that all safety equipment is functioning correctly before use.

Copyright© 2024 ZYC Energy Co., Ltd. All Rights Reserved.

2 INTRODUCTION

2.1 OVERVIEW

Front View

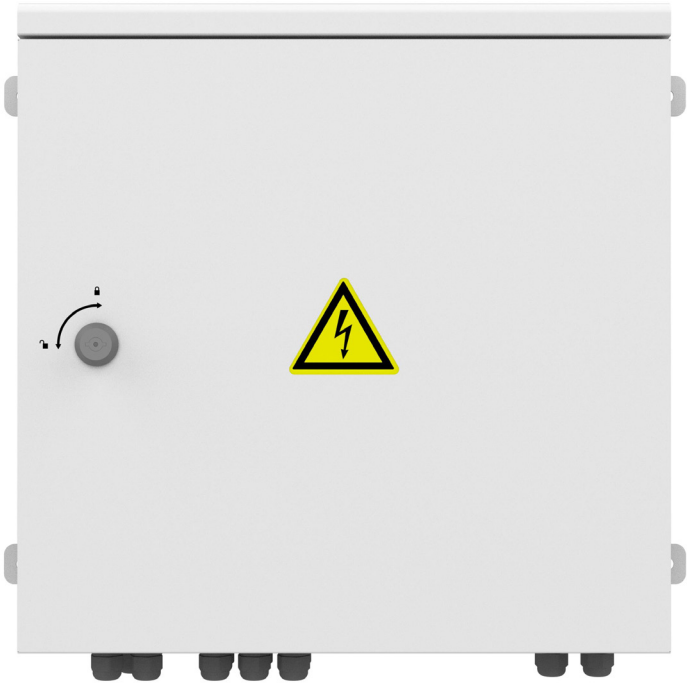

Bottom View

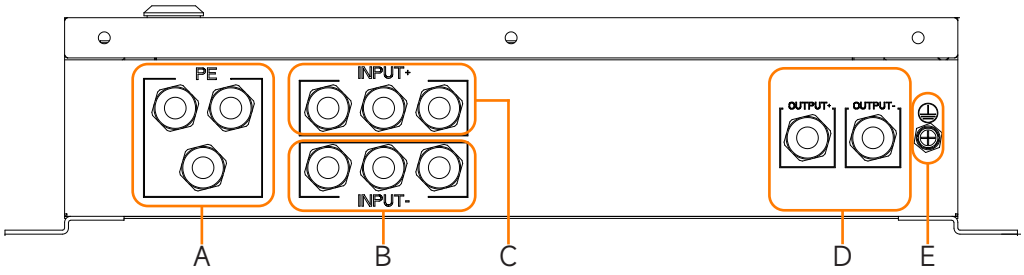

Zone	Function
A	PE Cable inlet from battery towers
B	DC- Cable inlet from battery towers
C	DC+ Cable inlet from battery towers
D	DC+/- Cable outlet to inverter
E	Grounding point of Combiner Box

Figure 2.1

Copyright© 2024 ZYC Energy Co., Ltd. All Rights Reserved.

Inner View

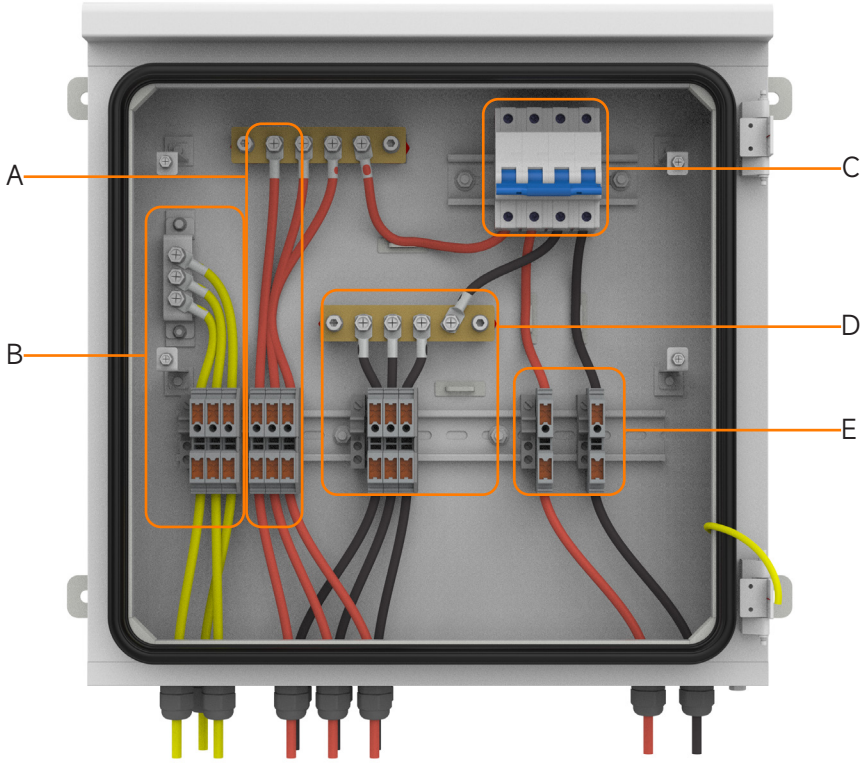

Zone	Function
A	DC+ Cable inlet aera
B	PE Cable inlet aera
C	Main Circuit Breaker
D	DC- Cable inlet aera
E	DC+/- Cable outlet aera

Innver View(With Cover)

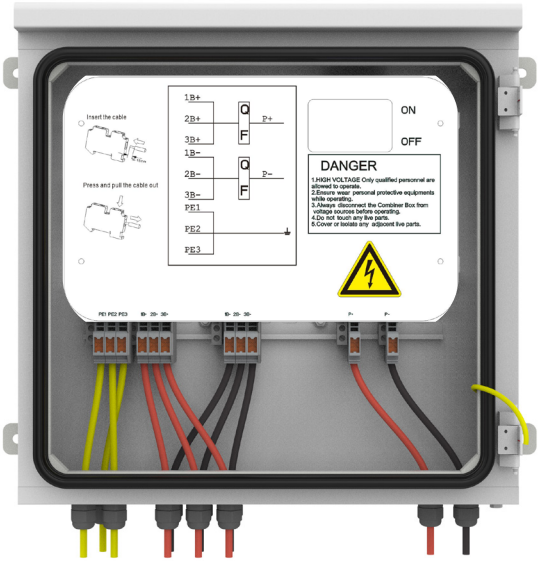

Figure 2.2

Copyright© 2024 ZYC Energy Co., Ltd. All Rights Reserved.

2.2 DIMENSIONS

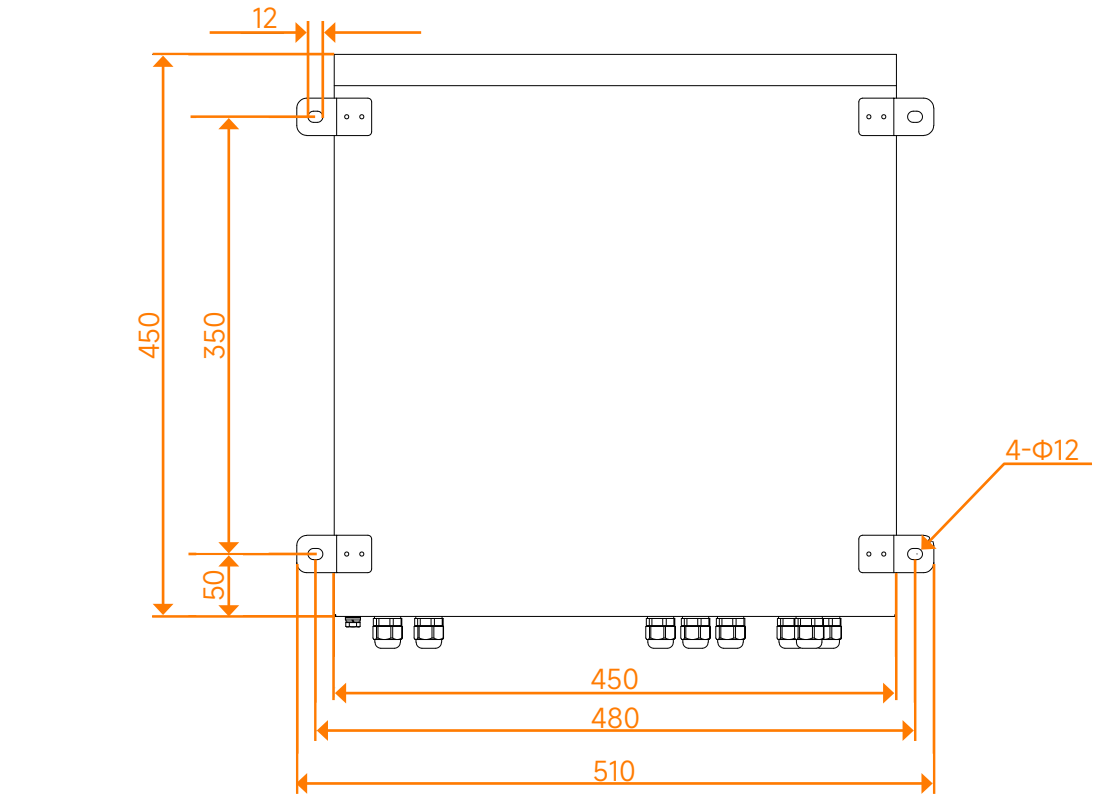

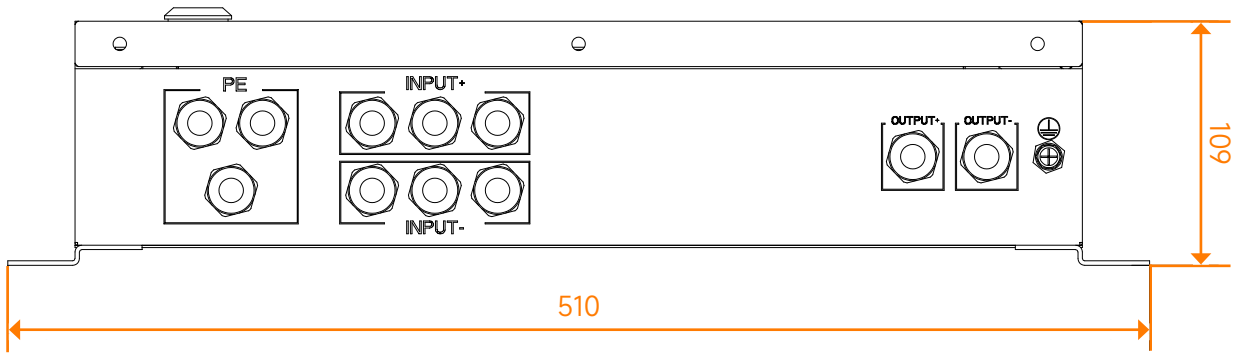

Figure 2.3

Copyright© 2024 ZYC Energy Co., Ltd. All Rights Reserved.

2.3 SPECIFICATIONS

Combiner Box	Specifications
General Data	
Max Operating Voltage	1000V DC
Rated Insulation Voltage	1000V
Rated Impulse Voltage	1000V
Maximum input current per tower	50A
Maximum output current	50A
Rated short-time withstand current	500A/10ms
Mechanical Data	
Enclosure	SPCC
Dimension(HxWxD)	510x476x109mm
Weight	8.05kg
IP Rating	IP55
Environmental Data	
Operating Temperature	-20~55°C
Humidity	0~95% non-condensing
Altitude	Up to 4,000m
DC Input Data	
Max Connected Tower	3
DC Cable Glands entry	PG9(Φ4~Φ8mm)
DC Conductor cross-section	XTV10(2.5-10mm^2)
Ground Cable cross-section	XTV10(2.5-10mm^2)
DC Output Data	
Output cable glands entry	PG9(Φ4~Φ8mm)
DC Conductor cross-section	XTV10(2.5-10mm^2)
Ground Cable cross-section	XTV10(2.5-10mm^2)

Copyright© 2024 ZYC Energy Co., Ltd. All Rights Reserved.

2.4 CIRCUIT DIAGRAM

Combiner Box is designed for high voltage systems, it allows up to three towers connected in parallel to build up a system with larger storage capacity.
The circuit diagram can be found right inside Combiner Box, covering the wiring aera.

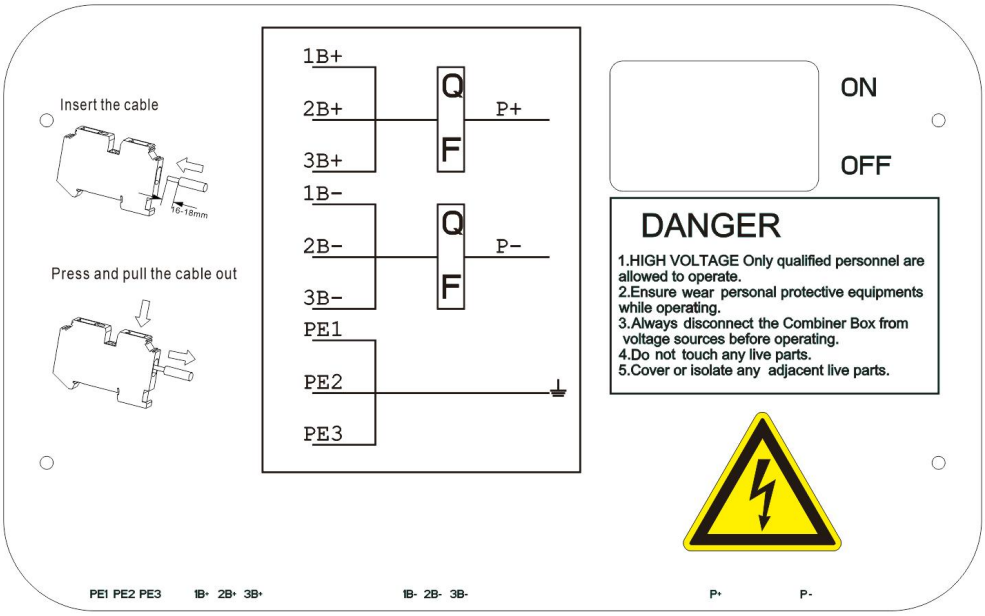

*'1B+','1B-','PE1' mean the power cable+, power cable- and PE cable from the tower one.

Figure 2.4

2.5 NAMEPLATE

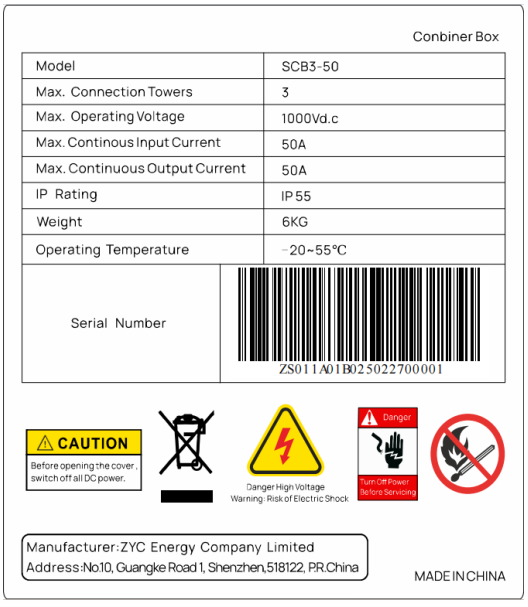

Figure 2.5

Copyright© 2024 ZYC Energy Co., Ltd. All Rights Reserved.

Nameplate printed on Combiner Box includes information:

- Manuafacturer
- Product model
- Product specifications
- Serial Number
- Production date

eg. ZS011A01B0**250227**00001

25: Year, here means year 2025
02: Month, here means February
27: Day, here means 27th.
The bolded number indicates the date of manufacture of the product.

MARKING DETAILS

Please read the markings on the nameplate carefully and follow all related instructions to ensure safe and proper operation.



Before opening the cover, switch off all DC power



Do not dispose of the system together with household waste. Please contact ZYC's service partner to dispose of it in accordance with regulations for electronic waste and used batteries



Danger high voltage.
Warning: Risk of Electric Shock



Turn off power before surviving



Keep the system away from flame or any fire source

Copyright© 2024 ZYC Energy Co., Ltd. All Rights Reserved.

3 WALL MOUNT

In the event of a fault, an arc may occur inside the combiner box. If the combiner box is installed on flammable materials, the arc could potentially ignite a fire.

- Do not install the combiner box near highly flammable materials.
- Do not install the combiner box in potentially explosive environments.
- Do not install the combiner box on flammable building materials.

3.1 ENVIRONMENTAL REQUIREMENTS

Combiner Box is recommended to be installed on a solid wall, when selecting the installation site, please follow the requirements as below:

- The installation site must allow safe and unrestricted access at all times, without the need for auxiliary equipment such as scaffolding or lifting platforms. Limited access may hinder maintenance.
- The location must not obstruct any emergency escape routes.
- The site must be suitable for the weight and dimensions of the combiner box.
- The installation location should not be exposed to direct sunlight.
- It is recommended that the installation height be at least 1.6 meters above ground level.
- Ensure the combiner box enclosure is not positioned in a rainwater runoff path.

When installating Combiner Box, please follow the requirements as below:

- When installing the combiner box, ensure that the connection area faces downward.
- Do not install the combiner box at an angle; it must be mounted vertically.
- Recommended mounting height for wall-mounted boxes.

3.2 MOUNTING

Wear protective equipment when mounting the 8 kg combiner box to prevent injury in case it is dropped. Dimensions of Combiner Box are as in Figure 2.3, please follow the procedures below to finish the mounting:

1.Mark drill hole positions on the wall or stand

2.Drill holes at the marked positions(M6x50 expansion screws will be used)

3.Insert screw anchors if required

4.Attach the combiner box to the wall or stand using the M6x50 hex socket head expansion bolt, including washer.(Delivered with Combiner Box)
If the bolts attached are not suitable for the exact location, please select proper screws and washers taking wall properties into account.

5.Ensure Combiner Box is firmly and securely mounted to the wall.

Copyright© 2024 ZYC Energy Co., Ltd. All Rights Reserved.

4 CABLING

Warning: High voltages are present in the live parts of the Combiner Box. Work is only allowed when the power is disconnected and all local safety regulations are strictly followed.

- Disconnect all voltage sources.
- Prevent the device from being re-energized.
- Confirm that no voltage is present.
- Apply grounding and short-circuit measures.
- Cover or isolate all nearby live components. Protective covers must always be in place.

STEP 1 ROUTING THE CABLES THROUGH THE CABLE GLANDS

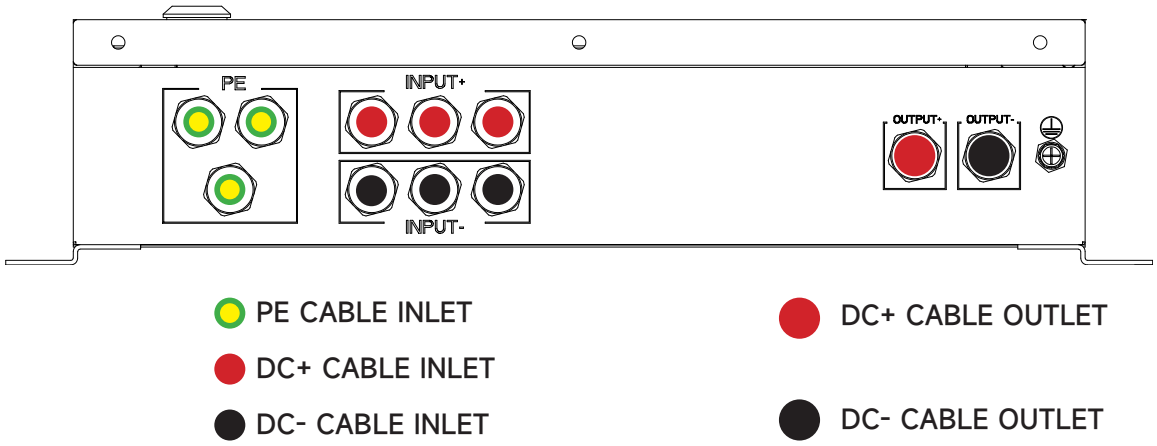

Figure 4.1

Please follow the steps below:

1. Unscrew the sealing ring from the cable gland.
2. Feed the cable through the sealing ring
3. Route the cable through the cable gland.
4. Screw the sealing ring back onto the cable gland.
5. Adjust the cable to the required length.

Copyright© 2024 ZYC Energy Co., Ltd. All Rights Reserved.

STEP 2 CONNECT THE CABLES INSIDE

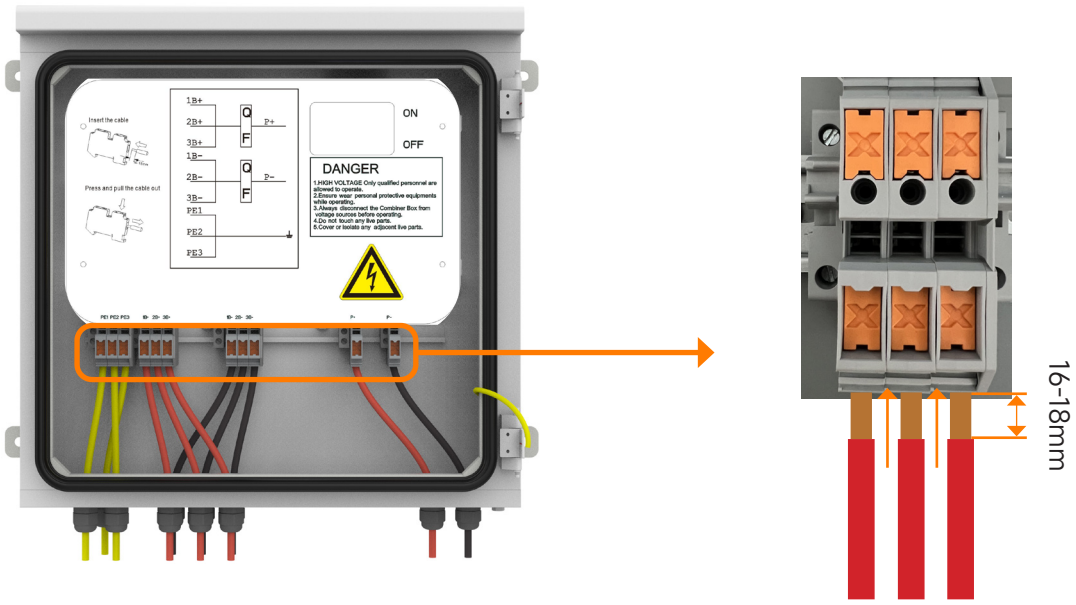

Figure 4.2

As mentioned in chapter 2.3, please meet the parameter as below when selecting cables:
Cross section(Flexible cable): 2.5-16mm²/ AWG12-AWG6

The Combiner Box is pre-wired, with all internal cables connected (DC+, DC-, grounding, MCB, P+, P-). Installers only need to connect the external cables.

Follow these steps to complete the wiring:
1. Find the corresponding XTV terminal

PE ->Grounding Cable
1B+/2B+/3B+ ->DC+ Cable Input
1B-/2B-/3B- ->DC- Cable Input

P+ ->DC+ Cable Outlet(To PCS)
P- ->DC- Cable Outlet(To PCS)

2. Cut the cable to the required length and strip 16–18 mm of insulation.

3. Insert the cables into the XTV terminal.

4. Try to pull the cable out to ensure it is securely connected and cannot be pulled out.

Copyright© 2024 ZYC Energy Co., Ltd. All Rights Reserved.

UNPLUG THE CABLES

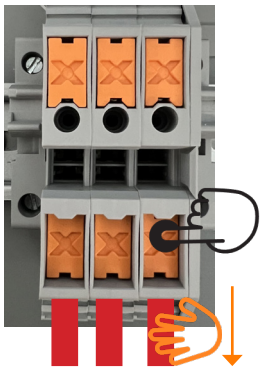

Press the orange button of corresponding XTV terminal and pull out the cables

Figure 4.3

5 MAINTENANCE

It is recommended to perform regular inspections of Combiner Box and verify the following points:

- Ensure there are no visible signs of rust or corrosion that could affect functionality or safety.
  (Annual visual inspection)
- Verify that there is no water ingress or excessive dust accumulation.
  (Annual visual inspection)
- Confirm that the grounding busbar and drainage system are functioning properly.
  (Annual visual inspection)
- Check that all DC connections are properly tightened.
  (Annual torque wrench check)
- Ensure that terminals show no signs of burning or overheating.
  (Annual visual inspection)
- Verify that electrical circuits remain properly insulated from grounding systems.
  (Five-year insulation test)
- After completing all inspections and maintenance, ensure that the enclosure doors are securely closed.
  (Annual visual inspection)

*NOTICE:
If any damaged components need to be replaced, use only identical replacement parts that match the original materials.

If electrical connections are damaged due to mechanical or electrical faults, or rodent activity, immediately disconnect the system power or, at minimum, isolate the affected section. After confirming that the equipment has not been compromised, replace the wiring using materials of the same type. For further information, please contact ZYC local service.

Copyright© 2024 ZYC Energy Co., Ltd. All Rights Reserved.

6 DISPOSAL

When disposing of discarded Combiner Box, observe local regulations for the disposal of electronic wastes. And do not dispose of Combiner Box together with household waste.

7 WARRANTY

For more information about the warranty, please visit ZYC Portal on www.zyc.energy and find the Warranty Letter.

Copyright© 2024 ZYC Energy Co., Ltd. All Rights Reserved.

Contact Us

ZYC Energy Australia Pty Ltd

Suite 37 Ridge St North Sydney NSW 2060, Australia

+61 2 8006 1868

service@zyc-energy.com.au

ZYC Lithium Batteries S.L.

Calle Angelita Cavero 13 Oficina 4 Madrid (28027), Madrid, España

+34 697919475 / +49 7119987199

service@zyc.energy

ZYC Energy Company Limited

GuangKe Road 1, Pingshan, Shenzhen, P.R. China

+86 (0) 755 2839 4019

service@zyc.energy

WhatsApp: +86 19168831702

www.zyc.energy

ZYC Energy B.V.

Stationsplein 45, Unit 4.004, 3013AK Rotterdam

+31 6 020 700 00

service@zyc.energy

ZYC Energy Deutschland

Königstraße 35, 70173 Stuttgart, Germany

+49 155 60107494

service@zyc.energy

Copyright© 2024 ZYC Energy Co., Ltd. All Rights Reserved.