SolaX Power Network Technology (Zhejiang) Co., Ltd.

Add.: No. 288, Shizhu Road, Tonglu Economic Development Zone, Tonglu City, Zhejiang Province, 310000 P.R. China

Tel.: +86 (0) 571-5626 0011

E-mial: info@solaxpower.com

320101057701

Triple Power Lithium-ion Battery

User Manual

50 Ah, 72 Ah



Copyright © SolaX Power Technology (Zhejiang) Co., Ltd. All rights reserved.

No part of the document may be reproduced or transmitted in any form or by any means without prior written consent of SolaX Power Technology (Zhejiang) Co., Ltd. (hereinafter referred to as SolaX). SolaX reserves the right of final interpretation.

www.solaxpower.com

CHNAGE HISTORY

Changes between document versions are cumulative. The latest version contains all updates made in previous versions.

Version 00 (Jan. 30, 2023)

Initial release

Version 01 (Jul. 27, 2023)

Updated 3.1 Dimensions and Weight (change of the weight of battery module)

Updated 4.4.3 Accessory (change of the packing list)

Updated 6.3 Cable Connection (added installation steps of cover plate)

Updated 7.3 Status Indicators (change of the figure of indicators)

Content

1 Note on this Manual....1
1.1 Scope of Validity....1
1.2 Target Group....1
1.3 Symbols....1
2 Safety....2
2.1 Safety Instruction....2
2.1.1 General Safety Precautions....2
2.1.2 Explanation of Labels....3
2.2 Response to Emergency Situations....4
2.2.1 Leaking Batteries....4
2.2.2 Fire....4
2.2.3 Wet Batteries and Damaged Batteries....4
2.3 Qualified Installer....5
3 Production Information....6
3.1 Dimensions and Weight....6
3.2 Installation Space....8
3.3 Appearance....9
3.4 Basic Features....13
3.4.1 Features....13
3.4.2 Certifications....13
3.5 Specification....14
3.5.1 T-BAT-SYS-HV-S25....14
3.5.2 T-BAT-SYS-HV-S36....16
4 Preparation before Installation....18
4.1 Prerequisites....18
4.2 Safety Gear....19
4.3 Installation Tools....19
4.4 Preparation....20
4.4.1 Check for Transport Damage....20
4.4.2 Unpacking....20
4.4.3 Accessory....21
5 Equipment Installation....24
5.1 Installation Environment Requirements....24
5.2 Installation Procedure....25
6 Wiring....31
6.1 Current Terminal Connection....31

6.2 Communication Connection (connecting to inverter) 32
6.3 Cable Connection 33
6.3.1 Wiring without Series Box 33
6.3.2 Wring with Series Box 36
7 Commissioning 40
7.1 DIP Switch 40
7.2 Start and Shutdown Procedure 41
7.3 Status Indicators 42
8 Troubleshooting 45
9 Decommissioning 48
9.1 Dismantling Battery 48
9.2 Packing 48
10 Maintenance 49
11 Disclaimer 50

1 Note on this Manual

1.1 Scope of Validity

This manual, an integral part of T-BAT Series, contains information on assembly, commissioning, maintenance and failure of the device. Please read it carefully before operation.

BMS
TBMS-MCS0800
Battery Module
TP-HS25, TP-HS36

Note: In case of one tower, there are 3 parts of the T-BAT system, which includes BMS, battery module(s) and base. In case of two towers, there 4 parts of the system, such as, BMS, battery module(s), base and Series Box. For details, please refer to 3.3.1 Configuration List on page.

1.2 Target Group

This Manual is designed for qualified electricians. The installation procedure described in the Manual may only be performed by qualified electricians.

1.3 Symbols

There are several safety marks in the Manual. The detailed explanation is shown as follows:



DANGER!
"DANGER" indicates a hazardous situation which, if not avoided, will result in serious injury or death.



WARNING!
"WARNING" indicates a hazardous situation which, if not avoided, could result in serious injury or death.



CAUTION!
"CAUTION" indicates a hazardous situation which, if not avoided, could result in minor or moderate injury or death.



NOTE!
"NOTE" indicates that tips will be given to achieve better using effect.

2 Safety

2.1 Safety Instruction

For safety reasons, installers are responsible for familiarizing themselves with the contents of the Manual and all Warnings before performing installation.

2.1.1 General Safety Precautions



WARNING!
Do not crush or impact battery, and always dispose of it according to relevant safety regulations.

Observe the following precautions:

- Risks of explosion:
- Do not involve the battery module in a collision;
- Do not crush or puncture the battery module;
- Do not dispose of the battery module in a fire.
- Risks of fire:
- Do not expose the battery module to the temperature in excess of 140°F/60°C;
- Do not place the battery module near a heat source, such as a fireplace;
- Do not expose the battery module to direct sunlight;
- Do not allow the battery connectors to touch conductive objects, such as wires.
- Risks of electric shock:
- Do not disassemble the battery module
- Do not touch the battery module with wet hands;
- Do not install or operate the battery module in places where there is excessive moisture or liquids;
- Keep children away from the battery module.
- Risks of damage to battery module:
- Do not expose the battery module in places where there is excessive moisture or liquids;
- Do not place any objects on top of the battery module.

T-BAT SYS-HV should only be installed for residential applications and not be for commercial application.



CAUTION!
If the battery module is not installed within a month after receipt, it must be charged for maintenance. Non-operational batteries should be discarded according to the local regulations.

2.1.2 Explanation of Labels

Label	Explanation
	CE mark for conformity
	TUV certification
	UKCA mark of conformity
	The battery system must be disposed of at a proper facility for environmentally-safe recycling.
	Do not dispose of the battery together with household waste.
	Do not dispose of the battery together with household waste.
	Read the enclosed documentation.
	Keep the battery system away from children.
	Keep the battery system away from open flames or ignition sources.
	Caution, risk of danger
	Caution, risk of electric shock
	The battery module may explode.

2.2 Response to Emergency Situations

2.2.1 Leaking Batteries

In case the leakage of electrolyte solution occurs, please avoid direct contact with the electrolyte solution and the gas that may be generated by it. Direct contact may lead to skin irritation or chemical burns. If users come into contact with the electrolyte solution, please do as follows:

- Accidental inhalation of harmful substances: Evacuate from the contaminated area, and seek medical attention immediately.
- Eye contact: Rinse eyes with flowing water for 15 minutes, and seek medical attention immediately.
- Dermal contact: Wash the affected area thoroughly with soap and water, and seek medical attention immediately.
- Ingestion: Induce vomiting, and seek medical attention immediately.

2.2.2 Fire

Please keep a Class ABC fire extinguisher or a carbon dioxide extinguisher near the equipment.

WARNING!
The battery module may catch fire when heated above 302°F.



If a fire breaks out where the battery module is installed, please do as follows:

- Extinguish the fire before the battery module catches fire;
- If the battery module catches fire, please do not try to put out the fire, and evacuate immediately.

WARNING!
In case of catching fire, the battery module will produce noxious and poisonous gases, and please keep away the battery.

2.2.3 Wet Batteries and Damaged Batteries

Do not touch the battery module after being wet from and soaked in the water.

Do not use the battery module if it is damaged. Otherwise, the loss to life and property will be caused.

Please pack the battery in its original packaging, and return it to SolaX or the distributor.

WARNING!
Damaged batteries may leak electrolyte or produce flammable gas. If users suspect that the battery is damaged, please immediately contact SolaX for advice and information.

2.3 Qualified Installer



WARNING!
All operations of T-BAT SYS-HV relating to electrical connection and installation must be carried out by qualified personnel.

A skilled worker is defined as a trained and qualified electrician or installer who has all of the following skills and experience:

- Knowledge of the functional principles and operation of grid-tied systems;
- Knowledge of the dangers and risks associated with installing and using electrical devices and acceptable mitigation methods;
- Knowledge of the installation of electrical devices;
- Knowledge of and adherence to this Manual and all safety precautions and best practices.

3 Production Information

3.1 Dimensions and Weight

A battery management system (hereinafter referred to as BMS) is an electronic system that manages a rechargeable battery.

A battery module is a type of electrical battery which can charge or discharge loads.

In case of one tower, the whole system mainly comprises a BMS, battery module(s) and Base. In case of two towers, the whole system comprises a BMS, battery modules, Base and Series Box.

	TBMS-MCS0800	TP-HS25	TP-HS36	Base	Series Box
Length (mm)	510.00	510.00	510.00	510.00	510.00
Width (mm)	365.00	365.00	365.00	365.00	365.00
Height (mm)	157.00	152.00	152.00	104.2	157.00
Weight (kg)	13.00	30.00	34.00	9.00	10.00

BMS (TBMS-MCS0800)

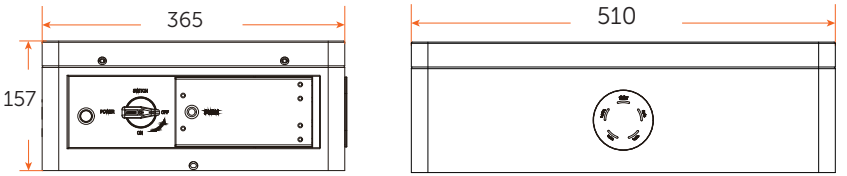

Battery module (TP-HS25/TP-HS36)

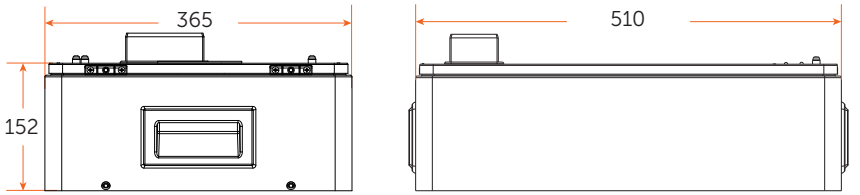

Base

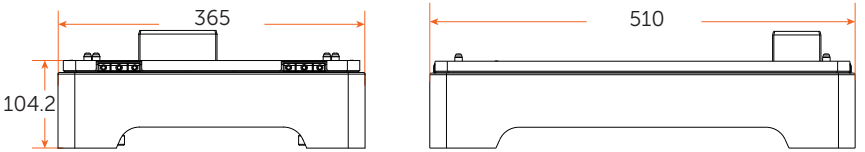

Series Box

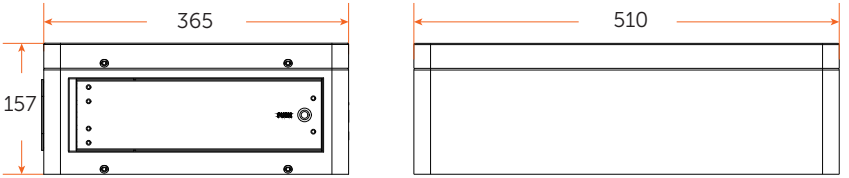

3.2 Installation Space

One Tower

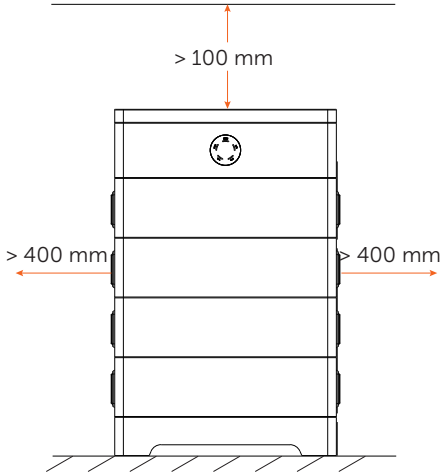

Two towers

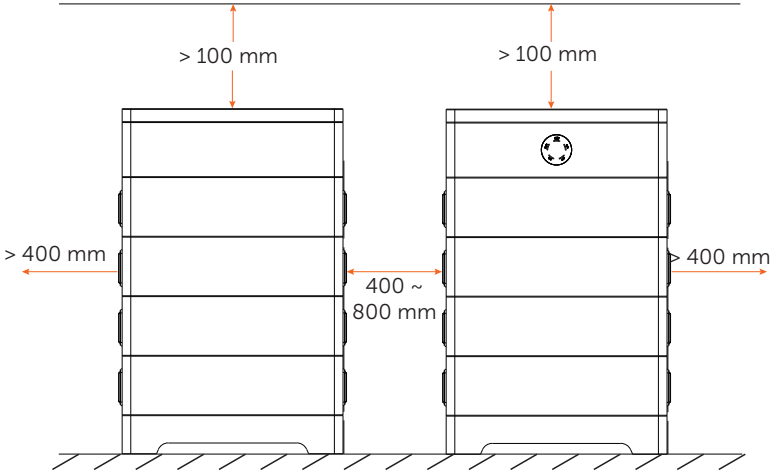

*Note: The above figures show an example of installation space of “One Tower“ and “Two Towers“.

3.3 Appearance

- BMS

Left side view

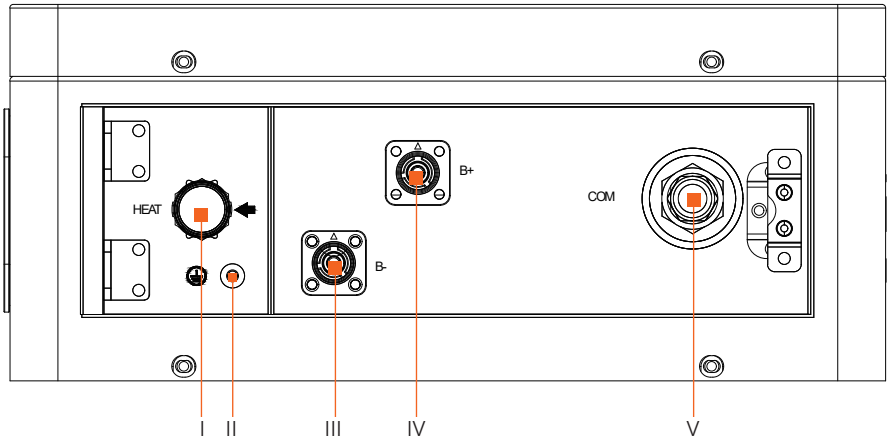

Item No.	Description
I	HEAT: Connect "HEAT" port of Series Box (if any); or, the port must be connected to a short-circuit plug. *Note: The port has been insert the short-circuit plug before delivery, DO NOT remove it.
II	Grounding port: Connect the Grounding port of Series Box (if any); or, the port doesn't need to be connected .
III	B-: Connect "B+" of Series Box (if any); or, connect the "IV B+" with short power cable.
IV	B+: Connect "B-" of Series Box (if any); or, connect the "III B-" with short power cable.
V	COM: Connect "COM" port of Series Box (if any); or, the port doesn't need to be connected. *Note: The port has been covered a waterproof cap before delivery, DO NOT remove it.

Right side view

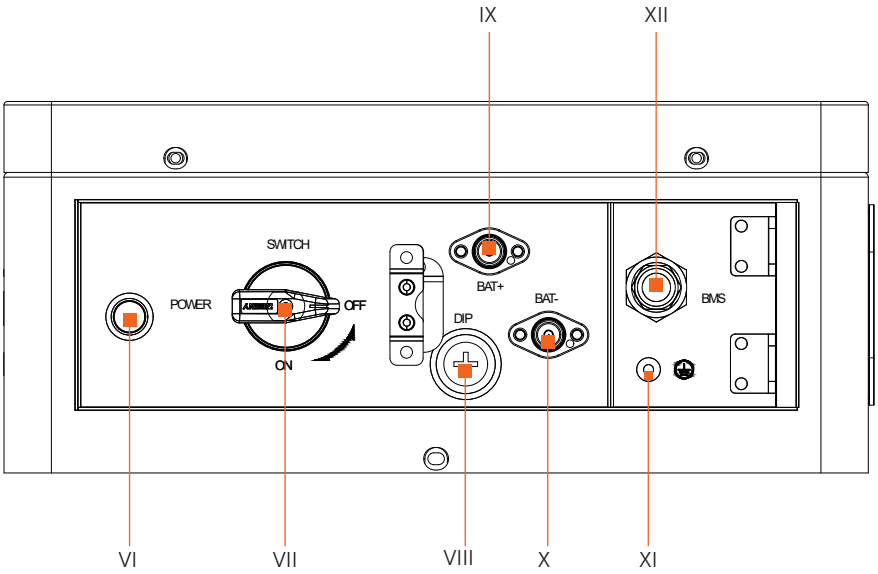

Item No.	Description
VI	POWER: Start system
VII	SWITCH: A switch for battery's input and output
VIII	DIP: Realize battery's parallel function (A reserved function)
IX	BAT+: Connect BMS's BAT+ to inverter's BAT+
X	BAT-: Connect BMS's BAT- to inverter's BAT-
XI	GND: Grounding port of BMS to inverter's grounding port
XII	BMS: Connect the "BMS" port of BMS to the "BMS" port of inverter

- Battery Module

Top

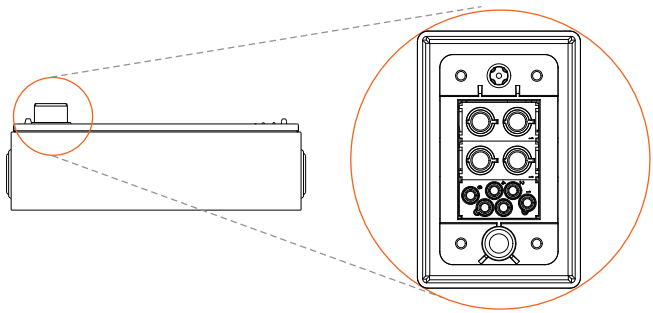

The hot-plug interface is connected to the bottom of battery module or BMS.

Bottom

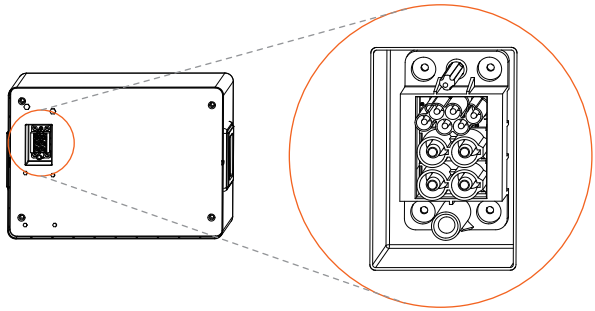

The hot-plug interface is connected to the top of battery module or Base.

- Base

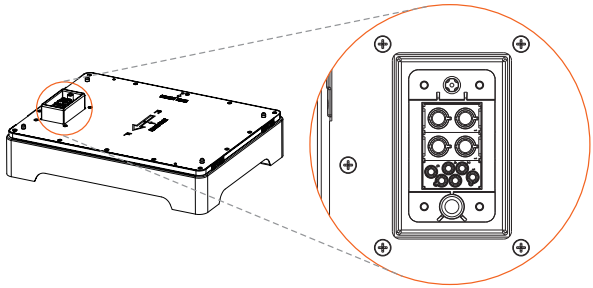

The hot-plug interface is connected to the bottom of battery module.

- Series Box

Left side view

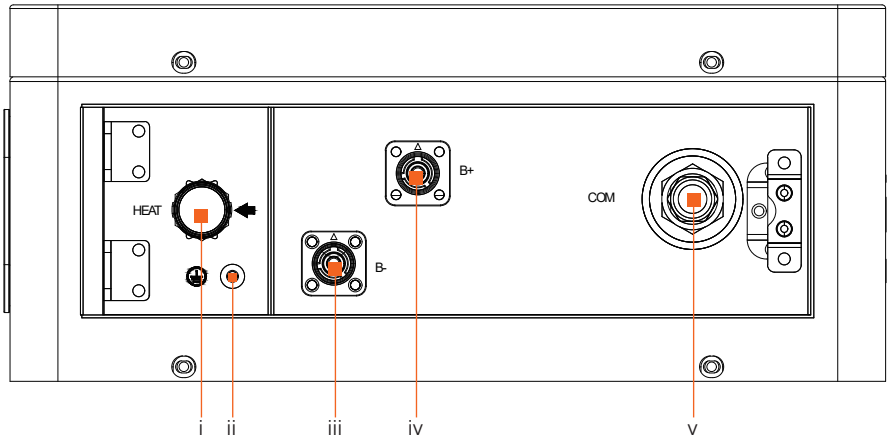

Item No.	Description
i	HEAT: Connect to the "HEAT" port of BMS
ii	GND: Connect the grounding port to the grounding port of BMS
iii	B-: Connect to the "B-" of BMS
iv	B+: Connect to the "B+" of BMS
v	COM: Connect to the "COM" port of BMS

3.4 Basic Features

3.4.1 Features

The T-BAT SYS-HV is one of the most advanced energy storage systems on the market today, using state-of-the-art technology, and having the characteristics of high reliability and convenient control. Characteristics are shown as follows:

- 90% DOD;
- 95% Battery Round-trip Efficiency;
- Cycle Life > 6000 Cycles;
- Secondary Protection;
- IP65 Protection Level and Protection Class I;
- Safety & Reliability;
- Small Occupied Area;
- Floor Mounting.

3.4.2 Certifications

BAT system safety	CE, RCM, IEC 62619, IEC 62620, IEC 62477-1, IEC 60730 Annex H, IEC 62040, VDE-AR-E2510, IEC 60529, UN38.3
UN number	UN 3480
Hazardous materials classification	Class 9
UN transportation testing requirements	UN 38.3
International protection marking	IP65, Protection Class I

3.5 Specification

3.5.1 T-BAT-SYS-HV-S25

- Configuration List

No.	Model	BMS	Battery Module	Nominal Energy (kWh)	Operating Voltage (Vdc)
1	T-BAT HS5.0	TBMS-MCS0800 × 1	TP-HS25 × 2	5.12	90-116
2	T-BAT HS7.5	TBMS-MCS0800 × 1	TP-HS25 × 3	7.68	135-174
3	T-BAT HS10.0	TBMS-MCS0800 × 1	TP-HS25 × 4	10.24	180-232
4	T-BAT HS12.5	TBMS-MCS0800 × 1	TP-HS25 × 5	12.8	225-290
5	T-BAT HS15.0	TBMS-MCS0800 × 1	TP-HS25 × 6	15.36	280-349
6	T-BAT HS17.5	TBMS-MCS0800 × 1	TP-HS25 × 7	17.92	315-406
7	T-BAT HS20.0	TBMS-MCS0800 × 1	TP-HS25 × 8	20.48	360-465
8	T-BAT HS22.5	TBMS-MCS0800 × 1	TP-HS25 × 9	23.04	405-522
9	T-BAT HS25.0	TBMS-MCS0800 × 1	TP-HS25 × 10	25.6	450-580
10	T-BAT HS27.5	TBMS-MCS0800 × 1	TP-HS25 × 11	28.16	495-636
11	T-BAT HS30.0	TBMS-MCS0800 × 1	TP-HS25 × 12	30.72	540-695
12	T-BAT HS32.5	TBMS-MCS0800 × 1	TP-HS25 × 13	33.28	585-750

- Performance

Module	T-BAT HS5.0	T-BAT HS7.5	T-BAT HS10.0	T-BAT HS12.5	T-BAT HS15.0	T-BAT HS17.5
Nominal Voltage (Vdc)	102.4	153.6	204.8	256	307.2	358.4
Operating Voltage (Vdc)	90-116	135-174	180-232	225-290	270-349	315-406
Nominal Capacity (Ah) [1]	50	50	50	50	50	50
Nominal Energy (kWh) [1]	5.12	7.68	10.24	12.8	15.36	17.92
Usable Energy 90% DOD (kWh) [2]	4.6	6.9	9.2	11.5	13.8	16.1
Max. Charge/Discharge Current (A) [3]	45	45	45	45	45	45
Recommend Charge/ Discharge Current (A) [5]	45	45	45	45	45	45
Standard Power (kW)	3.1	4.6	6.1	7.7	9.2	10.8
Max. Power (kW)	4.608	6.912	9.216	11.52	13.824	16.128
Short-circuit Current (A)	1900	1900	1900	1900	1900	1900
Battery Round-trip Efficiency (0.2 C, 25°C)	95%					
Expected Lifetime (25°C)	10 years					
Cycle Life 90% DOD (25°C)	6000 cycles					
Charge Temperature	-30°C ~ 53°C (on heating function); 0°C ~ 53°C (off heating function) [4]					
Discharge Temperature	-30°C ~ 53°C (on heating function); -20°C ~ 53°C (off heating function) [4]					
Storage Temperature	-20°C ~ 53°C (3 months) 10°C ~ 40°C (1 year)					
Ingress Protection	IP65					
Protection Class	I					

Continued on the next page

Module	T-BAT HS20.0	T-BAT HS22.2	T-BAT HS25.0	T-BAT HS27.5	T-BAT HS30.0	T-BAT HS32.5
Nominal Voltage (Vdc)	409.6	460.8	512	563.2	614.4	665.6
Operating Voltage (Vdc)	360-465	450-522	450-580	495-636	540-695	585-750
Nominal Capacity (Ah) [1]	50	50	50	50	50	50
Nominal Energy (kWh) [1]	20.48	23.04	25.60	28.16	30.72	33.28
Usable Energy 90% DOD (kWh) [2]	18.4	20.7	23.0	25.3	27.6	30.0
Max. Charge/Discharge Current (A) [3]	45	45	45	45	45	45
Recommend Charge/ Discharge Current (A) [5]	45	45	45	45	45	45
Standard Power (kW)	12.3	13.8	15.4	16.9	18.4	20.0
Max. Power (kW)	18.432	20.736	23.04	25.344	27.648	29.952
Short-circuit Current (A)	1900	1900	1900	1900	1900	1900
Battery Round-trip Efficiency (0.2 C, 25°C)	95%					
Expected Lifetime (25°C)	10 years					
Cycle Life 90% DOD (25°C)	6000 cycles					
Charge Temperature	-30°C ~ 53°C (on heating function); 0°C ~ 53°C (off heating function) [4]					
Discharge Temperature	-30°C ~ 53°C (on heating function); -20°C ~ 53°C (off heating function) [4]					
Storage Temperature	-20°C ~ 53°C (3 months) 10°C ~ 40°C (1 year)					
Ingress Protection	IP65					
Protection Class	I					

*Note:

1. Test conditions: 100% DOD, 0.2 C charge & discharge @ +25°C.
2. 90% DOD; System usable energy may vary with inverter different setting.
3. Discharge: In case of battery cell's temperature range of -20°C~10°C and 45°C~53°C, the discharge current will be reduced; Charge: In case of battery cell's temperature range of 0°C~25°C and 45°C~53°C, the charge current will be reduced. Product charge or discharge power depends on the actual temperature of battery pack.
4. The battery can only be discharged and cannot be charged at the range of from -20°C to 0°C.
5. In case of a rated current of 30 A, the wire size of 5.5-6.5 mm^2 for cables (including grounding cable) is recommended; in case of a rated current of 45 A, the wire size of 8.5-9.5 mm^2 for cables (including grounding cable) is recommend.
6. In the allowable range, the relative humidity range should be between 5% and 95% RH. In the meantime, effective measures should be taken to prevent condensation.

3.5.2 T-BAT-SYS-HV-S36

- Configuration List

No.	Module	BMS	Battery Module	Nominal Energy (kWh)	Operating Voltage (Vdc)
1	T-BAT HS7.2	TBMS-MCS0800 × 1	TP-HS36 × 2	7.37	90-116
2	T-BAT HS10.8	TBMS-MCS0800 × 1	TP-HS36 × 3	11.06	135-174
3	T-BAT HS14.4	TBMS-MCS0800 × 1	TP-HS36 × 4	14.75	180-232
4	T-BAT HS18.0	TBMS-MCS0800 × 1	TP-HS36 × 5	18.43	225-290
5	T-BAT HS21.6	TBMS-MCS0800 × 1	TP-HS36 × 6	22.12	280-349
6	T-BAT HS25.2	TBMS-MCS0800 × 1	TP-HS36 × 7	25.80	315-406
7	T-BAT HS28.8	TBMS-MCS0800 × 1	TP-HS36 × 8	29.49	360-465
8	T-BAT HS32.4	TBMS-MCS0800 × 1	TP-HS36 × 9	33.18	405-522
9	T-BAT HS36.0	TBMS-MCS0800 × 1	TP-HS36 × 10	36.86	450-580
10	T-BAT HS39.6	TBMS-MCS0800 × 1	TP-HS36 × 11	40.55	495-636
11	T-BAT HS43.2	TBMS-MCS0800 × 1	TP-HS36 × 12	44.24	540-695
12	T-BAT HS46.8	TBMS-MCS0800 × 1	TP-HS36 × 13	47.92	585-750

- Performance

Module	T-BAT HS7.2	T-BAT HS10.8	T-BAT HS14.4	T-BAT HS18.0	T-BAT HS21.6	T-BAT HS25.2
Nominal Voltage (Vdc)	102.4	153.6	204.8	256	307.2	358.4
Operating Voltage (Vdc)	90-116	135-174	180-232	225-290	270-349	315-406
Nominal Capacity (Ah) [1]	72	72	72	72	72	72
Nominal Energy (kWh) [1]	7.37	11.06	14.75	18.43	22.12	25.80
Usable Energy 90% DOD (kWh) [2]	6.6	10.0	13.3	16.6	19.9	23.2
Max. Charge/Discharge Current (A) [3]	50	50	50	50	50	50
Recommend Charge/ Discharge Current (A) [5]	50	50	50	50	50	50
Standard Power (kW)	3.58	5.38	7.17	8.96	10.75	12.54
Max. Power (kW)	5.12	7.68	10.24	12.8	15.36	17.92
Short-circuit Current (A)	1850	1850	1850	1850	1850	1850
Battery Round-trip Efficiency (0.2 C, 25°C)	95%					
Expected Lifetime (25°C)	10 years					
Cycle Life 90% DOD (25°C)	6000 cycles					
Charge Temperature	-30°C ~ 53°C (on heating function); 0°C ~ 53°C (off heating function) [4]					
Discharge Temperature	-30°C ~ 53°C (on heating function); -20°C ~ 53°C (off heating function) [4]					
Storage Temperature	-20°C ~ 53°C (3 months) 10°C ~ 40°C (1 year)					
Ingress Protection	IP65					
Protection Class	I					

Continued on the next page

Module	T-BAT HS28.8	T-BAT HS32.4	T-BAT HS36.0	T-BAT HS39.6	T-BAT HS43.2	T-BAT HS46.8
Nominal Voltage (Vdc)	409.6	460.8	512	563.2	614.4	665.6
Operating Voltage (Vdc)	360-465	450-522	450-580	495-636	540-695	585-750
Nominal Capacity (Ah) [1]	72	72	72	72	72	72
Nominal Energy (kWh) [1]	29.49	33.18	36.86	40.55	44.24	47.92
Usable Energy 90% DOD (kWh) [2]	26.5	29.9	33.2	36.5	39.8	43.1
Max. Charge/Discharge Current (A) [3]	50	50	50	50	50	50
Recommend Charge/ Discharge Current (A) [5]	50	50	50	50	50	50
Standard Power (kW)	14.34	16.13	17.92	19.71	21.50	23.30
Max. Power (kW)	20.48	23.04	25.6	28.16	30.72	33.28
Short-circuit Current (A)	1850	1850	1850	1850	1850	1850
Battery Round-trip Efficiency (0.2 C, 25°C)	95%					
Expected Lifetime (25°C)	10 years					
Cycle Life 90% DOD (25°C)	6000 cycles					
Charge Temperature	-30°C ~ 53°C (on heating function); 0°C ~ 53°C (off heating function) [4]					
Discharge Temperature	-30°C ~ 53°C (on heating function); -20°C ~ 53°C (off heating function) [4]					
Storage Temperature	-20°C ~ 53°C (3 months) 10°C ~ 40°C (1 year)					
Ingress Protection	IP65					
Protection Class	I					

*Note:

1. Test conditions: 100% DOD, 0.2 C charge & discharge @ +25°C.
2. 90% DOD; System usable energy may vary with inverter different setting.
3. Discharge: In case of battery cell's temperature range of -20°C~10°C and 45°C~53°C, the discharge current will be reduced; Charge: In case of battery cell's temperature range of 0°C~25°C and 45°C~53°C, the charge current will be reduced. Product charge or discharge power depends on the actual temperature of battery pack.
4. The battery can only be discharged and cannot be charged at the range of from -20°C to 0°C.
5. In case of a rated current of 30 A, the wire size of 5.5-6.5 mm^2 for cables (including grounding cable) is recommended; in case of a rated current of 45 A, the wire size of 8.5-9.5 mm^2 for cables (including grounding cable) is recommend.
6. In the allowable range, the relative humidity range should be between 5% and 95% RH. In the meantime, effective measures should be taken to prevent condensation.

4 Preparation before Installation

4.1 Prerequisites

When assembling the system, avoid touching the battery terminals with any metal object or bare hands. According to the design principles, T-BAT SYS-HV will provide a safe and reliable energy. Improper operation and equipment damage may cause overheating and electrolyte leakage. Therefore, the above-mentioned safety precautions and warning information mentioned in this part shall be strictly observed. If you have any question, please contact customer service. The Chapter "2 Safety" does not contain the provisions of all laws and regulations at the place where the user located.

Before installation, make sure that the installation site meets the following conditions:

- The building can stand up to earthquakes;
- The site shall be over 0.62 miles away from the sea, to avoid damage caused by salt water and humidity;
- The floor shall be flat;
- No inflammable and explosive goods are placed within at least of 3 feet;
- The ambiance shall be shady and cool, away from heat sources and direct sunlight;
- The temperature and humidity remain at a constant level;
- The installation site requires less dust and dirt; and
- There are no corrosive gases, including ammonia and acid vapor.



NOTE!
If the ambient temperature exceeds the operating range, the battery pack will stop running to protect itself. The optimal temperature range for running is 15°C to 30°C. In the allowable range, the relative humidity range should be between 5% and 95% RH. Frequent exposure to harsh temperatures may deteriorate the performance and lifetime of the battery.

4.2 Safety Gear

Installation and maintenance personnel must operate according to applicable federal, state, and local regulations as well as industry standards regarding product installation. Personnel must wear safety gear as indicated below in order to avoid short circuit and personal injury.

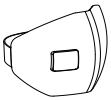

Anti-dust mask



Safety boots



Safety gloves



Safety goggles

4.3 Installation Tools

To install the T-BAT SYS-HV system, the following installation tools are required to be prepared.



Hammer drill

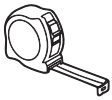

Measuring tape



Maker

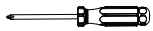

Cross screwdriver

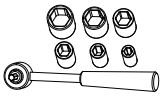

Torque wrench (M4)

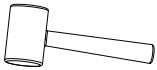

Rubber mallet



Spirit level

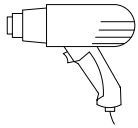

Heat gun



Wire stripper



Crimping tool for RJ45



Ø6mm Heat shrink tubing

4.4 Preparation

4.4.1 Check for Transport Damage

Ensure that the battery is intact during and after transportation. If there are damages, such as cracks, please contact your dealer immediately.

4.4.2 Unpacking

Remove the packing tape on the carton to open the battery package. Ensure that the battery modules and relevant items are complete. Check packing lists carefully according to the detailed packaging items in the section “4.4.3 Accessories“. If any accessory is missing, please immediately contact our company or your distributor.



CAUTION!
According to regional regulations, several people may be required for moving the equipment.



WARNING!
Strictly follow the installation steps. Our company will not be responsible for any injury or loss incurred by incorrect assembly and improper operation.



NOTE!
When installing the battery for the first time, the manufacturing date among battery modules should not exceed 3 months.

4.4.3 Accessory

BMS (TBMS-MCS0800)

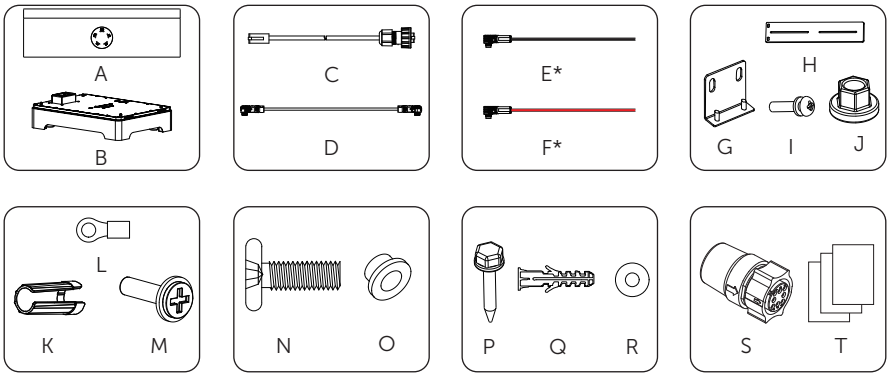

Accessories included are shown as follows:

Item No.	Description	Quantity
A	BMS	1
B	Base	1
C	Communication Cable (BMS port)	1
D	Short Power Cable (is plugged into the jack of BMS before delivery)	1
E*	Power Cable (Black)	1
F*	Power Cable (Red)	1
G	"L" Bracket	1
H	Adjustable Bracket	1
I	M4x10 Phillips-head Screw	2
J	M6 Flange Nut	2
K	Rotation Wrench	1
L	RNB4-5 Current Terminal	2
M	M4x20 Phillips-head Screw	2
N	M4x14 Phillips-head Screw	4
O	Gasket	4
P	Tapping Screw	2
Q	Expansion Bolt	2
R	Washer	2
S	Short-circuit Plug (It will be installed on the HEAT port before delivery)	1
T	Document	1

Note: The mark "" indicates that the connector connecting inverter on the power cables, connecting BMS and inverter, is delivered with the inverter's accessories kit.

Battery module (TP-HS25/TP-HS36)

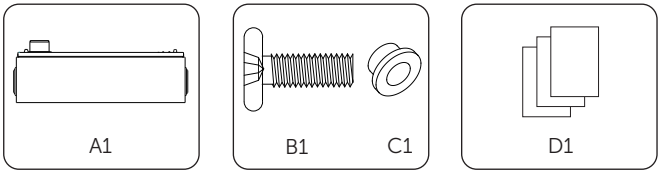

Accessories included are shown as follows:

Item No.	Description	Quantity
A1	Battery Module	1
B1	M4x14 Phillips-head Screw	4
C1	Gasket	4
D1	Document	1

Series Box

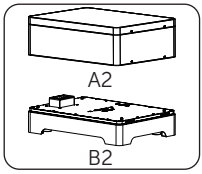

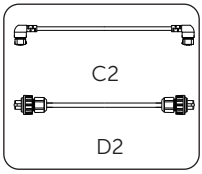

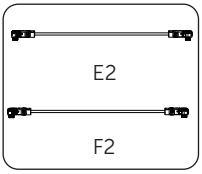

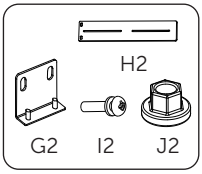

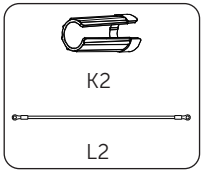

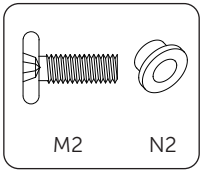

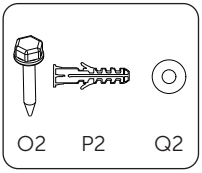

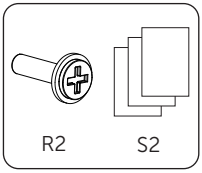

Accessories included are shown as follows:

Item No.	Description	Quantity
A2	Series Box	1
B2	Base	1
C2	Heater Cable (HEAT port)	1
D2	Communication Cable (COM port)	1
E2	Power Cable (Black)	1
F2	Power Cable (Red)	1
G2	"L" Bracket	1
H2	Adjustable Bracket	1
I2	M4x10 Phillips-head Screw	2
J2	M6 Flange Nut	2
K2	Rotation Wrench	1
L2	Grounding Cable	1
M2	M4x14 Phillips-head Screw	4
N2	Gasket	4
O2	Tapping Screw	2
P2	Expansion Bolt	2
Q2	Washer	2
R2	M4x20 Phillips-head Screw	1
S2	Document	1

*Note:

- If the battery module purchased excesses 10 sets (including 10), these battery modules should be installed in two towers, and the "Series Box" should be installed to connect two towers in series.
- If the battery module purchased is less than 9 sets (including 9), these battery modules may be installed in one or two towers. In case of two towers, the "Series Box" is recommended to install.
- Additionally, the above accessories kit for "Series Box" needs to be purchased by customers themselves.

5 Equipment Installation

5.1 Installation Environment Requirements

- Ensure that the equipment is installed in a well ventilated environment;
- To prevent fire due to high temperature, ensure that the ventilation vents or heat dissipation system are not blocked when the equipment is running;
- Do not expose the equipment to flammable or explosive gas or smoke. Do not perform any operation on the equipment in such environments;
- Ensure that the area is completely waterproof, and the floor is flat and level; and
- Ensure that the temperature and humidity are maintained at a constant level, and there is minimal dust and dirt in the area.

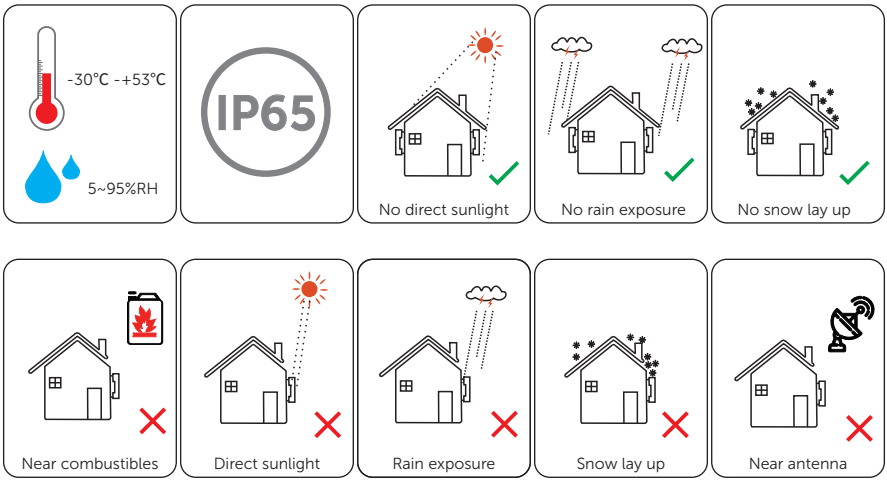

5.2 Installation Procedure

*Note:

1. Up to 9 battery modules can be installed in one tower. If the battery module users purchased excesses 10 sets (including 10), a Series Box needs to be installed to connect two towers in series.

2. The bearing capacity of the ground which is used to install the whole battery system must be over 500 kg/m².

Installation steps without Series Box

Take the installation procedure for four battery modules as an example.

Step 1. Take out Base, and adjust it.

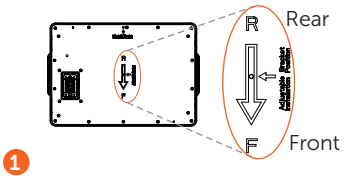

1

The letters "R" and "F" on the Base indicate rear and front respectively. The side with "R" shall be against the wall.

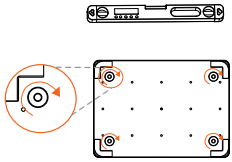

2

Turn clockwise, lower the Base;
Turn anti-clockwise, raise the Base.
A spirit level is recommended to use.

Remove dust cover

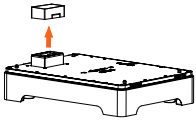

3

Step 2. Locate Base, and accurately draw the location on both sides with a marker. A spirit level is recommended to use.

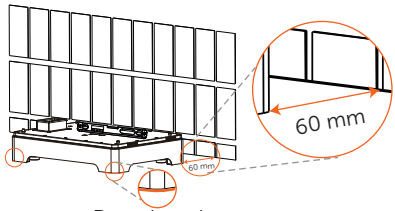

Draw location

*Note: The distance between the Base and the wall can be about 20~200 mm, but the recommended distance is 60 mm.

Step 3. Place one battery module on the Base.

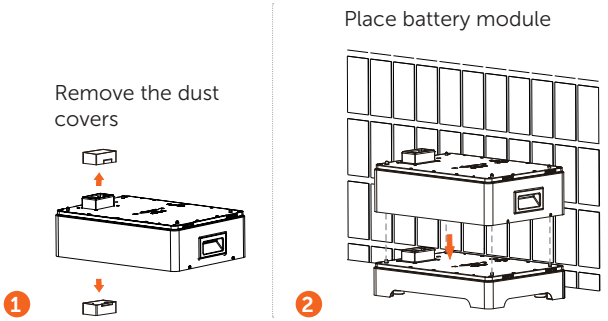

*Note: If the Base is shifted after placing battery module, move it to its original location according to the mark previously drawn.

Step 4. Secure and tighten M4x20 Phillips-head screws (× 4) on both sides (Torque: 0.9 to 1.1 N·m).

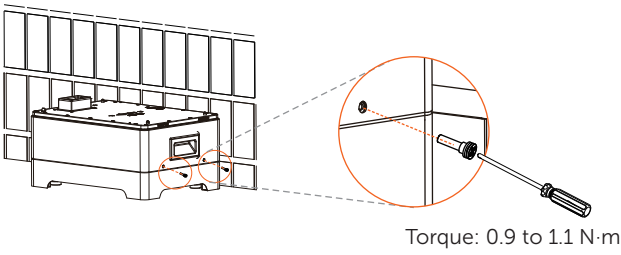

Right Side View

Step 5. Repeat the Steps 3 and 4 to install the rest of battery modules.

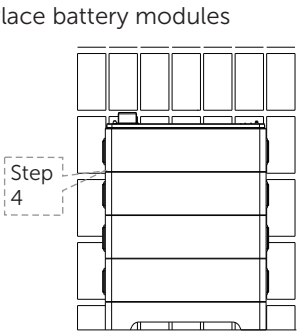

Step 6. Join Adjustable bracket and “L” bracket with M6 Flange nuts (× 2).

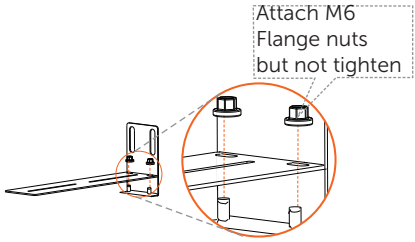

Step 7. Secure the assembled bracket on the battery module and wall.

Attach the assembled bracket on the battery module with M4x10 Phillips-head screws (× 2), but not tighten.

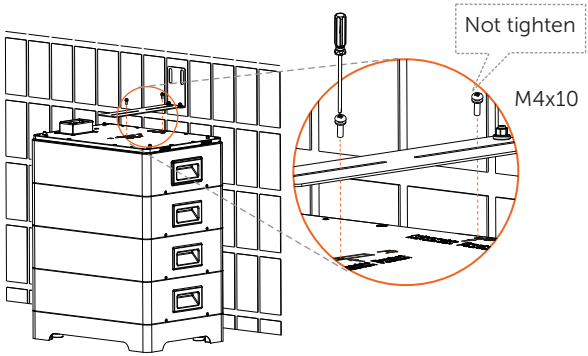

Move the assembled bracket to the wall;
Circle along the inner ring of holes;
Remove the assembled bracket, and drill the two holes (at least 50 mm) by a Drill (Ø 10 mm).

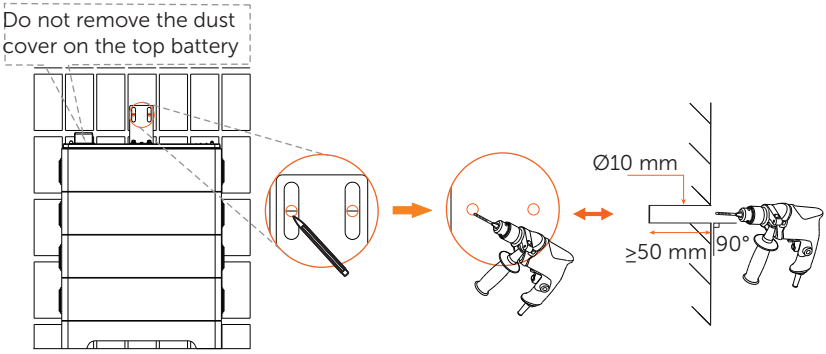

Remove the assembled bracket;
Insert Expansion bolts (× 2)

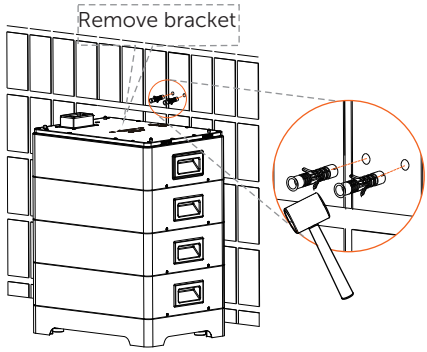

Secure the assembled bracket to the wall with Tapping screws (× 2) and Washer (× 2), and tighten them (Torque: 4 N·m);
Secure the assembled bracket on the battery module with M4x10 Phillips-head screws (× 2), and tighten them (Torque: 0.9 to 1.1 N·m);
Tighten the M6 Flange nuts (× 2) (please refer to the Step 6) (Torque: 5 N·m).

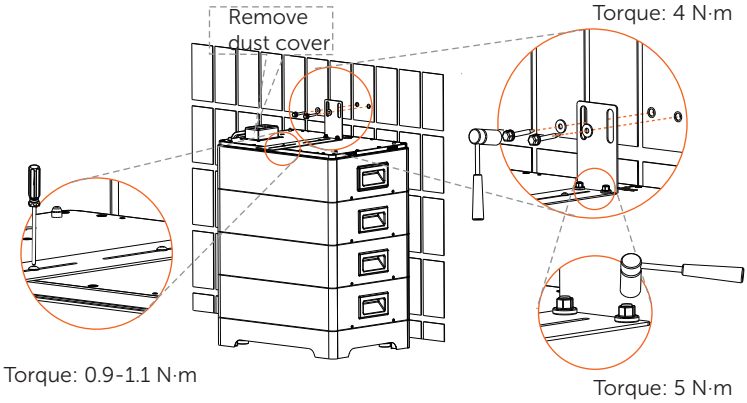

Step 8. Place BMS, and tighten M4x14 Phillips-head screws (× 2) on both sides (Torque: 0.9 to 1.1 N·m)

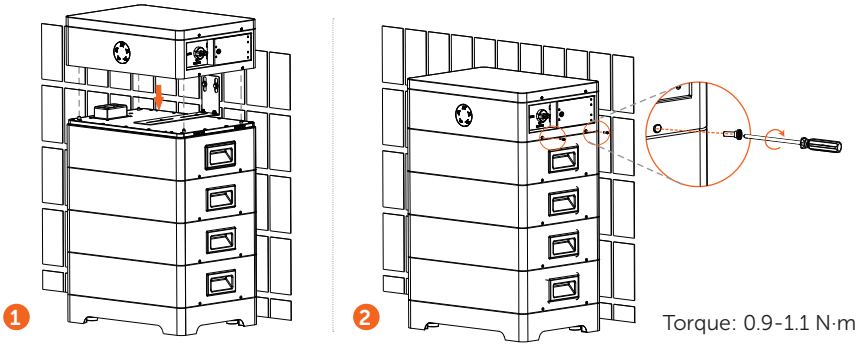

*Note: Regarding the cover plate on both sides of the BMS, they should be installed after finishing wiring.

Installation steps with Series Box

In case of more than 10 sets of battery module (including 10), a Series Box needs to be installed to connect two towers in series, and an accessories kit for Series Box will not deliver for free.

The installation procedure for these two towers is the same as that for one tower. For details, please refer to the Step 1 to 8.

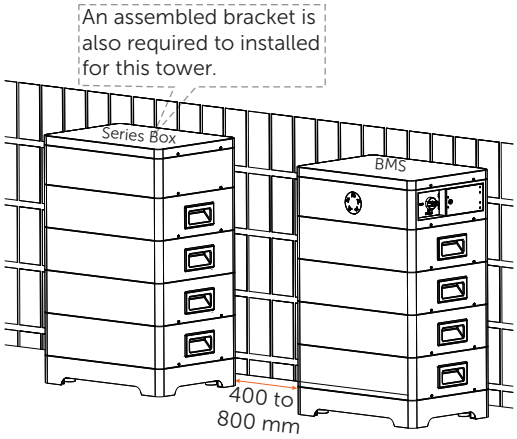

*Note:

1. The rule for the sequence of battery modules in the whole system is as follows: In the case of one tower, the battery module closest to the BMS is numbered the first battery module, followed by the second battery module, the third battery module, according to the top-down principle. If another tower exists, the battery module closest to the “Series Box” can be continued numbering based on the tower with the BMS.
2. Regarding the cover plates on both sides of the BMS and the left side of the Series Box, they should be installed after finishing wiring.

6 Wiring

Current terminal connection and communication cable, connecting BMS and inverter, shall be made before conducting wiring.

6.1 Current Terminal Connection

The steps for making current terminal connection are shown as follows:

Step 1. Strip the cable jacket about 8 to 10 mm from the end;

Step 2. Cut the heat-shrink tubing to about 28 to 30 mm long, carefully slide it onto the end of the cable, and then carefully slip the wires all the way into the current terminal;

Step 3. Crimp the terminal, and heat the heat-shrink tubing after it wraps the end of terminal;

Step 4. Connect the assembled grounding cable to BMS, and then tighten the screw.

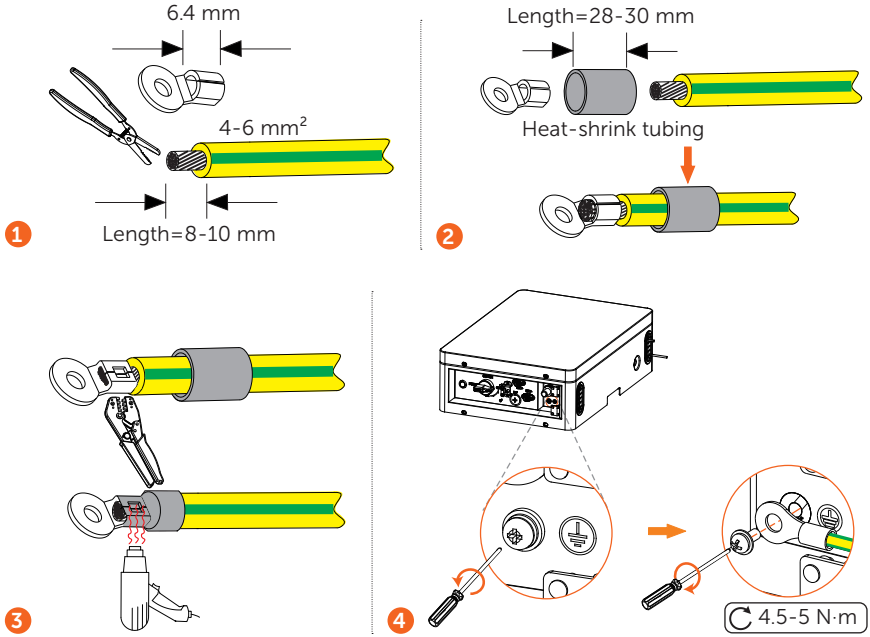

*Note: The grounding cable should be prepared by the users themselves.

6.2 Communication Connection (connecting to inverter)

To ensure normal operation of BMS and inverter, the BMS communication cable delivered with the BMS accessories kit is required to connect RJ45 connector.

The specific definition of the communication cable is shown as follows:

PIN	1	2	3	4	5	6	7	8
BMS	/	GND	GND	BMS_H	BMS_L	12V	A1	B1

The wire sequence of one terminal connecting to the inverter is the same as the wire sequence of the other terminal, connecting to the BMS.

The wire sequence is shown as follows:

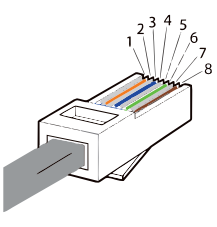

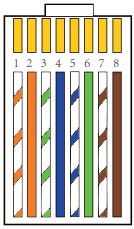

1) White with orange stripes
2) Orange
3) White with green stripes
4) Blue
5) White with blue strips
6) Green
7) White with brown stripes
8) Brown

The steps for making RJ45 connector to BMS communication cable are shown as follows:

Step 1. Strip the cable jacket about 15 mm down from the end;

Step 2. Carefully insert the wires all the way into the RJ45 connector, making sure that each wire passes through the appropriate guides inside the connector;

Step 3. Push the RJ45 inside the crimping tool and squeeze the crimper all the way down.

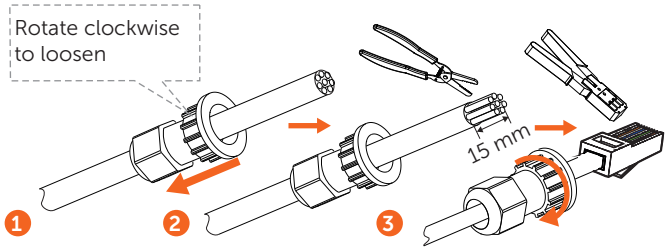

*Note: The BMS communication cable shall have a shield layer.

6.3 Cable Connection

Before wiring, please:

Step 1. Remove the screws on both covers of the BMS,

Step 2. Press the cover;

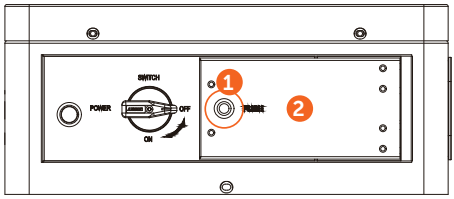

*Note: Remove the silicone sleeves from the ports of BMS and Series Box (if any).

6.3.1 Wiring without Series Box

*Note: Please remove the labels attached to both cover plates before conducting wiring.

Left side of BMS

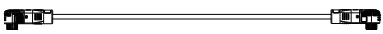

Short power cable: Connect “B+“ and “B-“

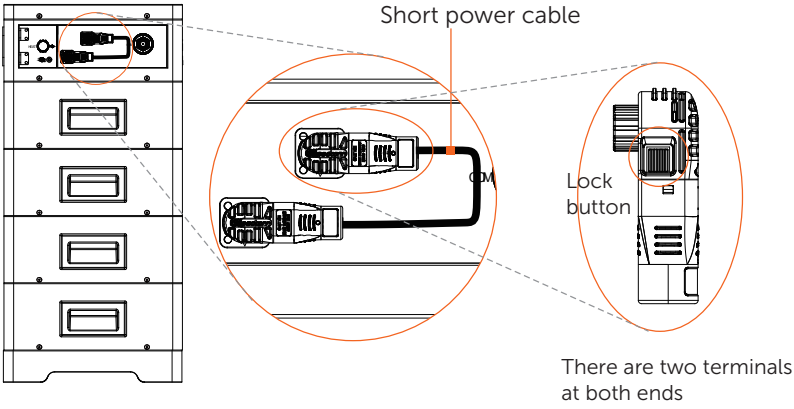

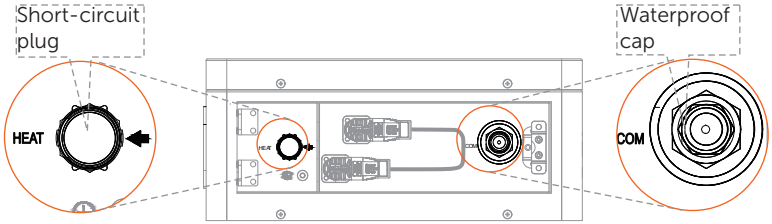

*Note: In case of one tower, a waterproof cap shall be put on the unconnected COM port, as well as a short-circuit plug on the unconnected HEAT port.

Right side of BMS (BMS to inverter)



Power cable (black): Connect BAT- of BMS to BAT- of inverter



Power cable (red): Connect BAT+ of BMS to BAT+ of inverter

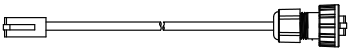

Communication cable: Connect BMS port of BMS to BMS port of inverter

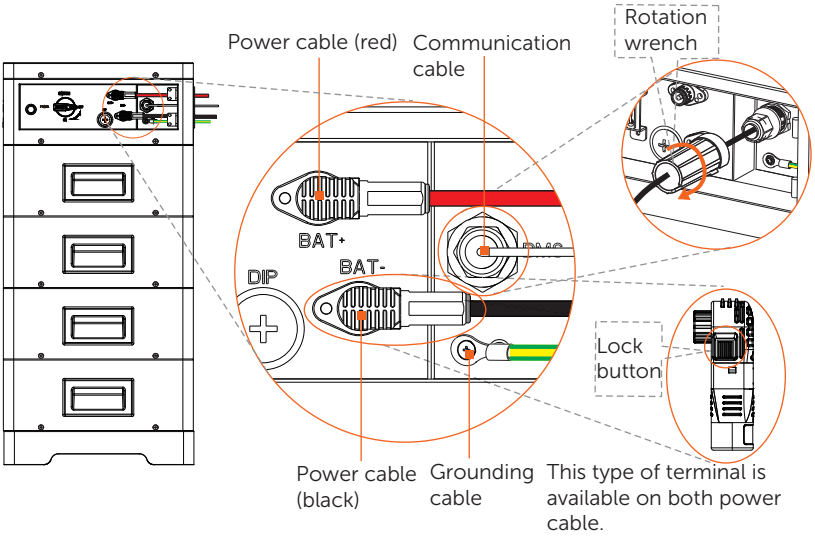

*Note:

1. Press and hold the lock button while unplugging the power cable, or it cannot be pulled out.
2. Use the rotation wrench to tighten the communication cable, and remove it after tightening.

Installation of Cover Plate

After finishing wiring, there are two cover plates on both sides of the BMS that need to be secured with M4 screws (× 2) (Torque: 0.9 to 1.1 N·m).

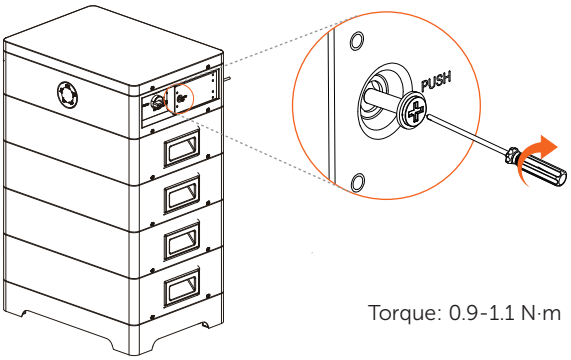

6.3.2 Wring with Series Box

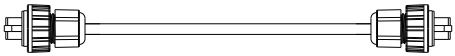

Communication cable: There are two terminals at both ends; one connects to COM port of BMS, and the other connects to COM port of Series Box.



Heater cable: There are two terminals at both ends; one connects to HEAT port of BMS, and the other connects to HEAT port of Series Box.



Power cable (black): There are two terminals with the same function at both ends; one connects to BAT- of BMS, and the other connects to BAT- of Series Box.



Power cable (red): There are two terminals with the same function at both ends; one connects to BAT+ of BMS, and the other connects to BAT+ of Series Box.

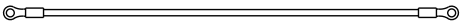

Grounding cable: There are two terminals at both ends; one connects to a grounding port of BMS, and the other connects to the grounding port of Series Box.

Wiring between BMS and Series Box

*Note: Please remove the labels attached to both cover plates before conducting wiring.

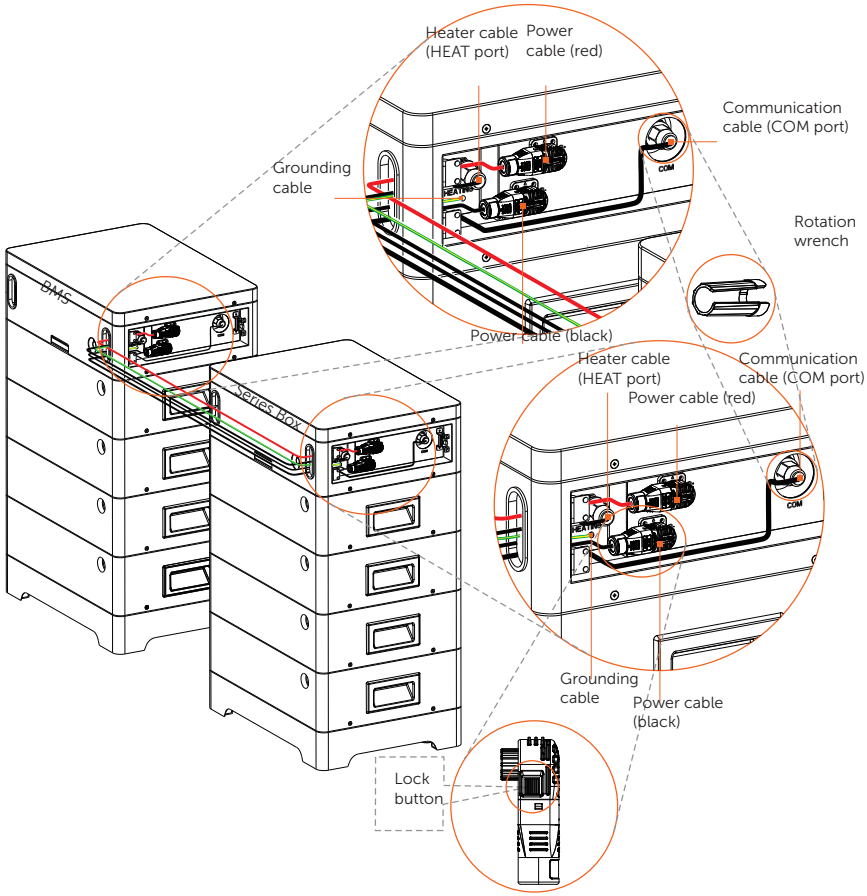

*Note: A corrugated pipe with an inner diameter of over 45 mm is recommended for use to keep cable insulation in place and avoid potential damages.

Before wiring, the short-circuit plug on the HEAT port should be removed. And after finishing wiring, please make sure that the heater cable is locked.

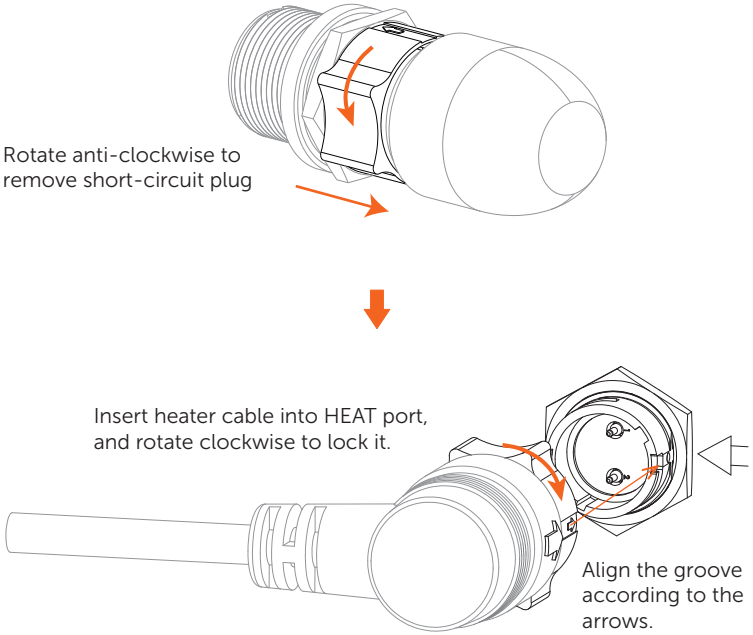

Right side of BMS

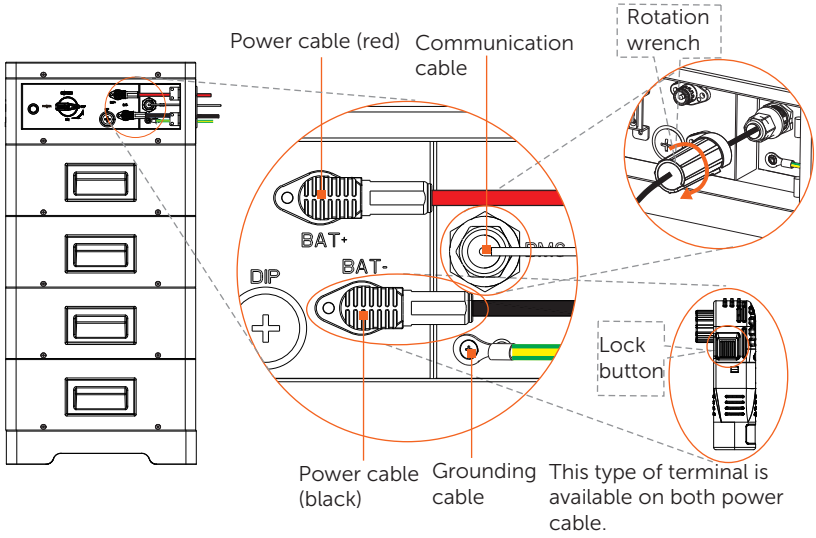

*Note:

1. Press and hold the lock button while unplugging the power cable, or it cannot be pulled out.
2. Use the rotation wrench to tighten the communication cable, and remove it after tightening.
3. After finishing wiring, correctly insert and tighten M4 screws to secure cover plates on both the BMS and Series Box according to the "Installation of Cover Plate".

7 Commissioning

7.1 DIP Switch

DIP Switch is equipped on BMS. See figure below.

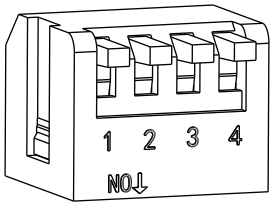

	Description
DIP switch 1	A reserved function
DIP switch 2	A reserved function
DIP switch 3	A reserved function
DIP switch 4	Terminal resistance *Note: ■ The DIP switch 4 shall be flipped down (open the circuit) when connecting BMS to inverter; ■ In case of parallel connection, only shall be the DIP switch 4 on the last BMS be flipped down (open the circuit), and the DIP switch 4 on the rest of BMS shall be flipped up (close the circuit).

The DIP switch 4 is pressed at the factory settings.

*Note: To adjust the DIP switch, a small flat-head screwdriver shall be prepared by users themselves.

7.2 Start and Shutdown Procedure

Before commissioning, please check to ensure that, the installed battery modules are the same model, and all the grounding cables, power cables, communication cables, and heater cable are connected.

Power on

Step 1. Rotate the SWITCH to ON;

Step 2. Press the POWER button for more than 0.5 seconds to start system. See figure below.

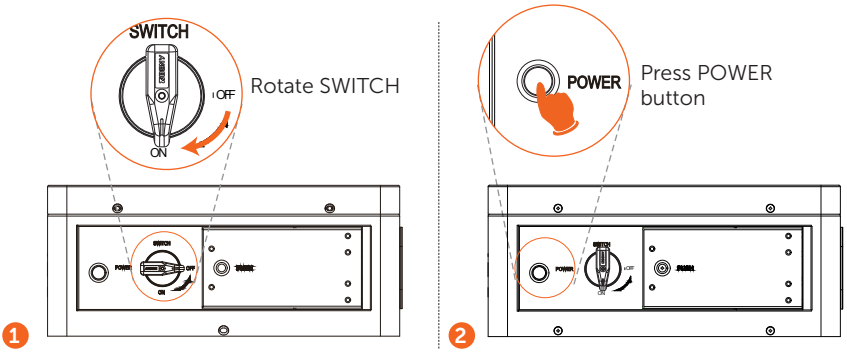

*Note:

- Frequently pressing the POWER button may cause a system error.
- If the system does not start after pressing POWER button, please try again in at least 10 seconds.

Power off

Step 1. Rotate the SWITCH to OFF;

Step 2. Press the POWER button for 1 second to shut down system. See figure below.

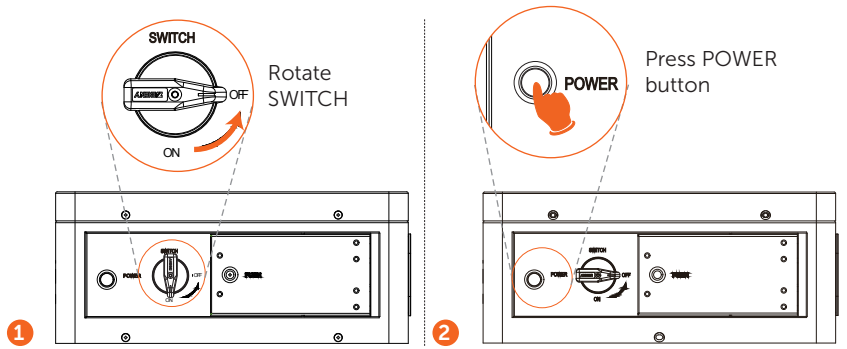

7.3 Status Indicators

The power indicators show the current battery percentage. There are five indicators on the BMS, one status light and four SOC power indicators. See figure below:

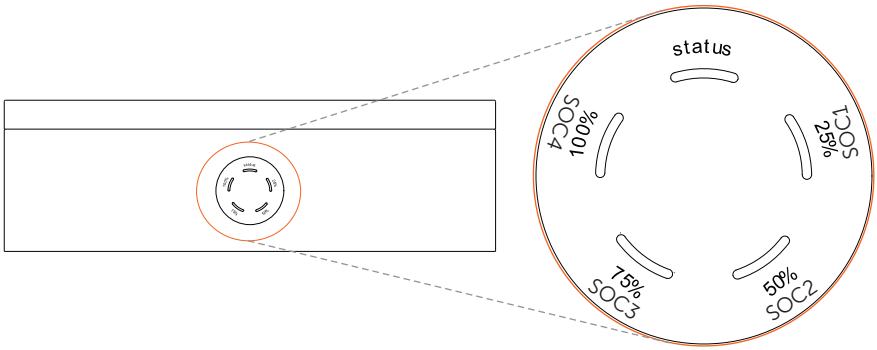

For the derailed information on indicators, see the table below:

Status	Description
Startup	After pressing the POWER button to start the system, the status light flashes yellow for 0.1 second and turns off for 0.1 second, and all the SOC power indicators are off.
Shutdown	After pressing and holding the POWER button for more than 1 second, the status light comes on solid green light, and the SOC power indicators flash blue in turn by clockwise. Then all lights are off within 2.4 seconds after releasing the button.
Standby	The status light flashes green for 1 second and turns off for 4 seconds. The SOC power indicators are off.
Charging	The status light comes on solid green light, and the state of SOC power indicators depends on the actual situation. For details, refer to the following "Table 1 Indicator information while charging".
Discharging	The status light comes on solid green light, and the state of SOC power indicators depends on the actual situation. For details, refer to the following "Table 2 Indicator information while discharging".
Fault	In case of failure, the status light will remain on solid red light for 10 minutes, and then such red light will flash for 1 second and then turn off for 4 seconds.
Warning	In case of warning, the status light will flash yellow light for 1 second, and then turn off for 4 seconds.
Black Start	For details, refer to the part of "Black Start".

Table 1: Indicator information while charging

SOC value	Status light	SOC1	SOC2	SOC3	SOC4
0% ≤ SOC < 25%	Green	Flash	Light off	Light off	Light off
SOC < 50%	Green	Light on	Flash	Light off	Light off
SOC < 75%	Green	Light on	Light on	Flash	Light off
SOC < 100%	Green	Light on	Light on	Light on	Flash
SOC ≥ 100%	Green	Light on	Light on	Light on	Light on

Table 2: Indicator information while discharging

SOC value	Status light	SOC1	SOC2	SOC3	SOC4
SOC ≥ 75%	Green	Flash	Flash	Flash	Flash
SOC ≥ 50%	Green	Flash	Flash	Flash	Light off
SOC ≥ 25%	Green	Flash	Flash	Light off	Light off
SOC ≥ 0%	Green	Flash	Light off	Light off	Light off

In case of pressing and holding POWER button, there are two circumstances as follows:

1. Press and hold POWER button for more than 5 seconds but not less than 20 seconds, the system will enter a startup mode of inverter.

2. Press and hold POWER button for more than 20 seconds, the system will enter the Black Start.

Black Start

The equipment can provide Black Start capacity, meaning that our energy storage inverter and battery can continue to run even if the power grid and photovoltaic panel are out of service. The startup procedure for Black Start is as follows:

- In case of pressing and holding the POWER button for less than 20 seconds, the status light will flash green light for 1 second and then turn off for 4 seconds, with a period of 5 seconds.
- After pressing and holding the POWER button for more than 20 seconds (including 20 seconds), the status light will come on solid green light, and SOC power indicators will flash as follows:
- Firstly, the indicator SOC3 comes on green, and the rest of indicators are off;
- Secondly, the indicators SOC2 and SOC4 come on green, and the rest of indicators are off;
- Thirdly, the indicator SOC1 comes on green, and the rest of indicators are off;
- Finally, all power indicators are off.

The POWER button should be released at anytime in the process.

The power indicators will change according to the actual situation, with details as below:

Fault	SOC1	SOC2	SOC3	SOC4
Huge differential pressure	Flash	Off	Off	Off
Voltage fault (undervoltage and overvoltage of unit, overvoltage and undervoltage of total voltage)	Off	Flash	Off	Off
Temperature fault (high temperature, low temperature)	Flash	Flash	Off	Off
Current fault (overcurrent charging, overcurrent discharging)	Off	Off	Flash	Off
Hardware fault (MCU fault, external short circuit fault, AFE fault, voltage sampling disconnection fault, temperature sampling,or current sensor default)	Flash	Off	Flash	Off
Relay fault	Off	Flash	Flash	Off
Insulation fault	Flash	Flash	Flash	Off
Self test fault	Off	Off	Off	Flash
Communication loss of inverter	Flash	Off	Off	Flash
Communication loss of battery module	Off	Flash	Off	Flash

8 Troubleshooting

Check the indicators (refer to the "7.3 Status Indicators") to determine the status of T-BAT SYS-HV.

In case the following circumstance occurs, for instance, voltage or temperature exceeding the limit, a warning state will be triggered.

T-BAT system's BMS will periodically report its operating state to inverter.

In case the T-BAT SYS-HV exceeds the specific limit, it will enter a warning state. And if the warning is reported, the inverter will stop working immediately.

Please use the monitoring software on the inverter to check the cause of warning.

The possible error information is shown as follows:

Error	Description	Diagnosis & Solution
BMS_External_Err	External fault of BMS	Unable to establish communication with inverter: ▪ Restart BMS; ▪ Contact the company's after-sales personnel.
BMS_Internal_Err	Internal fault of BMS	Unable to establish communication with inverter: ▪ Restart BMS; ▪ Check whether the connection among batteries is normal; ▪ Contact the company's after-sales personnel.
BMS_OverVoltage	BMS overvoltage	Overvoltage of single battery. ▪ Contact the company's after-sales personnel.
BMS_LowerVolatge	BMS undervoltage	Undervoltage of single battery. ▪ Battery is forced to charge through inverter; ▪ Contact the company's after-sales personnel.
BMS_ChargeeOverCurrent	Overcurrent charging of BMS	Overcurrent charging of BMS. ▪ Restart BMS; ▪ Contact the company's after-sales personnels.
BMS_DischargeOverCurrent	Discharge overcurrent of BMS	Discharge overcurrent of BMS. ▪ Restart BMS; ▪ Contact the company's after-sales personnel.
BMS_TemHigh	High temperature of BMS	The temperature of BMS is too high. ▪ Let BMS cool down to normal temperature and restart; ▪ Contact the company's after-sales personnel.

BMS_TemLow	Low temperature of BMS	The temperature of BMS is too low. Warm up BMS and restart; Contact the company's after-sales personnel.
BMS_CellImbalance	Cell imbalance of BMS	Inconsistency of battery. ▪ Restart BMS; ▪ Contact the company's after-sales personnel.
BMS_Hardware_Protect	Hardware protection of BMS	Hardware protection of BMS. ▪ Restart BMS; ▪ Contact the company's after-sales personnel.
BMS_Circuit_Fault	Circuit fault	Circuit fault of BMS. ▪ Restart BMS; ▪ Contact the company's after-sales personnel.
BMS_Insulation_Fault	Insulation fault	Insulation fault of BMS. ▪ Restart BMS; ▪ Contact the company's after-sales personnel.
BMS_VoltSensor_Fault	Voltage sensor fault	Voltage sampling fault of BMS. ▪ Restart BMS; ▪ Contact the company's after-sales personnel.
BMS_TempSensor_Fault	Temperature sensor fault	Temperature sampling fault of BMS. ▪ Restart BMS; ▪ Contact the company's after-sales personnel.
BMS_TempSensor_Fault	Current sensor fault	Current sampling fault of BMS. ▪ Restart BMS; ▪ Contact the company's after-sales personnel.
BMS_Relay_Fault	Relay fault	Relay contact adhesion fault of BMS. Restart BMS;
BMS_Type_Unmatch	BMS type matching error	Different type of BMS. ▪ Restart BMS; ▪ Contact the company's after-sales personnel.
BMS_Version_Unmatch	BMS version matching error	Different type of BMS. ▪ Restart BMS; ▪ Contact the company's after-sales personnel.
BMS_Manufacturer_Unmatch	BMS manufacturer matching error	Different type of BMS. ▪ Restart BMS; ▪ Contact the company's after-sales personnel.

BMS_SW&HW_Unmatch	Software and hardware mismatch error of BMS	Different type of BMS. ▪ Restart BMS; ▪ Contact the company's after-sales personnel.
BMS_M&S_Unmatch	BMS and battery module mismatch error	Different type of BMS. ▪ Restart BMS; ▪ Contact the company's after-sales personnel.
BMS_CR_Unresponsive	Charging request not respond	Inverter does not respond the charging request. ▪ Restart BMS or inverter; ▪ Contact the company's after-sales personnel.
S_Software_Protect	Software protection of battery module	Software protection of battery module. ▪ Restart BMS; ▪ Contact the company's after-sales personnel.
BMS_536_Fault	536 fault of BMS	BMS voltage sampling fault. ▪ Restart BMS; ▪ Contact the company's after-sales personnel.
BMS_Selfchecking_Fault	Self-test fault of BMS	Self-test fault of BMS. ▪ Restart BMS; ▪ Contact the company's after-sales personnel.
BMS_Tempdiff_Fault	Temperature different fault	BMS temperature varies greatly. ▪ Restart BMS; ▪ Contact the company's after-sales personnel.
BMS_Break	Disconnection fault of BMS	BMS sampling fault. ▪ Restart BMS; ▪ Contact the company's after-sales personnel.
BMS_Flash_Fault	Flash fault of BMS	Memory chip fault. ▪ Restart BMS; ▪ Contact the company's after-sales personnel.
BMS_Precharge_Fault	BMS precharge fault	External short circuit of BMS. ▪ Check the external connection and restart BMS; ▪ Contact the company's after-sales personnel.
BMS_AirSwitch_Break	Disconnection of switch break of BMS	Disconnection of switch break of BMS. ▪ Restart BMS; ▪ Contact the company's after-sales personnel.

9 Decommissioning

9.1 Dismantling Battery

Shutting down battery unit:

- Disconnect the cables between BMS and inverter;
- Disconnect the series wiring terminal on the battery;
- Disconnect the cables.

9.2 Packing

Pack the BMS and battery module in the original packaging.

If the original packaging is no longer available, use an equivalent carton or box that meets the following requirements:

- Suitable for loads over 70.00 kg;
- Properly closed and sealed.

10 Maintenance

- If the ambient temperature for storage is -20°C~50°C, recharge the batteries at least once every 3 months.
- If the ambient temperature for storage is 0°C~40°C, recharge the batteries at least once every 12 months.
- If the battery(ies) has(have) not been used for more than 9 months, the battery(ies) must be charged to at least SOC 50% each time.
- For the first installation, the interval among manufacture dates of batteries shall not exceed 3 months.
- If a battery is replaced or added for capacity expansion, each battery's SOC should be consistent. The max. SOC difference should be between ±5%.
- If users want to increase their battery system capacity, please ensure that the SOC of the existing system capacity is about 40%. The manufacturer date of the new battery shall not exceed 6 months; in case of exceeding 6 months, please charge the new battery to around 40%.
- In the allowable range, the relative humidity range should be between 5% and 95%RH.

11 Disclaimer

Triple Power protects the product under warranty when it is installed and used as listed in the Manual. Violation of the installation procedure or use of the product in any way not described in the Manual will immediately void all warranties on the product.

Triple Power does not provide warranty coverage or assume any liability for direct or indirect damages or defects that result from the following causes:

- Force majeure (flooding, lightning strike, overvoltage, fire, thunderstorm, etc.);
- Improper or non-compliant use;
- Improper installation, commissioning, start up or operation (contrary to the guidance described in the Installation Manual delivered with the product);
- Inadequate ventilation and circulation resulting in minimized cooling and natural air flow;
- Installation in a corrosive environment;
- Damage during transportation;
- Unauthorized repair attempts;
- Failure to adequately maintain the equipment. An on-site inspection should be carried out by a qualified technician after 120 months of continuous use. If more than 120 months have been passed since the date of commissioning, or the user cannot prove that the equipment has been adequately maintained, the warranty claim may be refused by the company;
- External influence including unusual physical or electrical stress (power failure surges, inrush current, etc.);
- Use of an incompatible inverter or devices;
- Connect to other brands of inverter without authority from the company.