Operating manual



SUNNY TRIPOWER HYBRID X 5 / 6 / 8 / 10 / 12 / 15

STPH5-60 / STPH6-60 / STPH8-60 / STPH10-60 / STPH12-60 / STPH15-60

ENGLISH

STPHxx-60-BE-en-11 | Version 1.1

Legal Provisions

The information contained in these documents is the property of SMA Solar Technology AG. No part of this document may be reproduced, stored in a retrieval system, or transmitted, in any form or by any means, be it electronic, mechanical, photographic, magnetic or otherwise, without the prior written permission of SMA Solar Technology AG. Internal reproduction used solely for the purpose of product evaluation or other proper use is allowed and does not require prior approval.

SMA Solar Technology AG makes no representations or warranties, express or implied, with respect to this documentation or any of the equipment and/or software it may describe, including (with no limitation) any implied warranties of utility, merchantability, or fitness for any particular purpose. All such representations or warranties are expressly disclaimed. Neither SMA Solar Technology AG nor its distributors or dealers shall be liable for any indirect, incidental, or consequential damages under any circumstances.

The exclusion of implied warranties may not apply in all cases under some statutes, and thus the above exclusion may not apply.

Passwords managed by this SMA product are always stored encrypted.

Specifications are subject to change without notice. Every attempt has been made to make this document complete, accurate and up-to-date. Readers are cautioned, however, that product improvements and field usage experience may cause SMA Solar Technology AG to make changes to these specifications without advance notice or per contract provisions. SMA Solar Technology AG shall not be responsible for any damages, including indirect, incidental or consequential damages, caused by reliance on the material presented, including, but not limited to, omissions, typographical errors, arithmetical errors or listing errors in the content material.

SMA Warranty

You can download the current warranty conditions from the Internet at www.SMA-Solar.com.

Trademarks

All trademarks are recognized, even if not explicitly identified as such. Missing designations do not mean that a product or brand is not a registered trademark.

SMA Solar Technology AG

Sonnenallee 1

34266 Niestetal

Germany

Tel. +49 561 9522-0

www.SMA.de

E-mail: info@SMA.de

Status: Friday, September 4, 2026

Copyright © 2026 SMA Solar Technology AG. All rights reserved.

Table of Contents

1 Information on this Document 7
1.1 Validity 7
1.2 Target Group 7
1.3 Content and Structure of this Document 7
1.4 Levels of Warning Messages 7
1.5 Symbols in the Document 8
1.6 Typographies in the document 8
1.7 Designations in the Document 8
1.8 Additional Information 8

2 Safety 10
2.1 Intended Use 10
2.2 IMPORTANT SAFETY INSTRUCTIONS 11

3 Scope of Delivery 16

4 Product overview 18
4.1 Device function 18
4.2 Product Description 18
4.3 Symbols on the Product 19
4.4 Sunny Tripower Hybrid X as System Manager 20
4.5 Interfaces and Functions 20
4.5.1 User Interface 20
4.5.2 Device Key (DEV KEY) 21
4.5.3 Diagnostic function 21
4.5.4 Digital inputs 21
4.5.5 Increased self-consumption 21
4.5.6 Energy Monitoring 21
4.5.7 SMA Premium 21
4.5.8 Energy Maximizer 22
4.5.9 Energy Planner 22
4.5.10 Peak load shaving 22
4.5.11 Modbus 22
4.5.12 Multifunction relay (MFR) 23
4.5.13 Grid Management Services 23
4.5.14 Battery-backup function 23
4.5.15 Secure Power Supply Operation 23
4.5.16 Fast stop function 24
4.5.17 Protective Battery Charging 24
4.5.18 SMA ArcFix 24
4.5.19 SMA PUK 2.0 24
4.5.20 SMA Dynamic Power Control 25
4.5.21 SMA ShadeFix 25
4.5.22 SMA Smart Connected 25
4.5.23 SMA Speedwire 25
4.5.24 Wi-Fi connection to SMA 360° app and SMA Energy app 25
4.5.25 Wi-Fi 25
4.6 LED Signals 26

5 Mounting 27
5.1 Requirements for Mounting 27
5.1.1 Requirements for the Mounting Location 27
5.1.2 Permitted and prohibited mounting positions 27

5.1.3 Dimensions for Mounting ... 28
5.1.4 Recommended clearances for mounting ... 28
5.2 Mounting the Inverter ... 29

6 Electrical Connection ... 31
6.1 Requirements for the electrical connection ... 31
6.1.1 Permitted grid configurations ... 31
6.1.2 Equipotential Bonding ... 31
6.1.3 Residual-current monitoring unit (RCMU) ... 32
6.1.4 Overvoltage category ... 32
6.1.5 Requirements for the PV modules per input ... 32
6.1.6 Load-break switch and cable protection ... 32
6.1.7 Cable Requirements ... 33
6.1.7.1 AC cable requirements ... 33
6.1.7.2 Requirements for the PV cables ... 33
6.1.7.3 Requirements for signal cables for backup operation, multifunction relay (MFR), and fast stop ... 33
6.1.7.4 Requirements on the SPS OUT AC cable for connection to the inverter ... 33
6.1.7.5 Network cable requirements ... 34
6.1.7.6 Battery Communication Cable Requirements ... 34
6.1.7.7 Requirements for the Battery Power Cables ... 34
6.1.7.8 Requirements for the grounding cable for additional protective grounding ... 35
6.2 Overview of the Connection Area ... 35
6.2.1 View from Below ... 35
6.2.2 Overview of Terminals on the Multi I/O ... 36
6.3 Electrical connection procedure ... 36
6.4 DC connection ... 37
6.4.1 Overview of DC connectors ... 37
6.4.2 Assembling the PV Connectors (Sunclix) ... 37
6.4.3 Connecting the PV Array ... 38
6.5 Connection of batteries ... 39
6.5.1 Electrical Connection Procedure for a Single Battery ... 39
6.5.2 Assembling the DC Connectors (MC4) ... 40
6.5.3 Connecting the Battery Communication for SMA Home Storage and SMA Storage M ... 41
6.5.4 Connecting the power cable of the battery ... 42
6.5.5 PIN assignment battery communication on Multi I/O ... 43
6.5.6 Connecting the battery communication to Multi I/O ... 43
6.6 Connecting the Inverter to the Utility Grid ... 44
6.7 Connecting the external protective grounding ... 47
6.8 Connecting the Network Cables ... 48
6.9 Mounting the WLAN Antenna ... 49
6.10 Connection for Active Power Limitation ... 50
6.10.1 Procedure for Connecting the Active Power Limitation ... 50
6.10.2 Digital input DI: D1-D4, Vcc ... 50
6.10.3 Pin assignment DI: D1-D4, Vcc ... 50
6.10.4 Circuitry overview DI: D1-D4, Vcc ... 51
6.10.5 Connecting the Digital Input ... 51
6.11 Terminal for digital fast-stop input ... 52
6.11.1 Procedure for Connecting to the Fast-Stop Input ... 52
6.11.2 Pin assignment for fast stop ... 52
6.11.3 Fast stop circuitry overview ... 53
6.11.4 Connecting contact for fast stop ... 53
6.12 Connection to the Multifunction Relay ... 54
6.12.1 Procedure for Connecting the Multifunction Relay ... 54
6.12.2 Digital output (MFR) ... 54
6.12.3 Pin assignment for multifunction relay ... 54

6.12.4 Connecting the Multifunction Relay ... 55
6.13 Connection for Backup Operation ... 56
6.13.1 Connection Procedure for Backup Operation ... 56
6.13.2 Pin Assignment for Signal Cables ... 56
6.13.3 Connecting Signal Cables for Backup Operation ... 56
6.13.4 Connecting the cable for the automatic transfer switching device (SMA Backup) ... 57
6.13.5 Connecting the cable for secure power supply operation ... 58

7 Commissioning ... 61
7.1 Commissioning Procedure of System with the SMA 360° App ... 61
7.2 Switching the Inverter On ... 61
7.3 Configuring the System with the SMA 360° App ... 62
7.4 Commissioning via User Interface ... 63
7.4.1 Procedure for commissioning as System Manager ... 63
7.4.2 Procedure for commissioning as a subordinate device ... 64
7.4.3 Procedure for commissioning in systems with Sunny Home Manager ... 65

8 Operation ... 67
8.1 Use of the user interface powered by ennexOS ... 67

9 Disconnecting the Inverter from Voltage Sources ... 68

10 Maintenance ... 71
10.1 Cleaning ... 71

11 Troubleshooting ... 72
11.1 Event messages ... 72
11.2 Calculating the insulation resistance ... 96
11.3 Checking the PV System for Ground Faults ... 96
11.4 Manual restart after electric arc ... 97
11.5 Create Diagnostics Data ... 98

12 Decommissioning ... 99
12.1 Disconnecting the Terminals from the Inverter ... 99
12.2 Disassembling the PV Connectors ... 100
12.3 Disassembling the Inverter ... 101

13 Replacing the Product ... 102

14 Disposal ... 103

15 Technical Data ... 104
15.1 General Data ... 104
15.2 DC input of PV ... 104
15.3 Battery DC input ... 106
15.4 AC Output ... 107
15.5 Digital inputs ... 108
15.6 Efficiency ... 108
15.7 Digital output, multifunction relay ... 108
15.8 Communication ... 109
15.9 Protective devices ... 109
15.10 Data Storage Capacity ... 109
15.11 Climatic Conditions ... 109
15.12 SPS output (secure power supply operation) during off-grid mode ... 110

15.13 Backup output (battery-backup operation) during off-grid mode (only applies to System Manager)..... 110

16 EU Declaration of Conformity 111

17 Contact 112

1 Information on this Document

1.1 Validity

This document is valid for:

- STPH5-60
- STPH6-60
- STPH8-60
- STPH10-60
- STPH12-60
- STPH15-60

1.2 Target Group

The tasks described in this document must only be performed by qualified persons. Qualified persons must have the following skills:

- Knowledge of how to safely disconnect SMA inverters
- Knowledge of how an inverter works and is operated
- Knowledge of how batteries work and are operated
- Training to deal with risks associated with installing, repairing, and using electrical devices, inverters, and batteries
- Training in the installation and commissioning of electrical devices and installations
- Knowledge of all applicable laws, regulations, standards, and directives
- Knowledge of and compliance with this document and all safety information
- Knowledge of and compliance with the documents of the battery manufacturer with all safety information

1.3 Content and Structure of this Document

This document describes the mounting, installation, commissioning, configuration, operation, troubleshooting and decommissioning of the product.

The latest version of this document and additional information about the product can be found in PDF format and as an eManual at www.SMA-Solar.com. You can also call up the eManual via the user interface of the product.

Illustrations in this document are reduced to the essential information and may deviate from the real product.

1.4 Levels of Warning Messages

The following levels of warning messages may occur when handling the product.

⚠ DANGER
Indicates a hazardous situation which, if not avoided, will result in death or serious injury.

⚠ WARNING
Indicates a hazardous situation which, if not avoided, could result in death or serious injury.

⚠ CAUTION
Indicates a hazardous situation which, if not avoided, could result in minor or moderate injury.

NOTICE
Indicates a situation which, if not avoided, can result in property damage.

1.5 Symbols in the Document

Symbol	Explanation
	Information that is important for a specific topic or goal, but is not safety-relevant
☐	Indicates a requirement for meeting a specific goal
☑	Required result
	Example
⚠ QUALIFIED PERSON	Sections describing activities to be performed by qualified persons only

1.6 Typographies in the document

Typography	Use	Example
bold	• Messages • Terminals • Elements on a user interface • Elements to be selected • Elements to be entered	• Connect the insulated conductors to the terminals **X703:1** to **X703:6**. • Enter **10** in the field **Minutes**.
>	• Connects several elements to be selected	• Go to Settings > Date.
[**Button**] [**Key**]	• Button or key to be selected or pressed	• Select [**Enter**].
#	• Placeholder for variable components (e.g., parameter names)	• Parameter **WCtlHz.Hz#**

1.7 Designations in the Document

Complete designation	Designation in this document
Sunny Tripower Hybrid X	Sunny Tripower, inverter, hybrid inverter, product

1.8 Additional Information

Additional information is available at www.SMA-Solar.com.

Title and information content	Type of information
"Operation of the user interface of products powered by ennexOS"	User Manual
List of approved batteries	Technical Information

Title and information content	Type of information
"Compatibility of SMA Devices" Sunny Boy / Sunny Boy Smart Energy / Sunny Tripower / Sunny Tripower Smart Energy / Sunny Highpower / SMA eCharger / SMA EV Charger"	Technical Information
"Compatibility between common grid configurations and SMA inverters and SMA charging stations"	Technical Information
Efficiency and derating behavior of the SMA inverters	Technical Information
"PUBLIC CYBER SECURITY - Guidelines for a Secure PV System Communication"	Technical Information
"Arc-fault circuit interrupter"	Technical Information
"Parameters and Measured Values" Device-specific overview of all parameters and measured values and their setting options Information about the SMA Modbus registers	Technical Information
"SMA Modbus ®-interface - ennexOS" Information on the SMA Modbus interface	Technical Information
"SunSpec Modbus ®-interface - ennexOS" Information about the SunSpec Modbus interface and supported information models	Technical Information
Answers to frequently asked questions	FAQ on product page

2 Safety

2.1 Intended Use

The Sunny Tripower Hybrid X is a three-phase, transformerless hybrid inverter with 3 PV inputs and a battery connection. The inverter feeds the direct current from the PV modules into the connected battery or converts it to grid-compliant alternating current and then feeds it into the utility grid. The Sunny Tripower Hybrid X also converts the direct current supplied by the battery into grid-compliant alternating current. In a system with additional PV inverters, the Sunny Tripower Hybrid X can convert the alternating current generated by the PV inverters into direct current and charge the battery with it.

The Sunny Tripower Hybrid X can be used as both a hybrid inverter and a PV inverter as well as a battery inverter.

The Sunny Tripower Hybrid X has a manual emergency power supply function (Secure Power Supply). When needed, in the event of a power outage, the Sunny Tripower Hybrid X can continue to supply selected loads with electric current from the battery and the PV system by means of a socket connected to the inverter.

The product is intended for use in residential and industrial environments.

The product must only be used as stationary equipment.

The product is suitable for indoor and outdoor use.

The product must only be operated with PV modules of protection class II in accordance with IEC 61730, application class A. The PV modules must be compatible with this product.

The product is not equipped with an integrated transformer and therefore has no galvanic isolation. The product must not be operated with PV modules or batteries whose outputs are grounded. This can cause the product to be destroyed. The product may be operated with PV modules whose frame is grounded. The product may be operated with batteries whose enclosure is grounded.

PV modules with a high capacity to ground must only be used if the coupling capacity of all PV modules does not exceed 2.25 µF ((see Section 15.2 "DC input of PV", page 104)) (for information on how to determine the coupling capacity, see the Technical Information "Leading Leakage Currents" at www.SMA-Solar.com).

The product must only be operated in connection with an intrinsically safe lithium-ion battery approved by SMA Solar Technology AG. A current list of batteries approved by SMA Solar Technology AG can be found in the Technical Information "Approved Batteries and Information on Battery Communication Connection" under www.SMA-Solar.com.

The battery must comply with the locally applicable standards and directives and must be intrinsically safe (see technical information "Safety Concept for Battery-Storage System" for detailed explanations regarding the safety concept of battery inverters by SMA Solar Technology AG).

The communication interface of the battery used must be compatible with the product. The entire battery voltage range must be completely within the permissible input voltage range of the product. The maximum permissible DC input voltage of the product must not be exceeded.

All components must remain within their permitted operating ranges and their installation requirements at all times.

The product is not suitable for supplying life-sustaining medical devices. A power outage must not lead to personal injury.

The product must only be used in countries for which it is approved or released by SMA Solar Technology AG and the grid operator.

The product may only be operated with one of the energy meters approved by SMA Solar Technology AG. The following energy meters are allowed to be used when operating this product:

- EMETER-20 (SMA Energy Meter)
- EM-3CT63A-21 (SMA Energy Meter CT with 3 CT terminals)
- HM-20 (Sunny Home Manager 2.0)

The products by SMA Solar Technology AG are not suitable for use in

- Medical devices, in particular products for supplying life-support systems and machines,

- Aircraft, the operation of aircraft, the supply of critical airport infrastructure and airport systems,
- Rail vehicles, the operation and supply of rail vehicles and their critical infrastructure.

The above list is not exhaustive. Contact us if you are unsure whether products by SMA Solar Technology AG are suitable for your application.

Use SMA products only in accordance with the information provided in the enclosed documentation and with the locally applicable laws, regulations, standards and directives. Any other application may cause personal injury or property damage.

The documentation must be strictly followed. Deviations from the described actions and the use of materials, tools, and aids other than those specified by SMA Solar Technology AG are expressly forbidden.

Alterations to the SMA products, e.g., changes or modifications, are only permitted with the express written permission of SMA Solar Technology AG. Unauthorized alterations as well as failure to observe the documentation will void guarantee and warranty claims and in most cases terminate the operating license. SMA Solar Technology AG shall not be held liable for any damage caused by such changes.

Any use of the product other than that described in the Intended Use section does not qualify as appropriate.

The documentation supplied is an integral part of SMA products. Keep the documentation in a convenient, dry place for future reference and observe all instructions contained therein.

This document does not replace any regional, state, provincial, federal or national laws, regulations or standards that apply to the installation, electrical safety and use of the product. SMA Solar Technology AG assumes no responsibility for the compliance or non-compliance with such laws or codes in connection with the installation of the product.

The type label must remain permanently attached to the product.

2.2 IMPORTANT SAFETY INSTRUCTIONS

Keep the manual for future reference.

This section contains safety information that must be observed at all times when working.

The product has been designed and tested in accordance with international safety requirements. As with all electrical or electronical devices, some residual risks remain despite careful construction. To prevent personal injury and property damage and to ensure long-term operation of the product, read this section carefully and observe all safety information at all times.

⚠ DANGER

Danger to life due to electric shock when live components or cables of the inverter are touched

High voltages are present in the conductive components or cables of the inverter. Touching live parts and cables of the inverter results in death or lethal injuries due to electric shock.

- Disconnect the product and battery from voltage sources and make sure it cannot be reconnected before working on the device.
- Wear suitable personal protective equipment for all work on the product.
- Do not touch non-insulated parts or cables.

⚠ DANGER

Danger to life due to electric shock when live components or DC cables are touched

The DC cables connected to a battery or a PV module may be live. Touching live DC cables results in death or serious injury due to electric shock.

- Disconnect the product and battery from voltage sources and make sure it cannot be reconnected before working on the device.
- Wait five minutes before working on the inverter.
- Observe all safety information of the battery manufacturer.
- Do not touch non-insulated parts or cables.
- Do not disconnect the DC connectors under load.
- Wear suitable personal protective equipment for all work on the product.

⚠ DANGER

Danger to life due to electric shock from touching an ungrounded PV module or array frame

Touching ungrounded PV modules or array frames results in death or lethal injuries due to electric shock.

- Connect and ground the frame of the PV modules, the array frame and the electrically conductive surfaces so that there is continuous conduction. Observe the applicable local regulations.

⚠ DANGER

Danger to life due to electric shock when touching live system components in case of a ground fault

If a ground fault occurs, parts of the system may still be live. Touching live parts and cables results in death or lethal injuries due to electric shock.

- Disconnect the product and battery from voltage sources and make sure it cannot be reconnected before working on the device.
- Only touch the cables of the PV modules on their insulation.
- Do not touch any parts of the substructure or frame of the PV array.
- Do not connect PV strings with ground faults to the inverter.
- Ensure that no voltage is present and wait 5 minutes before touching any parts of the PV system or the product.

⚠ DANGER

Danger to life due to electric shock in case of overvoltages and if surge protection is missing

Overvoltages (e.g., in the event of a flash of lightning) can be further conducted into the building and to other connected devices in the same network via the network cables or other data cables if there is no surge protection. Touching live parts and cables results in death or lethal injuries due to electric shock.

- Ensure that all devices in the same network and the battery are integrated into the existing surge protection.
- When laying the network cables or other data cables outdoors, it must be ensured that a suitable surge protection device is provided at the transition point of the cable from the product or the battery outdoors to the inside of a building.
- The Ethernet interface of the product is classified as "TNV-1" and offers protection against overvoltages of up to 1.5 kV.

⚠ WARNING

Danger to life due to fire and deflagration

In rare cases, an explosive gas mixture can be generated inside the inverter under fault conditions. In this state, switching operations can cause a fire and, in very rare cases, a deflagration inside the inverter. Death or lethal injuries due to the spread of a fire can result.

- In case of failure, do not perform any direct actions on the inverter.
- In case of failure, ensure that unauthorized persons have no access to the product.
- In case of failure, disconnect the PV module from the inverter via an external disconnection device. If there is no disconnecting device present, wait until no more DC power is applied to the inverter.
- In the event of a fault, disconnect the AC circuit breaker, or keep it disconnected in case it has already tripped, and secure it against reconnection.

⚠ WARNING

Risk of injury due to toxic substances, gases and dusts

In rare cases, damages to electronic components can result in the formation of toxic substances, gases or dusts inside the product. Touching toxic substances and inhaling toxic gases and dusts can cause skin irritation, burns or poisoning, trouble breathing and nausea.

- Only perform work on the product (e.g., troubleshooting, repair work) when wearing personal protective equipment for handling of hazardous substances (e.g., safety gloves, eye and face protection, respiratory protection).
- Ensure that unauthorized persons have no access to the product.

⚠ WARNING

Danger to life due to fire or explosion when batteries are fully discharged

A fire may occur due to incorrect charging of fully discharged batteries. This can result in death or serious injury.

- Before commissioning the system, verify that the battery is not fully discharged.
- Do not commission the system if the battery is fully discharged.
- If the battery is fully discharged, contact the battery manufacturer for further proceedings.
- Only charge fully discharged batteries as instructed by the battery manufacturer.

⚠ WARNING

Danger to life due to burns caused by electric arcs through short-circuit currents

Short-circuit currents in the battery can cause heat build-up and electric arcs. Heat build-up and electric arcs may result in lethal injuries due to burns.

- Disconnect the battery from all voltages sources prior to performing any work on the battery.
- Observe all safety information of the battery manufacturer.

⚠ WARNING

Danger to life due to electric shock from destruction of the measuring device due to overvoltage

Overvoltage can damage a measuring device and result in voltage being present in the enclosure of the measuring device. Touching the live enclosure of the measuring device results in death or lethal injuries due to electric shock.

- Only use measuring devices with a measurement ranges designed for the maximum AC and DC voltage of the inverter.
- Only use measuring devices with measurement ranges designed for the maximum DC voltage of the battery.

⚠ CAUTION

Risk of burns due to hot inverter enclosure parts

Some parts of the inverter enclosure can get hot during operation. Touching hot enclosure parts can result in burn injuries.

- During operation, do not touch any parts other than the enclosure lid of the inverter.
- Wait until the inverter has cooled down before touching the enclosure.

NOTICE

Manipulation of system data in networks

You can connect the supported SMA products to the Internet. When connected to the Internet, there is a risk that unauthorized users can access and manipulate the data of your system.

- Set up a firewall.
- Close unnecessary network ports.
- If absolutely necessary, only enable remote access via a virtual private network (VPN).
- Do not use the port forwarding feature. This also applies to the used Modbus ports.
- Disconnect system components from other network components (network segmentation).

NOTICE

Damage to the product due to cleaning agents

The use of cleaning agents may cause damage to the product and its components.

- Clean the product and all its components only with a cloth moistened with clear water.

NOTICE

Yield reduction due to dirty cooling fins

The power output of the inverter is reduced if the cooling fins are very dirty.

- Clean the cooling fins of the inverter.

i A country data set must be set for feed-in operation

A country data set must be set (e.g. via the product commissioning wizard or a System Manager) in order for the inverter to start feed-in operation during commissioning.

If no country data set is set, then feed-in operation will be stopped. This state is signaled by the green and red LEDs flashing simultaneously.

The inverter will automatically start feed-in operation only after the inverter configuration is completed.

DHCP Server is recommended

The DCHP server automatically assigns the appropriate network settings to your nodes in the local network. A manual network configuration is therefore not necessary. In a local network, the Internet router is usually the DHCP server. If the IP addresses in the local network are to be assigned dynamically, DHCP must be activated in the Internet router (see the Internet router manual). In order to receive the same IP address by the internet router after a restart, set the MAC address binding.

In networks where no DHCP server is active, proper IP addresses must be assigned from the free address pool of the network segment to all network participants to be integrated during commissioning.

Communication disturbances in the local network

The IP address range 192.168.12.0 to 192.168.12.255 is reserved for the SMA-internal data exchange and cannot be used for system communication within the local network.

Communication problems might occur if this IP address range is used in the local network.

- Do not use the IP address range 192.168.12.0 to 192.168.12.255 in the local network.

3 Scope of Delivery

Check the scope of delivery for completeness and any externally visible damage. Contact your distributor if the scope of delivery is incomplete or damaged.

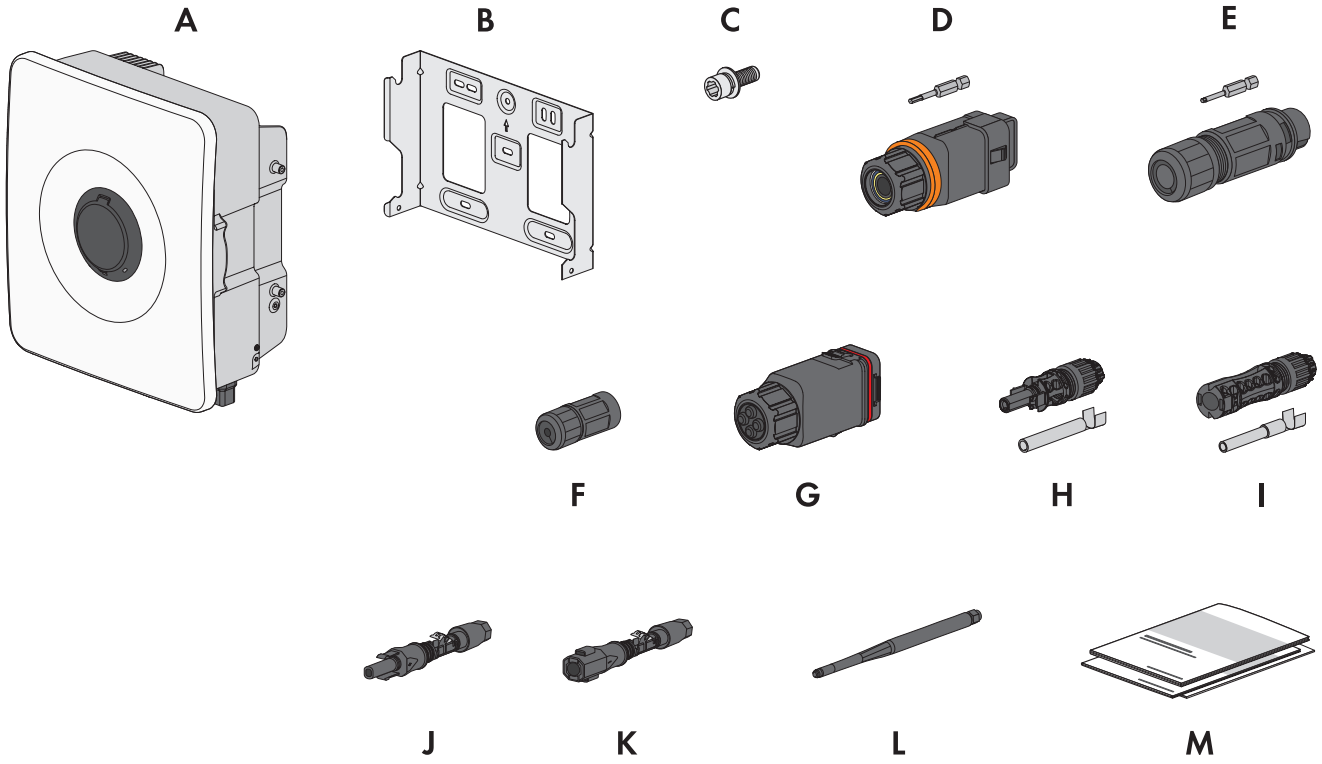

Figure 1: Components included in scope of delivery

Position	Quantity	Designation
A	1	Inverter
B	1	Mounting bracket
C	2	Screw and washer assembly M6x14
D	1	AC connector: union nut, sealing ring, connector enclosure, terminal, fuse terminal block and screwdriver bit
E	1	AC connector for SPS connection and screwdriver bit
F	2	RJ45 protective sleeve: swivel nut, cable support sleeve, threaded sleeve
G	1	Cable gland with assembly for connection to the communication (Multi I/O)
H	1	Positive DC connector and crimp contact (MC4 Evo2) for connection of the battery power cable
I	1	Negative DC connector and crimp contact (MC4 Evo2) for connection of the battery power cable
J	3	Positive DC connector
K	3	Negative DC connector

Position	Quantity	Designation
L	1	Wi-Fi antenna
M	1	Documentation package consists of: • Safety information booklet • Quick reference guide poster with illustrated instructions for initial installation and commissioning • Supplementary sheet with password label contains the following information: – PIC (Product Identification Code) identification key for registering the system in Sunny Portal – RID (Registration Identifier) registration ID for registering the system in Sunny Portal – Wi-Fi password WPA2-PSK (WiFi Protected Access 2 - Preshared Key) for direct connection to the product via Wi-Fi – Device Key (DEV KEY) for resetting the administrator password

4 Product overview

4.1 Device function

It is possible to use and configure the inverter either as a system manager or as a subordinate device.

When using an inverter as a System Manager, ensure that a maximum of up to 10 additional devices (including a maximum of 5 inverters) can be integrated into the system.

You can set the device function using the commissioning wizard.

Inverter as System Manager

If you configure the inverter as System Manager, the inverter as a main device in conjunction with an energy meter takes over the control at the point of interconnection and can receive control signals. The inverter can control other subordinate devices, takes over the monitoring of the system and the communication to the Sunny Portal powered by ennexOS.

Subordinate device

If you configure the inverter as a subordinate device, it does not take over independent closed-loop control and open-loop control. The subordinate inverter receives specifications from the System Manager (e.g. an SMA Data Manager) and implements them.

4.2 Product Description

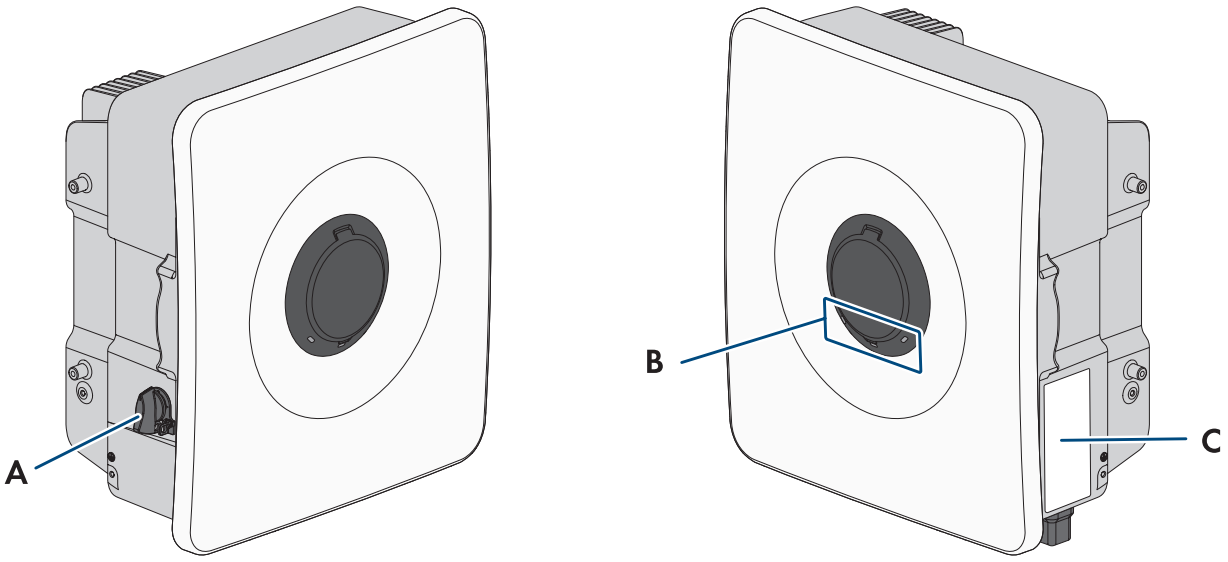

Figure 2: Design of the product

Position	Designation
A	Load-break switch for PV (DC)

Position	Designation
B	LEDs The LEDs indicate the operating state of the product.
C	Type label The type label clearly identifies the product. The type label must remain permanently attached to the product. You will find the following information on the type label: • Device type (Model) • Serial number (Serial No. or S/N) • Date of manufacture • Device specific characteristics • QR code for scanning in the SMA 360° App for easy commissioning and connection to the user interface via Wi-Fi

4.3 Symbols on the Product

Symbol	Explanation
	Beware of a danger zone This warning symbol indicates a danger zone.
	Beware of electrical voltage The product operates at high voltages.
	Beware of hot surface The product can get hot during operation.
	Observe the documentation Observe all documentations supplied with the product.
	Danger to life due to high voltages in the inverter; observe a waiting time of 5 minutes. High voltages that can cause lethal electric shocks are present in the live components of the inverter. Before carrying out any work on the inverter, always de-energize the inverter as described in this document and secure it against reconnection.
	Operation LED Indicates whether the product is in operation.
	Error Together with the red LED, this symbol indicates an error. Observe the documentation.
	Data transmission Together with the blue LED, this symbol indicates the status of the network connection.
	Grounding conductor This symbol indicates the position for connecting a grounding conductor.

Symbol	Explanation
	The product has no galvanic isolation.
	WEEE designation Do not dispose of the product together with the household waste but in accordance with the disposal regulations for electronic waste applicable at the installation site.
CE	CE marking The product complies with the requirements of the applicable EU directives.
RoHS	RoHS labeling The product complies with the requirements of the applicable EU directives.

4.4 Sunny Tripower Hybrid X as System Manager

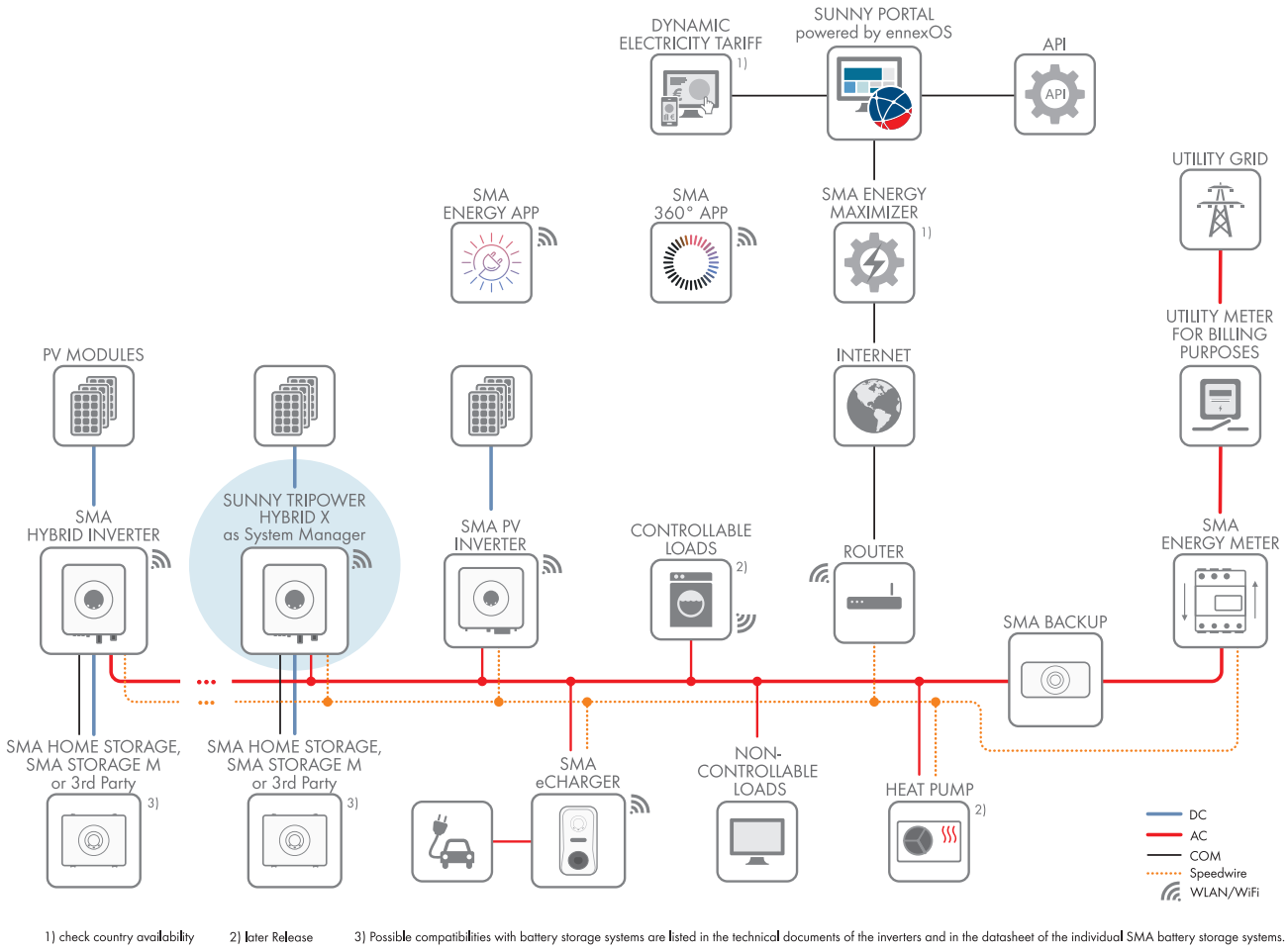

Figure 3: System Overview

4.5 Interfaces and Functions

4.5.1 User Interface

The product is equipped as standard with an integrated webserver, which provides a user interface for configuring and monitoring the product.

Once the connection has been established to the smart device, use a device (e.g. smartphone, tablet or laptop) to connect to the product's user interface using a web browser.

4.5.2 Device Key (DEV KEY)

If you have forgotten the administrator password for the product, you can reset the administrator account with the device key and assign a new password. The device key can be used to prove the identity of the product in digital communication. The Device Key is provided on a sheet with a password label supplied with the product. Keep the device key safe in case you forget the administrator password.

4.5.3 Diagnostic function

The inverter has a diagnostic function for measuring the current/voltage characteristic curve (I-V characteristic curve) of the PV modules connected to DC inputs. The characteristic curve shows deviations and changes from the ideal curve. By this, problems in the PV modules can be detected at an early stage.

4.5.4 Digital inputs

The inverter is equipped with digital inputs as standard.

Digital input **DI 1-4** is provided for connecting a ripple control receiver or remote terminal unit for regulation by the grid operator (e.g. to fulfill Energy Industry Act §14a requirements).

4.5.5 Increased self-consumption

With increased self-consumption, the highest possible proportion of the energy of a generator (e.g., a PV system) is consumed and stored at the place where it is generated. With increased self-consumption, power output at the point of interconnection is reduced when the energy can be consumed or stored at the place where it is generated. The power draw at the point of interconnection is reduced since a large proportion of the self-generated energy is being used.

The solution supports the increased self-consumption through intermediate storage of energy from generators. In addition to the inverter, an energy meter and a battery are required for operation.

4.5.6 Energy Monitoring

The inverter supports the display of balances for PV generation and battery charging and discharging in the Sunny Portal powered by ennexOS or in the SMA Energy App. When the inverter is used together with the SMA Energy Meter, further and more detailed balances are displayed.

4.5.7 SMA Premium

Availability of SMA products in your country

Not all SMA products are available in all countries. For information on whether an SMA product is available in your country, check the information on the product page at https://www.SMA-Solar.com.

SMA Premium is an expanded function package that enables the use of the Energy Maximizer and thus supports optimal operation of PV systems. SMA Premium gives users access to intelligent energy management functions that help to increase self-consumption, utilize dynamic electricity costs, automatically control loads (electricity storage system, SMA eCharger, SMA EV Charger Business), and improve the economic efficiency of the system.

Activation of SMA Premium is done using Sunny Portal powered by ennexOS or the SMA Energy App. After activation, the package can be managed with the SMA ID.

Also see:

- Energy Maximizer ⇒ page 22
- Energy Planner ⇒ page 22

4.5.8 Energy Maximizer

The Energy Maximizer is an automated energy management system that provides intelligent optimizations to control energy flows across the entire system. The system uses forecast data and internal analytical algorithms to dynamically coordinate loads and storage and use energy efficiently. Code functions include:

- Automatic optimization of energy flows based on PV generation forecasts and tariff forecasts
- Consumption patterns and system sensors
- Proactive load shifting to increase self-consumption and avoid peak loads to reduce curtailment losses. Priority should be given to the use of electric current that is not remunerated, and, in the event of a negative feed-in tariff, grid feed-in should be prevented.

The Energy Maximizer operates completely autonomously and does not require no manual intervention. It minimizes the configuration effort and improves the energy efficiency of the entire system at the same time.

The product can be activated via SMA Premium to expand the basic functions of products powered by ennexOS. The configuration can then be carried out via Sunny Portal powered by ennexOS.

Also see:

- SMA Premium ⇒ page 21

4.5.9 Energy Planner

The Energy Planner provides the basic functions that are always available for SMA energy management. The application allows you to configure the energy management manually and customize it to your needs.

The core functions include:

- Manual planning and control of energy flows within the system, with a focus on integrated batteries
- Configuration of peak load profiles and consumption profiles according to individual preferences or processes
- Fundamental visualization and analysis of the energy distribution in Sunny Portal powered by ennexOS
- Independent adjustment of operating parameters without automated intervention

The Energy Planner therefore serves as a flexible platform that enables basic energy management measures without relying on automated optimization mechanisms.

Also see:

- SMA Premium ⇒ page 21

4.5.10 Peak load shaving

With the "Peak Load Shaving" function, you can optimize the behavior of the inverter with respect to the power exchange at the point of interconnection. This is mostly useful when a higher supply of energy would lead to a higher electricity cost or high costs per kW peak. With peak load shaving, the inverter controls - depending on its output and, in systems with a battery, on the available battery capacity - to previously defined grid exchange capacities. Power peaks and additional costs can thus be avoided.

You can configure maximum values for the power drawn at the point of interconnection. When the loads require additional energy, the battery is discharged and the maximum value is kept constant at the grid-connection point. This is based on the prerequisite that the battery is sufficiently charged.

In addition to the inverter, an energy meter and a battery are required for operation.

4.5.11 Modbus

The inverter is equipped with a Modbus interface. The Modbus interface is deactivated by default and must be configured as needed.

The Modbus interface of the supported SMA products is designed for industrial use – via SCADA systems, for example – and has the following tasks:

- Remote query of measured values

- Remote setting of operating parameters
- Setpoint specifications for system control

4.5.12 Multifunction relay (MFR)

The inverter is equipped with 2 multifunction relays as standard. A multifunction relay is an interface that can be configured for the operating mode used by a particular system.

Multifunction relays can only be used if the inverter is configured as System Manager.

4.5.13 Grid Management Services

The product is equipped with service functions for grid management.

Depending on the requirements of the grid operator, you can activate and configure the functions (e.g. active power limitation) via operating parameters.

4.5.14 Battery-backup function

Requirements:

☐ 1 Sunny Tripower Hybrid X as System Manager

☐ 1 SMA Energy Meter / SMA Energy Meter CT or 1 Sunny Home Manager 2.0 (configured as energy meter)

☐ Maximum of 3 Sunny Tripower Hybrid X operating in parallel in backup operation

☐ Other SMA inverters, balcony power stations or third-party inverters are **not permitted**.

The inverter is equipped with a battery-backup function. The battery-backup function is disabled by default and can be enabled and configured via the user interface of the product or via the SMA 360° app (during initial commissioning).

The battery-backup function ensures that the inverter forms a three-phase battery-backup grid that uses energy from the battery and the PV system that is directly connected to the inverter to supply the final circuits of the household grid in the event of a utility grid failure.

As soon as the utility grid is available again, the battery-backup operation is disabled automatically and the loads are supplied with energy from the household grid. When the utility grid is down and the battery fully discharged, there is, in the beginning, not enough power available to create a stable battery-backup grid. In this case, the battery must be charged by the PV system. The inverter is able to create a stable battery-backup grid only when enough power is available in the battery.

Battery-backup operation starts automatically as soon as enough energy is available from the PV system. By setting parameters, it is possible to define up to which state of charge the battery is charged and discharged. For example, it is possible to set the amount of energy that should remain in the battery for battery-backup operation.

i Do not connect any loads that require an uninterrupted energy supply

The secure power supply operation and the battery-backup operation may not be used for loads that require a uninterrupted energy supply. The energy that is available during the secure power supply operation or battery-backup operation depends on the current PV power, battery capacity available and the state of charge of the battery (SoC).

- Do not connect loads if they are dependent on an uninterrupted energy supply for reliable operation.

4.5.15 Secure Power Supply Operation

In case of a grid failure, the secure power supply operation supplies the loads with energy from the battery and the PV system. You can connect a standard socket (230 V) and a standard switch to the inverter. You can connect a load with a maximum of 16 A and 230 V to the secure power supply socket. The load is supplied with energy from the battery and PV system during grid failure. The switch is used to enable and disable secure power supply operation.

The secure power supply operation is not automatically enabled in the event of a grid failure, neither is it automatically disabled once the utility grid is available again. If the utility grid fails, the load must be connected to the socket for secure power supply operation. The supply to the load must be activated manually by switching on the switch to secure power supply operation. The inverter automatically regulates the energy supply of the socket after activating the secure power supply operation. When the utility grid is available again and the loads can be supplied from it, the loads must be connected to the previous supply and the secure power supply operation must be deactivated manually by switching off the switch.

During active secure power supply operation, the inverter is disconnected from the building's main electrical system and does not therefore feed into the utility grid. The loads can only be supplied in secure power supply operation as long as energy can still be provided by the PV modules and/or the battery. If there is insufficient energy available, the secure power supply operation remains active, even if the utility grid is available again. Switching over to supplying the loads from the utility grid is not carried out automatically.

Do not connect any loads that require an uninterrupted energy supply

The secure power supply operation and the battery-backup operation may not be used for loads that require a uninterrupted energy supply. The energy that is available during the secure power supply operation or battery-backup operation depends on the current PV power, battery capacity available and the state of charge of the battery (SoC).

- Do not connect loads if they are dependent on an uninterrupted energy supply for reliable operation.

4.5.16 Fast stop function

The fast stop function is a digital input on the inverter via which the inverter can be disconnected from the utility grid. It can be triggered by means of an external potential-free contact (break contact).

The digital input can, for example, be used to implement the grid and PV system protection as required by VDE-AR-N-4105. The inverter is suitable for grid disconnection due to its redundant and integrated interface switch. Here, the disconnection units integrated in the inverter can replace an external interface switch. An external, certified monitoring unit with an integrated potential-free PV system protection relay and an alarm contact configured as a break contact must be connected to the inverter's fast-stop input.

The fast stop function is deactivated by default and must be activated in the inverter.

4.5.17 Protective Battery Charging

If the battery is not charged for a long time, there is a risk of deep discharge. To prevent damage to the battery due to deep discharge, the inverter charges the battery from the utility grid for approx. 10 to 15 minutes when the SOC (State of Charge) is very low.

4.5.18 SMA ArcFix

SMA ArcFix is an Arc Fault Circuit Interrupter (AFCI). With this function, the inverter effectively detects arcs on the DC side and interrupts them.

A detected electric arc causes the inverter to interrupt feed-in operation. To restart feed-in operation, the operational disruption which has occurred, must be reset through a manual restart. Depending on the country data set, arc fault detection is activated or deactivated. If the installation conditions permit this, you can change the default setting.

Also see:

- Manual restart after electric arc ⇒ page 97

4.5.19 SMA PUK 2.0

The PUK (Personal Unlocking Key) is a security code. It is used to reset lost or forgotten passwords for digital devices. The PUK security feature protects against unauthorized access.

4.5.20 SMA Dynamic Power Control

SMA Dynamic Power Control is a pre-installed software that allows a System Manager to control the active and reactive power of up to 5 inverters (including the System Manager).

4.5.21 SMA ShadeFix

The inverter is equipped with the shade management system SMA ShadeFix. SMA ShadeFix uses an intelligent MPP tracking system to determine the operating point with the highest output during shading conditions. With SMA ShadeFix, inverters use the best possible energy supply from the PV modules at all times to increase yields in shaded systems.

SMA ShadeFix is enabled by default.

The time interval of SMA ShadeFix is usually 6 minutes. This means that the inverter determines the optimum operating point every 6 minutes. Depending on the PV system or shading situation, it may be useful to adjust the time interval.

4.5.22 SMA Smart Connected

SMA Smart Connected is the free monitoring of the inverter via the SMA Sunny Portal. Thanks to SMA Smart Connected, the operator and qualified person will be informed automatically and proactively about inverter events that occur.

SMA Smart Connected is activated during registration in Sunny Portal. In order to use SMA Smart Connected, it is necessary that the inverter is permanently connected to Sunny Portal and the data of the operator and qualified person is stored in Sunny Portal and up-to-date.

4.5.23 SMA Speedwire

The inverter is equipped with SMA Speedwire as standard. SMA Speedwire is a type of communication based on the Ethernet standard. SMA Speedwire is designed for a data transfer rate of 100 Mbps and enables optimum communication between Speedwire devices within systems.

The inverter supports the encrypted system communication with SMA Speedwire Encrypted Communication. In order to be able to use the Speedwire encryption in the system, all Speedwire devices, except for the energy meter (e.g. SMA Energy Meter) must support the function SMA Speedwire Encrypted Communication.

4.5.24 Wi-Fi connection to SMA 360° app and SMA Energy app

There is a QR code on the product type label by default. Scanning the QR Code on the product using the SMA 360° app enables Wi-Fi access and automatically connects to the user interface.

Commissioning of the system can be started and carried out by scanning the QR code with the SMA 360° app. Subsequently, the SMA Energy App can be used for energy monitoring of the system.

4.5.25 Wi-Fi

The inverter is equipped with a WLAN interface as standard. SMA Solar Technology AG recommends using Wi-Fi only for commissioning. The inverter is delivered with the WLAN interface activated as standard. If you do not want to use WLAN, you can deactivate the WLAN interface.

If Wi-Fi is to be used for the inverter or system operation, use the external antenna. SMA Solar Technology AG recommends using a wired connection (Ethernet) to the system network to ensure a stable connection and reliable control. When using a wired connection (Ethernet), the Wi-Fi interface must be disabled.

In addition, the inverter has a WPS function. The WPS function connects the inverter automatically to the network (e.g., via router).

4.6 LED Signals

The LEDs indicate the operating state of the product. Event messages are displayed in Sunny Portal, on the user interface of the product, or in the SMA Energy App.

LED signal	Explanation
Green LED and red LED flash simultaneously (2 s on and 2 s off)	No country data set set Operation of the product is stopped because no country data set is set. The product automatically starts operation as soon as the configuration has been carried out (e.g., using the commissioning wizard or via a System Manager).
The green LED is flashing (2 s on and 2 s off)	Waiting for feed-in conditions The conditions for feed-in operation are not yet met. As soon as the conditions are met, the product will start feed-in operation.
The green LED is glowing	Operation The product is in operation.
The green LED is off	No DC voltage is present.
The red LED is glowing	Error Operation of the product has been stopped. (see Section 11.1 "Event messages", page 72).
Red LED is flashing (0.25 s on, 0.25 s off, 0.25 s on, 1.25 s off)	Warning Communication with the System Manager failed. The inverter continues to operate with restricted function (e.g., with set fallback level). (see Section 11.1 "Event messages", page 72).
The blue LED is flashing slowly (2 s on and 2 s off)	Communication connection is being established. The product is establishing a connection with a local network or is establishing a direct connection to a smart device (e.g., smartphone, tablet or laptop).
The blue LED is flashing fast (0.25 s on and 0.25 s off)	A System Manager is requesting identification of the product.
The blue LED is glowing	There is an active connection with a local network or there is a direct connection with a smart device (e.g., smartphone, tablet or laptop).
Blue LED is off	There is no active connection.
All 3 LEDs are on	Product update or booting procedure.

5 Mounting

5.1 Requirements for Mounting

5.1.1 Requirements for the Mounting Location

⚠ WARNING

Danger to life due to fire or explosion

Despite careful construction, electrical devices can cause fires. This can result in death or serious injury.

- Do not mount the product in areas containing highly flammable materials or gases.
- Do not mount the product in potentially explosive atmospheres.

- ☐ The mounting location must be suitable for the weight and dimensions of the product.
- ☐ A solid support surface must be available (e.g., concrete or masonry, free-standing constructions). When mounted on drywall or similar materials, the inverter emits audible vibrations during operation which could be perceived as annoying.
- ☐ Drywall must have a minimum thickness of 25 mm. This means that double-layer drywall must be used or the drywall must be additionally reinforced (e.g., with plywood, OSB, or chipboard).
- ☐ The installation site can be exposed to direct solar irradiation. There is, however, the possibility that the product reduces its power output to avoid overheating due to high temperatures.
- ☐ The installation site should be freely and safely accessible at all times without the need for any auxiliary equipment (such as scaffolding or lifting platforms). Non-fulfillment of these criteria may restrict servicing.
- ☐ The DC load-break switch of the product must always be freely accessible.
- ☐ All ambient conditions must be met.
- ☐ The ambient temperature should be -25 °C to +45 °C to ensure optimal operation.

5.1.2 Permitted and prohibited mounting positions

- ☐ The product may only be mounted in a permitted position. This will ensure that no moisture can penetrate the product.
- ☐ The product should be mounted such that the LED signals can be read off without difficulty.

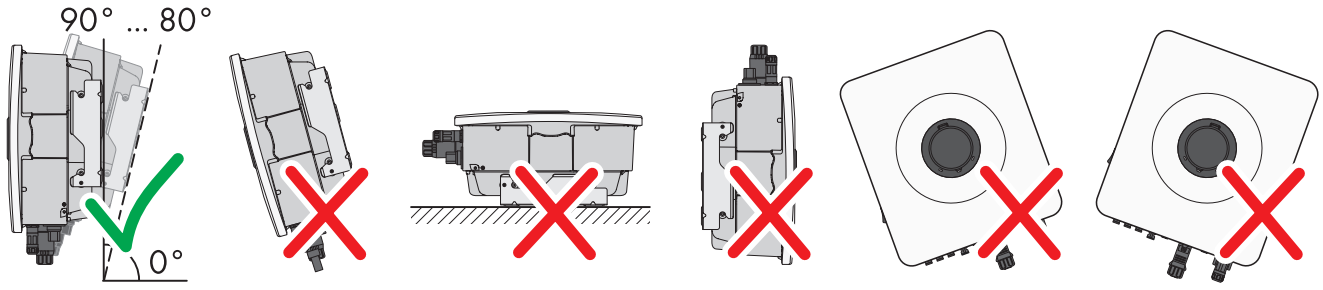

Figure 4: Permitted and prohibited mounting positions

5.1.3 Dimensions for Mounting

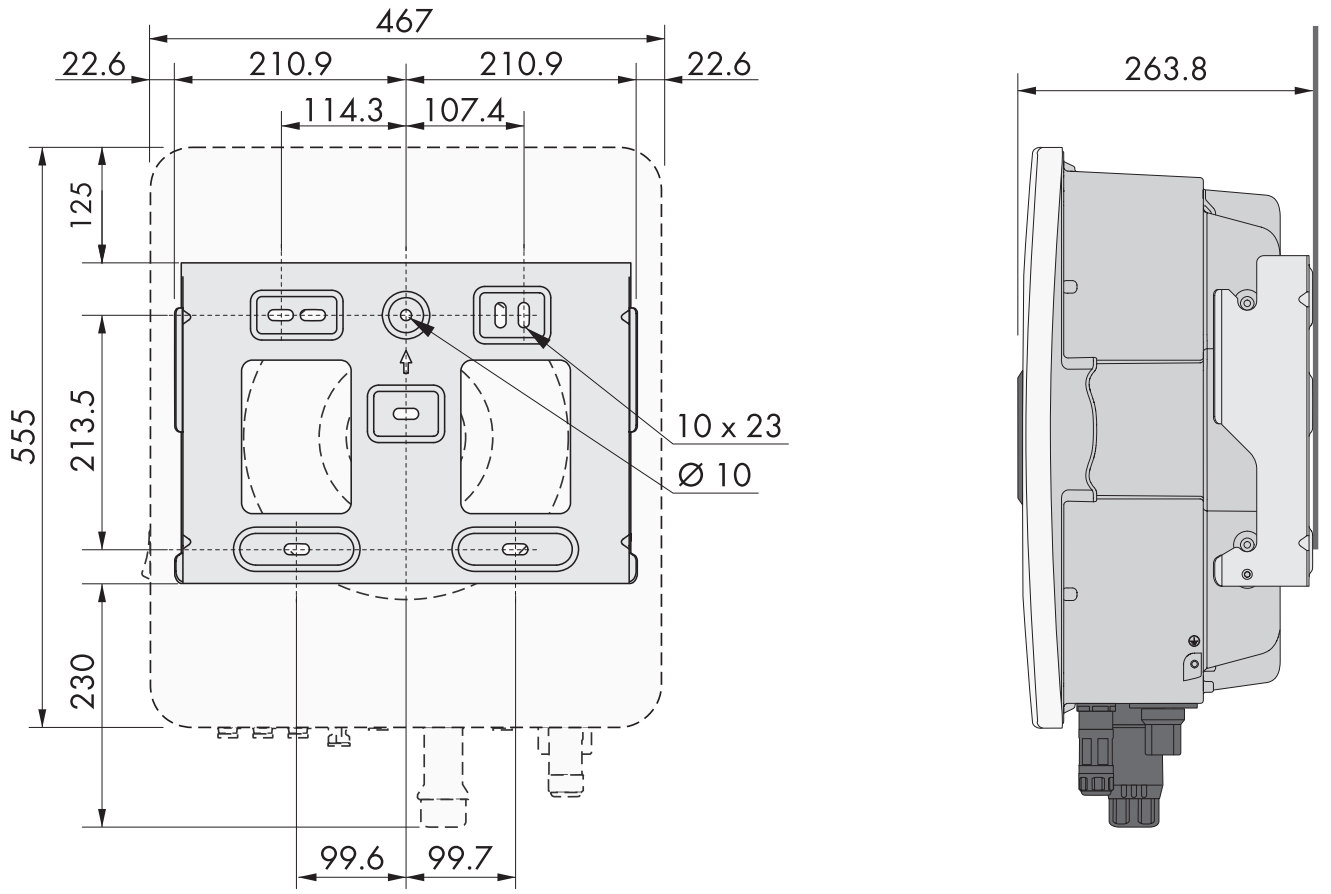

Figure 5: Position of the anchoring points (dimensions in mm)

5.1.4 Recommended clearances for mounting

☐ Recommended distances to walls, other devices and objects should be maintained.

☐ If multiple products are mounted in areas with high ambient temperatures, increase the clearances between the products and ensure sufficient fresh-air supply.

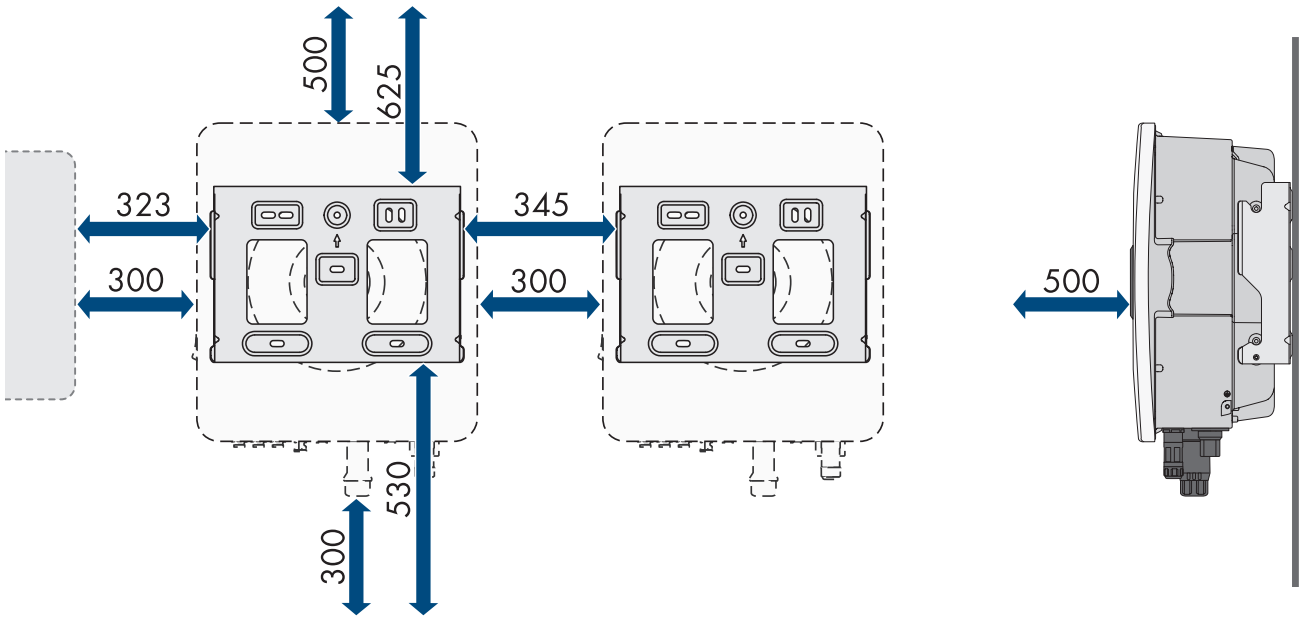

Figure 6: Recommended clearances (dimensions in mm)

5.2 Mounting the Inverter

⚠ QUALIFIED PERSON

Additionally required material (not included in the scope of delivery):

- At least 3 or 4 screws (depending on support surface) suitable for both the support surface and the weight of the inverter
- 3 or 4 washers suitable for the screws
- 3 or 4 screw anchors (depending on support surface) suitable for the support surface and the screws

⚠ CAUTION

Risk of injury due to weight of product

Injuries may result if the product is lifted incorrectly or dropped while being transported or mounted.

- Transport and lift the product carefully. Take the weight of the product into account.
- Wear suitable personal protective equipment for all work on the product.

Procedure:

1. Align the mounting bracket horizontally and mark the position of the drill holes. Use at least 1 hole on the left and one on the right. At least 4 holes have to be utilized when mounting to drywall.
2. Set the mounting bracket aside and drill the marked holes.
3. Insert screw anchors into the drill holes if the support surface requires them.

4. Tighten the mounting bracket horizontally with screws and washers. Ensure the mounting bracket is correctly aligned.

   ☑ The mounting bracket is installed correctly.

5. Do not place the inverter vertically under any circumstances as this could damage the device connectors.

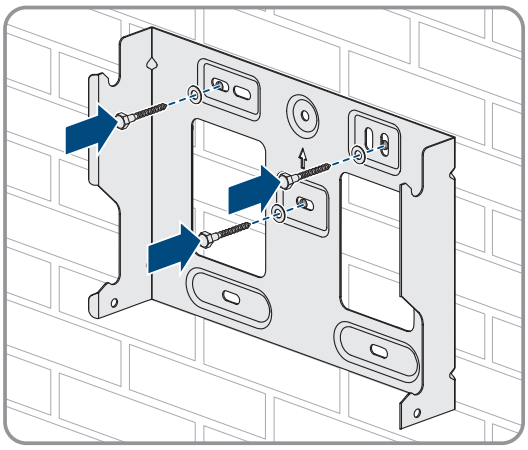

6. Pick up the inverter by the recessed grips on the sides and, holding it slightly tilted, insert it over the upper 2 rivets into the upper recesses of the mounting bracket.

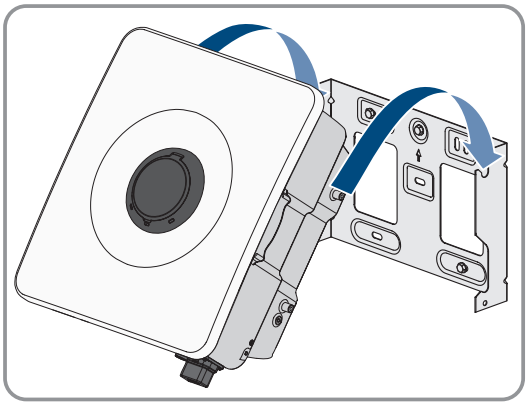

7. Carefully rotate the bottom of the inverter toward the support surface and place it at a 90° angle to the base. Make sure that the bottom and top rivets are securely seated in the corresponding recesses.

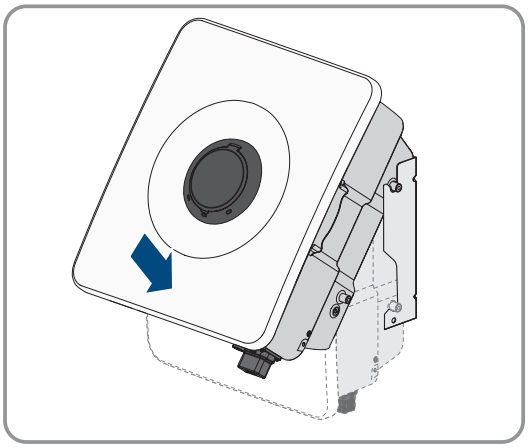

8. Attach the inverter to the mounting bracket using the supplied screw and washer assemblies (M6x14).
9. Make sure that the inverter is securely attached by carefully moving the enclosure back and forth.

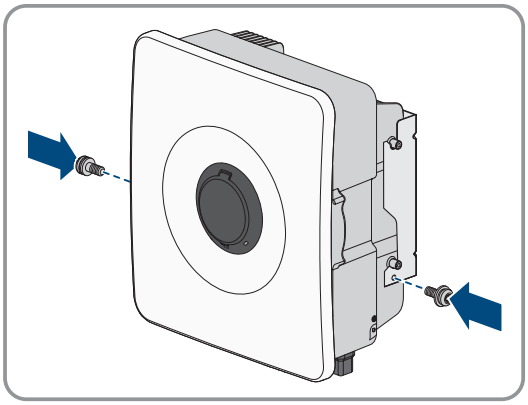

6 Electrical Connection

6.1 Requirements for the electrical connection

6.1.1 Permitted grid configurations

The inverter approved for operation in the following utility grids:

- TN-S
- TN-C-S
- TT [1)]

TN-S system

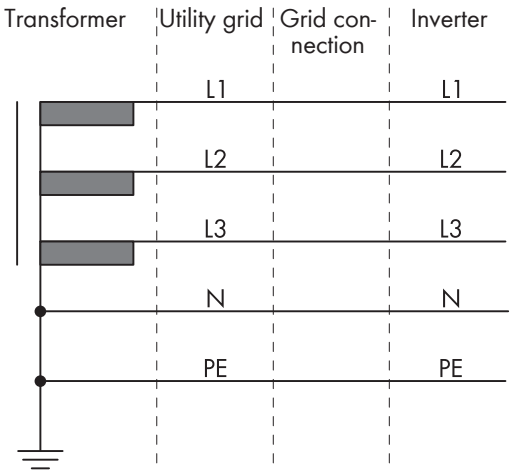

TN-C-S grid configuration

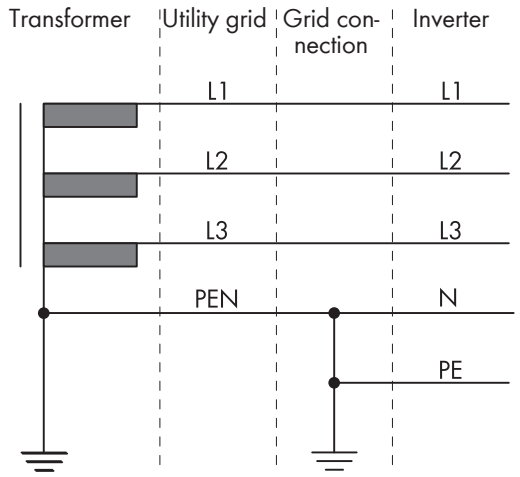

TT system

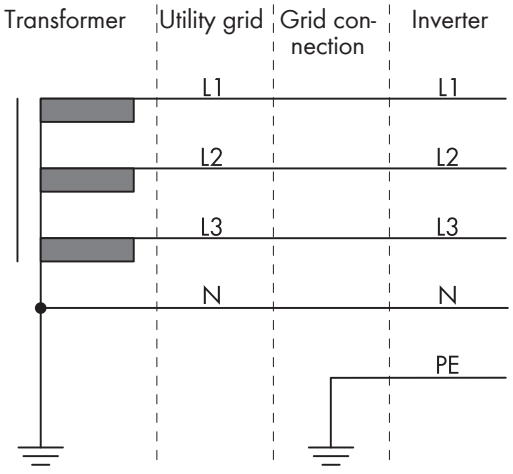

6.1.2 Equipotential Bonding

If components are used in the PV system that require equipotential bonding (e.g., mounting racks, module frames), these must be connected to a central equipotential panel provided for this purpose.

[1)] It must be ensured that the local grounding has a sufficiently low-impedance connection to the grounding of the transformer, otherwise operational leakage currents can lead to potential differences. For error-free operation, the ground potential at the neutral point of the transformer must be the same as that of the grounding conductor connection on the inverter. Improper implementation of the transformer/ grid connection with regard to low-impedance grounding of the neutral point can lead to a device defect that is not covered by the warranty.

Observe the installation guidelines and regulations applicable in your country. The enclosure of the inverter is not suitable as equipotential bonding. Incorrect implementation of equipotential bonding can lead to an inverter defect that is not covered under warranty.

6.1.3 Residual-current monitoring unit (RCMU)

The inverter is equipped with an all-pole sensitive residual-current monitoring unit in accordance with IEC/EN 62109-2 and VDE 0126-1-1. The all-pole sensitive residual-current monitoring unit monitors AC and DC residual currents. It disconnects the inverter redundantly from the utility grid in the event of residual current jumps of > 30 mA. If the residual current monitoring unit malfunctions, the inverter is immediately disconnected from the utility grid at all poles. If the protection by automatic disconnection of supply according to DIN VDE 0100-410 is fulfilled by an appropriate overcurrent protective device, the inverter does not require an external residual-current device for safe operation. If local regulations require a residual-current device, the following must be observed in addition to the information in the local regulations:

- The inverter is compatible with type A and B residual-current devices. The rated residual current of the residual-current device must be 100 mA or higher (for information on selecting a residual-current device, see Technical Information "Criteria for Selecting a Residual-Current Device" under www.SMA-Solar.com). Each inverter in the system must be connected to the utility grid via a separate residual-current device.
- When using residual-current device with a lower rated residual current, there is a risk of false tripping of the residual-current device, depending on the system design.

6.1.4 Overvoltage category

The product can be used in grids of overvoltage category III or lower in accordance with IEC 60664-1. That means that the product can be permanently connected to the grid-connection point of a building.

6.1.5 Requirements for the PV modules per input

- All PV modules should be of the same type.
- All PV modules should be aligned and tilted identically. Otherwise the yields may be reduced.
- On the coldest day based on statistical records, the open-circuit voltage of the PV array must never exceed the maximum input voltage of the inverter.
- The maximum input current per input must be observed and must not exceed the through-fault current of the DC connectors in the installation.
- The thresholds for the input voltage and the input current of the inverter must be adhered to.

6.1.6 Load-break switch and cable protection

NOTICE

Damage to the inverter due to the use of screw-type fuses as load-break switches

Screw-type fuses (e.g. DIAZED fuse or NEOZED fuse) are not load-break switches.

- Do not use screw-type fuses as load-break switches.
- Use a load-break switch or circuit breaker as a load disconnection unit (for information and design examples, see the Technical Information "Miniature circuit breaker" at www.SMA-Solar.com).

☐ In PV systems with multiple inverters, protect each inverter with a separate three-phase circuit breaker. Make sure to observe the maximum permissible fuse protection (see Section 15 "Technical Data", page 104). This will prevent residual voltage from being present at the corresponding cable after disconnection.

☐ Loads installed between the inverter and the circuit breaker must be fused separately.

6.1.7 Cable Requirements

6.1.7.1 AC cable requirements

- ☐ Conductor type: copper wire (flexible)
- ☐ External diameter: 11 mm to 24 mm
- ☐ Conductor cross-section: from 2.5 mm^2 to 10 mm^2
- ☐ Insulation stripping length: 16 mm
- ☐ Sheath stripping length: 60 mm
- ☐ The cable and conductor cross-sections must always be dimensioned according to the local and national directives and within the range specified by the manufacturer (SMA Solar Technology AG)." If the manufacturer (SMA Solar Technology AG) requires a higher conductor cross-section than the standard, the range of the manufacturer must be observed. Examples of factors influencing cable dimensioning are: nominal AC current, type of cable, routing method, cable bundling, ambient temperature and maximum desired line losses (for calculation of line losses, see the design software "Sunny Design" from software version 2.0 at www.SMA-Solar.com).

6.1.7.2 Requirements for the PV cables

- ☐ Outer diameter: 5.5 mm to 8 mm
- ☐ Conductor cross-section: 2.5 mm^2 to 6 mm^2
- ☐ Qty single wires: minimum 7
- ☐ Nominal voltage: minimum 1000 V
- ☐ Using bootlace ferrules is not allowed.

6.1.7.3 Requirements for signal cables for backup operation, multifunction relay (MFR), and fast stop

The cable length and quality affect the quality of the signal. Observe the following cable requirements:

- ☐ Conductor type: copper wire
- ☐ The conductors must be solid or stranded wire.
- ☐ Conductor cross-section: from 0.2 mm^2 to 0.34 mm^2
- ☐ External outer diameter: max. 9 mm
- ☐ Insulation stripping length: 8 mm to 10 mm
- ☐ Nominal voltage: at least 600 V
- ☐ Maximum cable length: 200 m
- ☐ UV-resistant for outdoor use
- ☐ The cable type and cable-laying method must be appropriate for the application and location.

6.1.7.4 Requirements on the SPS OUT AC cable for connection to the inverter

- ☐ Conductor type: copper wire
- ☐ The conductors must be solid or stranded wire.
- ☐ Conductor cross-section when using solid or stranded wire without bootlace ferrules: 1.5 mm^2 to 2.5 mm^2
- ☐ Conductor cross-section when using bootlace ferrules: 1.5 mm^2 to 2.5 mm^2
- ☐ External diameter: 8 mm to 9.5 mm
- ☐ Insulation stripping length: 8 mm to 10 mm
- ☐ Maximum length of conductors: 30 m

6.1.7.5 Network cable requirements

The cable length and quality affect the quality of the signal. Observe the following cable requirements:

- ☐ Cable type: 100BaseTx
- ☐ Cable category: minimum CAT5e
- ☐ Plug type: RJ45 of Cat5e or higher
- ☐ Shielding: SF/UTP, S/UTP, SF/FTP or S/FTP
- ☐ Number of insulated conductor pairs and insulated conductor cross-section: at least 2 x 2 x 0.22 mm^2
- ☐ Maximum cable length between two nodes when using patch cables: 50 m
- ☐ Maximum cable length between two nodes when using installation cables: 100 m
- ☐ UV-resistant if installed outdoors.

6.1.7.6 Battery Communication Cable Requirements

The cable length and quality affect the quality of the signal. Observe the following cable requirements:

- ☐ Cable type: 100BaseTx
- ☐ Cable category: minimum CAT5e
- ☐ Plug type: RJ45 of Cat5e or higher
- ☐ Shielding: SF/UTP, S/UTP, SF/FTP or S/FTP
- ☐ Number of insulated conductor pairs and insulated conductor cross-section: at least 2 x 2 x 0.34 mm^2
- ☐ Maximum cable length between inverter and battery when using patch and installation cables: 10 m[2)]
- ☐ UV-resistant for outdoor installation.

6.1.7.7 Requirements for the Battery Power Cables

Observe the following cable requirements:

- ☐ Conductor type: copper wire
- ☐ Conductor cross-section: 10 mm^2
- ☐ Insulation stripping length: 6.5 mm
- ☐ Outer diameter: 6.4 mm to 8.4 mm
- ☐ Use the crimp contacts included in the scope of delivery and observe the manufacturer's specifications.
- ☐ Maximum permissible cable length between the inverter and the battery: 10 m[3)]
- ☐ The cables must be rated for a minimum voltage of 800 V.

i Observe manufacturer's specifications for battery power cables

When crimping battery power cables, the appropriate tool, correct cable cross-section, proper insulation stripping length, and a firm but non-damaging crimp are essential for a safe and conductive connection. Make sure not to damage the stranded wires and to insert and tighten all components correctly, especially the strain relief, to ensure a durable, moisture-proof, and abrasion-resistant connection.

[2)] Approval for cable lengths > 10 m is currently under review.

[3)] Approval for cable lengths > 10 m is currently under review.

6.1.7.8 Requirements for the grounding cable for additional protective grounding

- ☐ The conductor must be solid or stranded or finely stranded wire. If finely stranded wire is used, the conductor must be double-crimped with a ring terminal lug. Ensure that no insulated conductor is visible when pulling or bending. This will ensure sufficient strain relief by means of the ring terminal lug.
- ☐ Cable cross-section: at least 2.5 mm to 10 mm²
- ☐ The cable must be dimensioned in accordance with the local and national directives for the dimensioning of cables. The requirements for the minimum conductor cross-section derive from these directives. Examples of factors influencing cable dimensioning are: nominal AC current, the connected AC backup loads, type of cable, routing method, cable bundling, ambient temperature and maximum desired line losses (for calculation of line losses, see the design software "Sunny Design" from software version 2.0 at www.SMA-Solar.com).

6.2 Overview of the Connection Area

6.2.1 View from Below

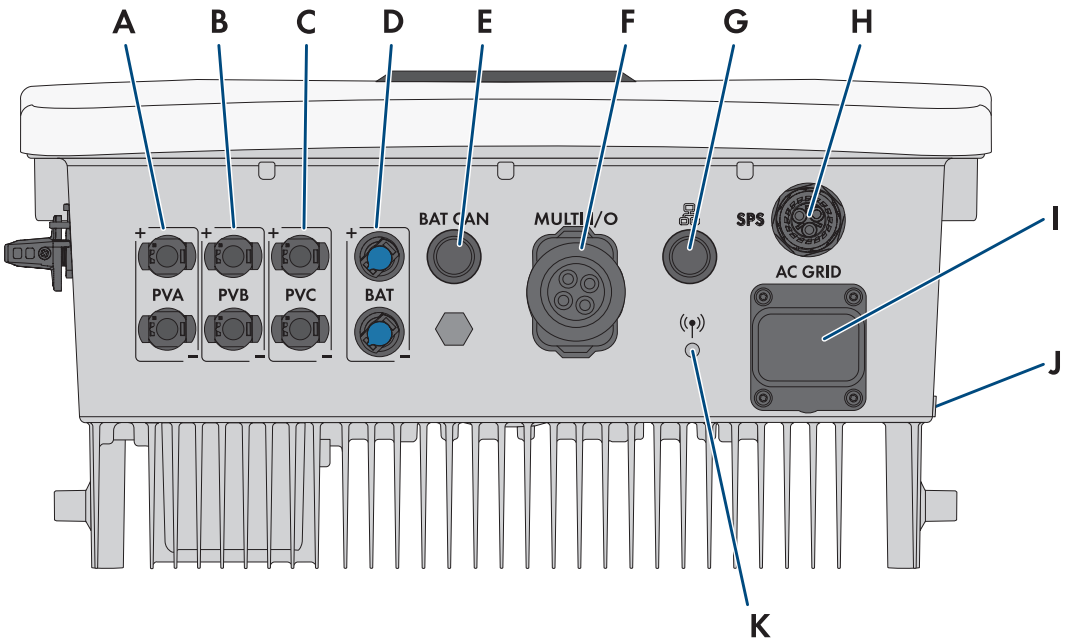

Figure 7: Bottom view of inverter

Position	Designation
A	1 positive and 1 negative DC connector (type Sunclix), input A
B	1 positive and 1 negative DC connector (type Sunclix), input B
C	1 positive and 1 negative DC connector (type Sunclix), input C
D	1 positive and 1 negative DC connector (type Multi-Contact MC4 Evo 2) for battery connection
E	Connection for battery communication for SMA batteries
F	Cable gland for connecting the communication (multi I/O connector)
G	Network port with protective cap
H	**SPS** socket with protective cap for the connection of the socket for the secure power supply operation or for the cabling of the automatic transfer switching device SMA Backup for battery-backup systems.

Position	Designation
I	**AC-GRID** socket with protective cap for AC grid connection
J	Connection point for an additional grounding
K	Jack with protective cap for the WLAN antenna

6.2.2 Overview of Terminals on the Multi I/O

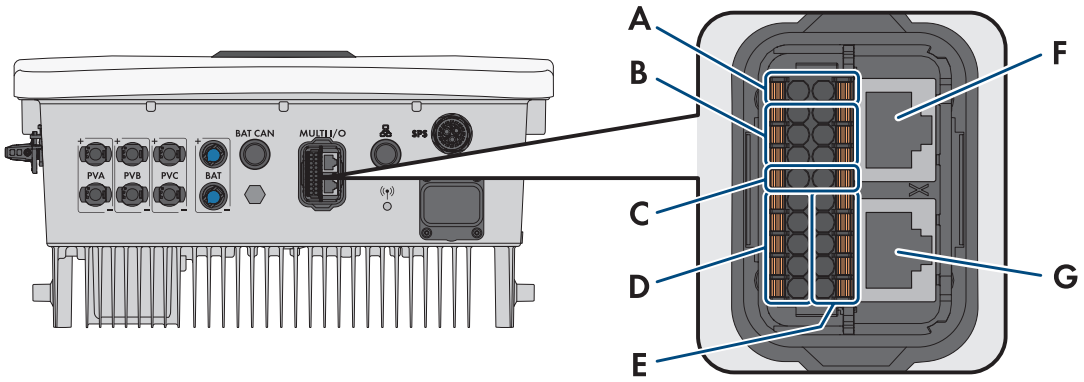

Position	Designation
A	Connection SPS IN
B	Connections for multifunction relay (MFR)
C	Terminal for digital fast stop
D	Terminal for digital inputs
E	Battery CAN
F	Ethernet 2
G	AUX connection (without function)

6.3 Electrical connection procedure

This section describes the procedure for the electrical connection of the product. It provides an overview of the steps, which must be performed in the prescribed sequence.

Procedure		See
1.	Ensure that the requirements for the electrical connection are fulfilled.	Section 6.1, page 31
2.	Connecting the PV Array	Section 6.4.3, page 38
3.	Connecting the power cable of the battery	Section 6.5.4, page 42
4.	Connecting the Inverter to the Utility Grid	Section 6.6, page 44
5.	Connecting the external protective grounding	Section 6.7, page 47
6.	Connecting the battery communication	Section 6.5.3, page 41
7.	Connecting the battery communication to Multi I/O	Section 6.5.6, page 43
8.	Connecting the Network Cables	Section 6.8, page 48

Also see:

- Connecting the Inverter to the Utility Grid ⇒ page 44
- Connecting the Network Cables ⇒ page 48
- Connecting the PV Array ⇒ page 38

6.4 DC connection

6.4.1 Overview of DC connectors

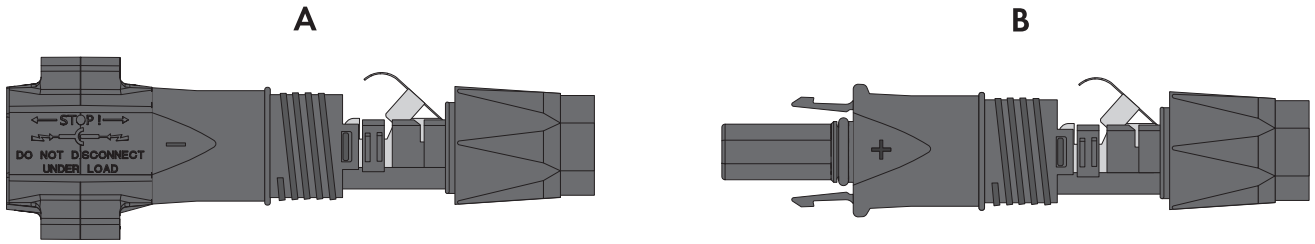

Figure 8: Negative (A) and positive (B) DC connectors

6.4.2 Assembling the PV Connectors (Sunclix)

⚠ QUALIFIED PERSON

For connection to the inverter, all PV module connection cables must be fitted with the PV connectors provided. Assemble the PV connectors as described in the following. The procedure is identical for both connectors (+ and -). The graphics for the procedure are shown for only the positive connector as an example. Pay attention to the correct polarity when assembling the PV connectors. The PV connectors are marked with the symbols "+" and "–".

NOTICE

Destruction of the inverter due to overvoltage

If the open-circuit voltage of the PV modules exceeds the maximum input voltage of the inverter, the inverter can be destroyed due to overvoltage.

- If the open-circuit voltage of the PV modules exceeds the maximum input voltage of the inverter, do not connect any strings to the inverter and check the design of the PV system.

Procedure:

1. Strip approx. 15 mm of the cable insulation.
2. Insert the stripped cable into the PV connector up to the stop. When doing so, ensure that the stripped cable and the PV connector are of the same polarity.

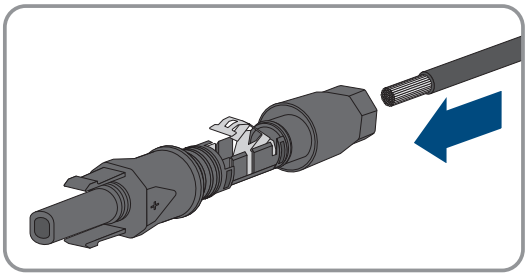

3. Press the clamping bracket down until it audibly snaps into place.

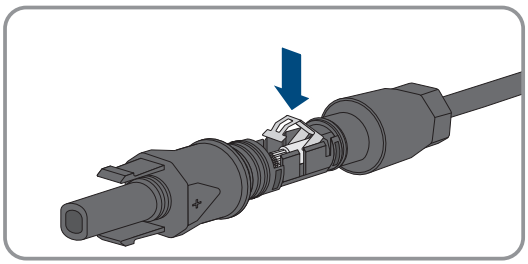

☑ The stranded wire can be seen inside the clamping bracket chamber.

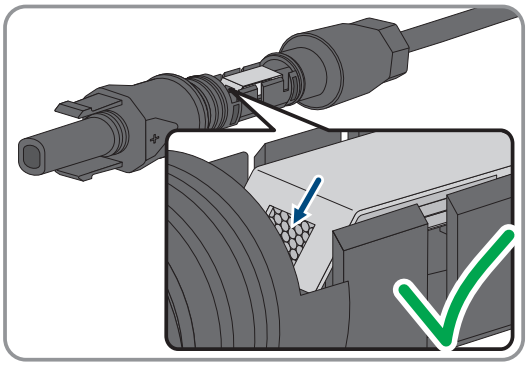

4. If the stranded wire is not visible in the chamber, the cable is not correctly inserted and the connector must be reassembled. To do this, the cable must be removed from the connector.
5. To take out the cable, loosen the clamping bracket. To do so, insert a screwdriver (blade width: 3.5 mm) into the clamping bracket and pry the clamping bracket open.
6. Remove the cable and go back to step 2.

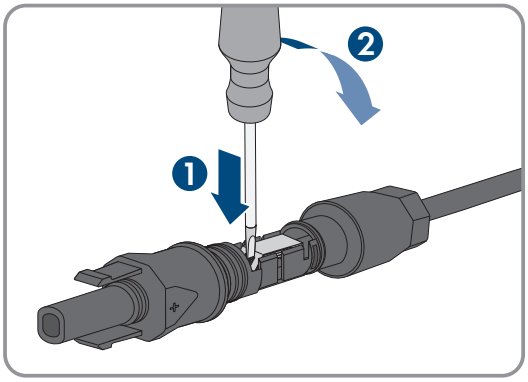

7. Push the swivel nut up to the thread and tighten (torque: 2 Nm).

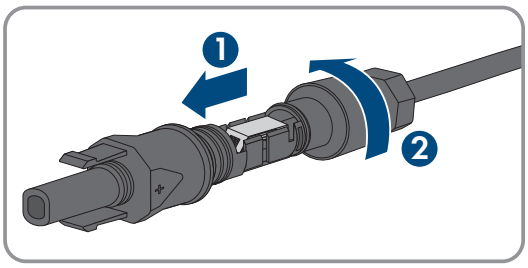

6.4.3 Connecting the PV Array

⚠ QUALIFIED PERSON

NOTICE

Damage to the product due to ground fault on DC side during operation

Due to the transformerless topology of the product, the occurrence of ground faults on DC side during operation can lead to irreparable damage. Damages to the product due to a faulty or damaged DC installation are not covered by warranty. The product is equipped with a protective device that checks whether a ground fault is present during the starting sequence. The product is not protected during operation.

- Ensure that the DC installation is carried out correctly and no ground fault occurs during operation.

NOTICE

Destruction of the inverter due to overvoltage

If the open-circuit voltage of the PV modules exceeds the maximum input voltage of the inverter, the inverter can be destroyed due to overvoltage.

- If the open-circuit voltage of the PV modules exceeds the maximum input voltage of the inverter, do not connect any strings to the inverter and check the design of the PV system.

NOTICE

Damage to the product due to sand, dust and moisture ingress if the DC inputs are not closed

The product is only properly sealed when all unused DC inputs are closed with DC connectors or sealing plugs. Sand, dust and moisture penetration can damage the product and impair its functionality.

- Do not remove the sealing plugs from DC inputs that are not required.

Procedure:

1. Ensure that the AC miniature circuit breaker is switched off and that it cannot be reconnected.
2. Switch off the DC load-break switch of the inverter.
3. Measure the PV array voltage. Ensure that the maximum input voltage of the inverter is adhered to and that there is no ground fault in the PV array.
4. Check whether the DC connectors have the correct polarity. If the DC connector is equipped with a DC cable of the wrong polarity, the DC connector must be reassembled. When this is done, the respective DC cable must always have the same polarity as the DC connector.
5. Ensure that the open-circuit voltage of the PV array does not exceed the maximum input voltage of the inverter.
6. Connect the assembled DC connectors to the inverter.
   ☑ The DC connectors snap into place.
7. Ensure that all DC connectors are securely in place.
8. If any DC inputs are not in use, ensure that the sealing plug is inserted.

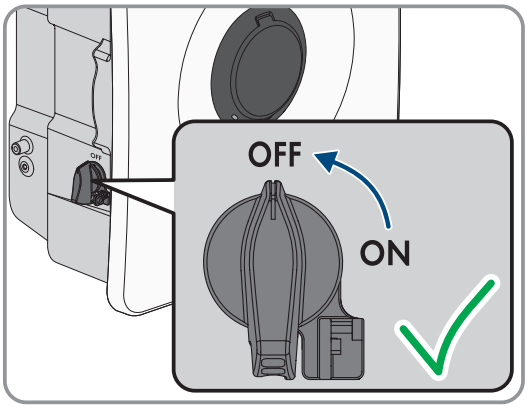

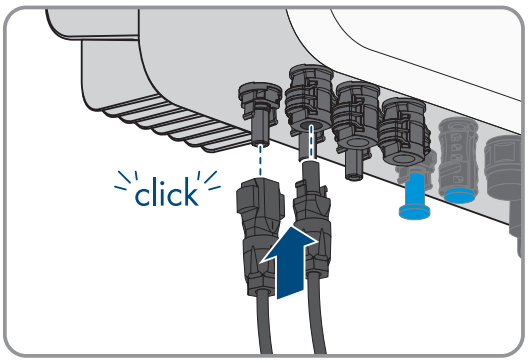

6.5 Connection of batteries

6.5.1 Electrical Connection Procedure for a Single Battery

This section describes the procedure for the electrical connection of the product. It provides an overview of the steps, which must be performed in the prescribed sequence.

Procedure		See
1.	Ensure that the requirements for the electrical connection are fulfilled.	Requirements for the electrical connection
2.	Assembling the DC Connectors (type MC4 Evo2)	Section 6.5.2, page 40

Procedure		See
3.	Connecting the Battery Communication for SMA Home Storage and SMA Home Storage M	Section 6.5.3, page 41
4.	Connecting the power cable of the battery	Section 6.5.4, page 42
5.	Connecting the battery communication to Multi I/O	Section 6.5.6, page 43

6.5.2 Assembling the DC Connectors (MC4)

⚠ QUALIFIED PERSON

Assemble the DC connectors as described in the following. The procedure is identical for both connectors (+ and -). The graphics for the procedure are shown for only the positive connector as an example. Pay attention to the correct polarity when assembling the DC connectors. The DC connectors are marked with the symbols "+" and "-".

Procedure:

1. Strip approx. 6.5 mm of the cable insulation.
2. Attach the supplied crimp contacts to the ends of the conductors. When doing so, ensure that the stripped cable and the bootlace ferrules match the polarities of the DC connectors.

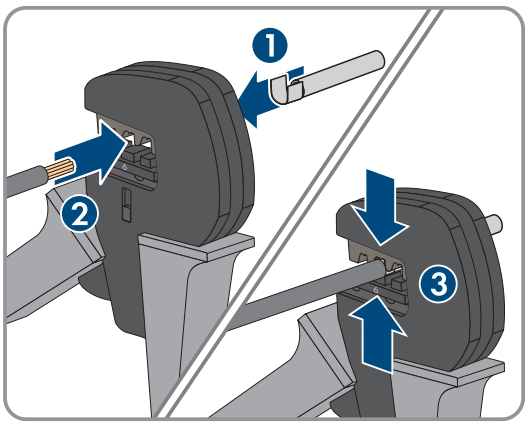

3. Insert the cable into the DC connector up to the stop. When doing so, ensure that the cable and the DC connector are of the same polarity.

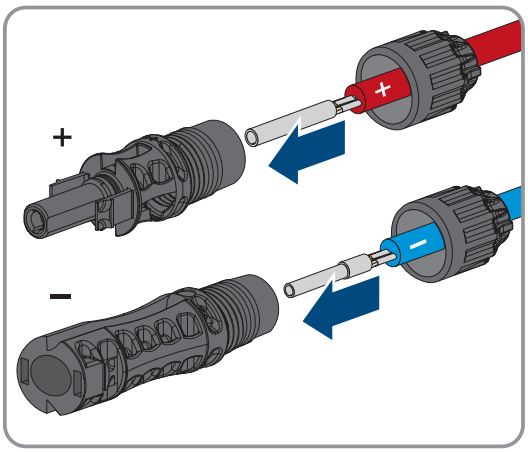

4. Tighten the union nut.

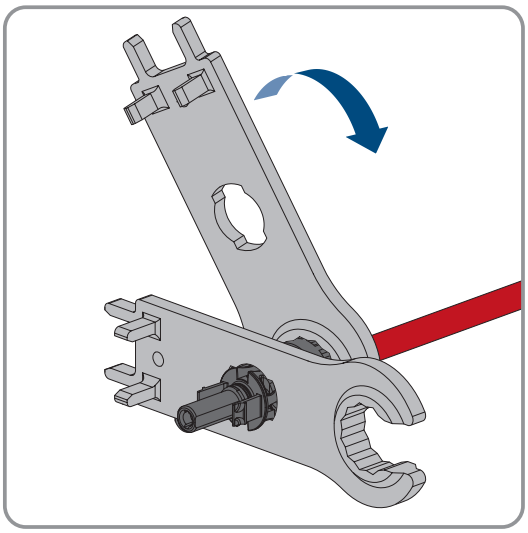

6.5.3 Connecting the Battery Communication for SMA Home Storage and SMA Storage M

⚠ QUALIFIED PERSON

To make the connection for an SMA Home Storage or SMA Storage M, proceed as follows.

i Communication between inverter and battery

- Communication between the inverter and the battery takes place via the battery communication cable via CAN bus.

Additionally required material (not included in the scope of delivery):

- Network cable
- Where required: Field-assembly RJ45 connector.

Procedure:

1. Unscrew the protective cap from input **BAT CAN** on the enclosure of the inverter.
2. Retrieve the cable gland for the connection from the scope of delivery.
3. Loosen the union nut and remove the sealing plug from the threaded sleeve.

4. Feed the network cable through the union nut, the sealing plug, and the threaded sleeve.

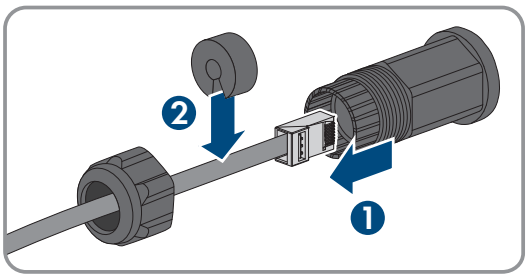

5. Press the sealing plug into the threaded sleeve.
6. Feed the communication cable through the union nut, the sealing plug, and the threaded sleeve.
7. Turn the threaded sleeve onto the thread of the network port on the product and turn the union nut onto the threaded sleeve.
8. Tug lightly to ensure that the network cable is secure.

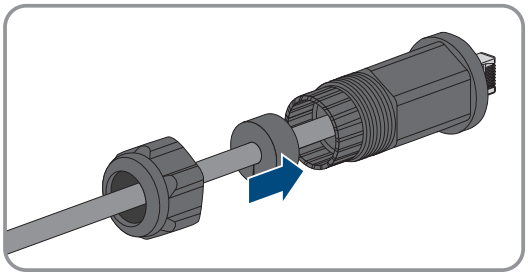

6.5.4 Connecting the power cable of the battery

⚠ QUALIFIED PERSON

NOTICE

Damage to the DC connectors due to the use of contact cleaner of other cleaning agents

Some contact cleaners or other cleaning agents may contain substances that decompose the plastic of the DC connectors.

- Do not use contact cleaners or other cleaning agents for cleaning the DC connectors.

i Observe manufacturer's specifications for battery power cables

When crimping battery power cables, the appropriate tool, correct cable cross-section, proper insulation stripping length, and a firm but non-damaging crimp are essential for a safe and conductive connection. Make sure not to damage the stranded wires and to insert and tighten all components correctly, especially the strain relief, to ensure a durable, moisture-proof, and abrasion-resistant connection.

If there are several inverters and only one battery in the system, the battery should be connected to the inverter that is to be configured as the System Manager.

Requirements:

- The battery power cables must be pre-assembled (see Section 6.5.2 "Assembling the DC Connectors (MC4)", page 40).

Procedure:

1. Remove the sealing plugs from the terminals BAT + and BAT -.
2. Connect the DC connectors to the inverter.
   ☑ The DC connectors snap into place.
3. Ensure that all DC connectors are securely in place.

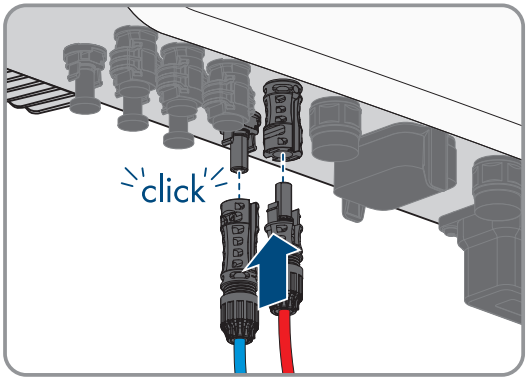

6.5.5 PIN assignment battery communication on Multi I/O

Digital input CAN	Pin	Assignment
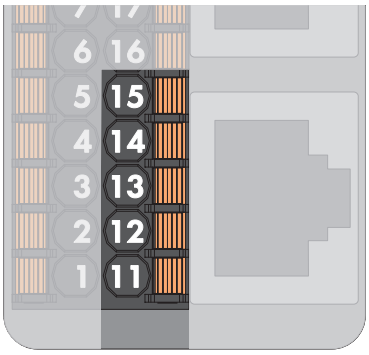	15	Do not use
	14	BAT_EN
	13	EN_GND
	12	CAN_L
	11	CAN_H

6.5.6 Connecting the battery communication to Multi I/O

⚠ QUALIFIED PERSON

For the connection of the battery communication with batteries by other manufacturers, proceed as follows.

Communication between inverter and battery

- Communication between the inverter and the battery takes place via the battery communication cable via CAN bus.

Additionally required material (not included in the scope of delivery):

- 1 battery communication cable for the communication between inverter and battery.
- Bootlace ferrules (only for multi-core stranded wire, usable length of the ferrule at least 12 mm).

Procedure:

1. Disconnect the inverter from voltage sources and secure it against being switched on again (see Section 9 "Disconnecting the Inverter from Voltage Sources", page 68).
2. Ensure that the battery is switched off.
3. Remove the protective cover from the MULTI I/O terminal.
4. Unscrew the union nut from the threaded sleeve of the Multi I/O connector.
5. Remove the four-hole cable support sleeve from the cable gland.
6. Pull the communication assembly out of the cable gland.
7. Thread the swivel nut over the cable.
8. Remove the plug from one of the enclosure openings and cut into the enclosure opening with a utility knife.
9. Insert the cable into the enclosure opening.
10. Strip off a maximum of 6 mm of the cable insulation.

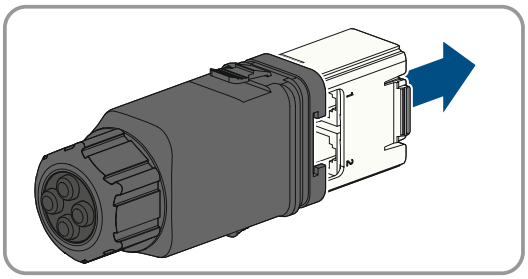

11. Connect the conductors of the connection cable to the digital inputs **CAN**. To do so, plug the conductors into the conductor entries and close the conductor entries. Observe the connector assignment (see Section 6.5.5 "PIN assignment battery communication on Multi I/O", page 43).
12. Ensure that all conductors are correctly connected.
13. Ensure that the conductors sit securely in the terminal points.

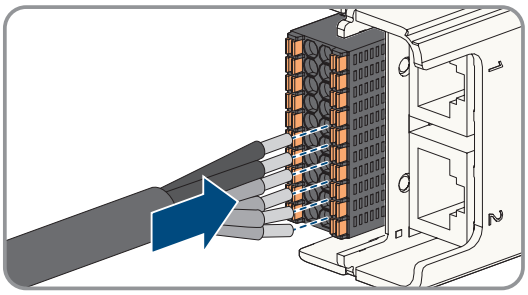

14. Plug the communication assembly onto the cable gland.

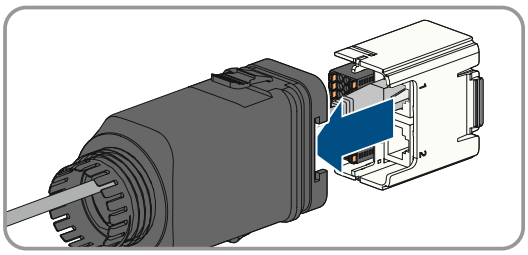

15. Fasten the union nut on the cable gland and screw hand-tight.
16. Plug the communication assembly with the cable gland into the terminal **MULTI I/O** on the inverter.
17. Connect the communication cable to the terminal for the battery communication. Pay attention to the assignment of the terminal and communication connection on the battery and make sure that **CAN L** and **CAN H** consist of a pair of conductors. For additional information on how to connect the battery, see Technical Information "Approved Batteries and Information on Battery Communication Connection" at www.SMA-Solar.com.

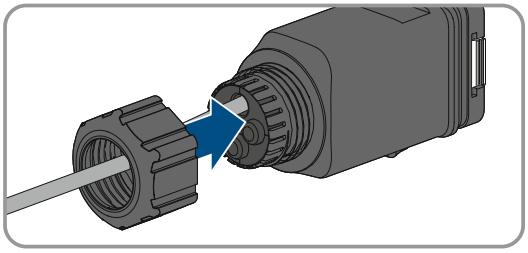

Also see:

- Disconnecting the Inverter from Voltage Sources ⇒ page 68

6.6 Connecting the Inverter to the Utility Grid

⚠ QUALIFIED PERSON

Requirements:

- The connection requirements of the grid operator must be met.
- The grid voltage must be within the permissible range. The exact operating range of the inverter is specified in the operating parameters.

Procedure:

1. Disconnect the AC miniature circuit breaker from all 3 line conductors and secure against reconnection.
2. Ensure that the DC load-break switch has been switched off and secured against reconnection.
3. Ensure that the battery is switched off.

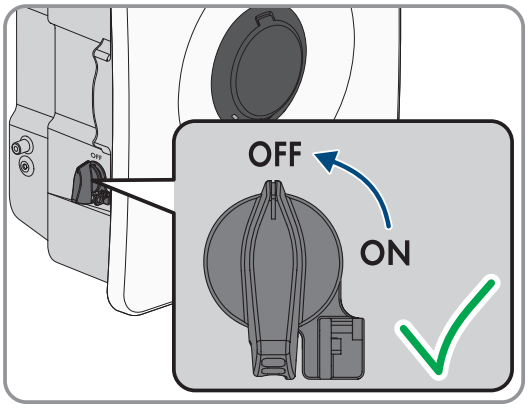

4. Remove the tool for unlocking the AC connector.

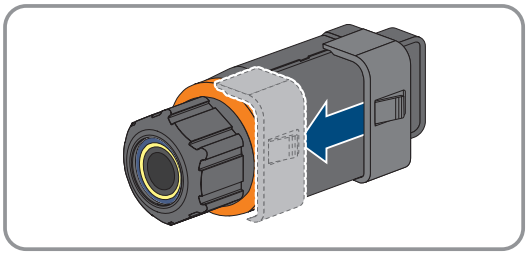

5. Unscrew the union nut of the AC connector.

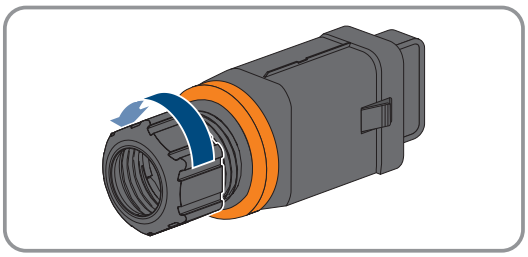

6. Remove the sealing rings from the AC connector.

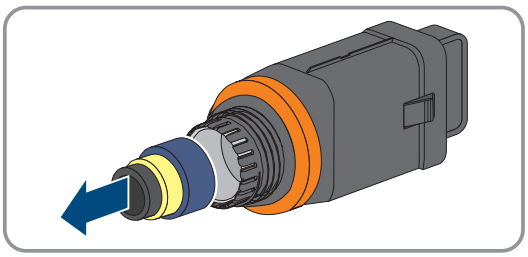

7. Pull the terminal out of the connector enclosure using the locking lever.

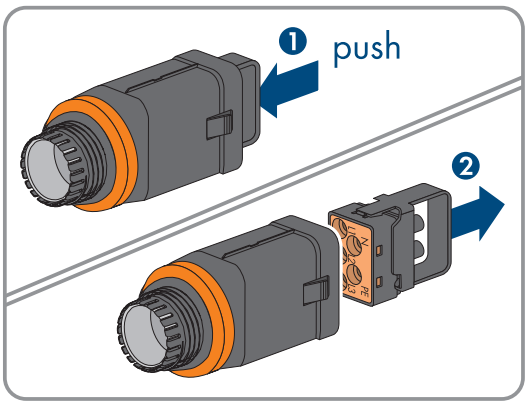

8. Insert the appropriate sealing ring based on the cable diameter.

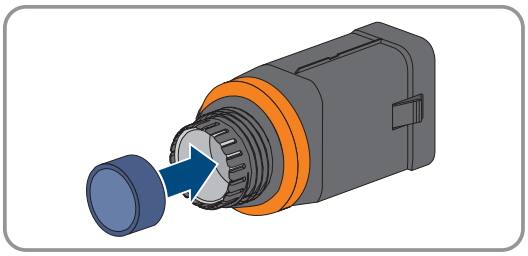

9. Route the AC cable through the union nut, sealing ring, and connector enclosure.
10. Dismantle the AC cable (60 mm).
11. Strip off the insulation of L1, L2, L3, N, and PE (16 mm).

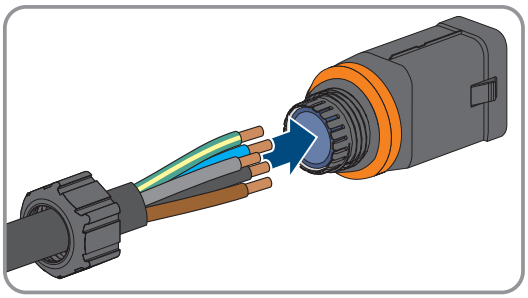

12. Insert the conductors L1, L2, L3, N, and PE into the terminal according to the labeling and tighten the terminal screws using the supplied tool (tightening torque: 2 Nm).
13. Ensure that the conductors are correctly assigned and firmly seated in the terminal.

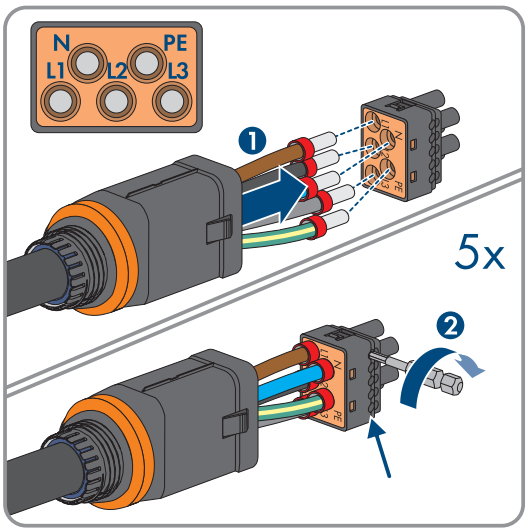

14. Insert the terminal into the connector enclosure. The terminal must snap audibly into place.

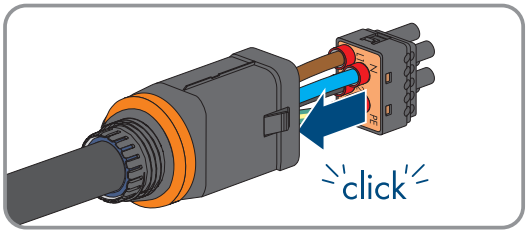

15. Tighten the swivel nut on the connector enclosure.

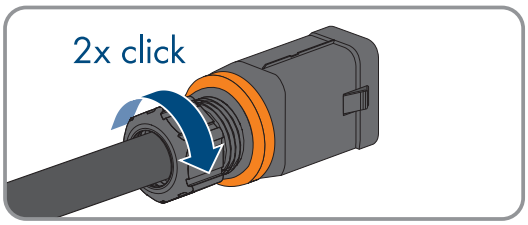

16. Remove the protective cap from the **AC GRID** socket.

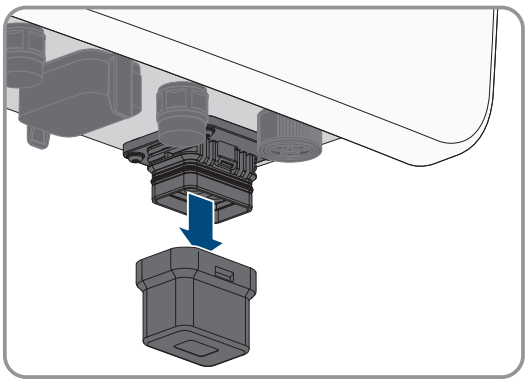

17. Insert the AC connector into the **AC GRID** socket. The AC connector must snap audibly into place.

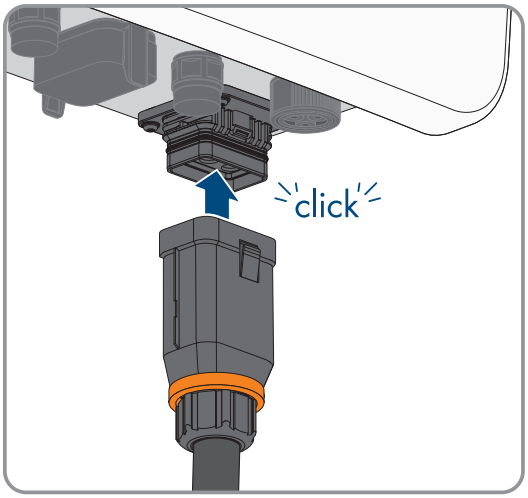

6.7 Connecting the external protective grounding

⚠ QUALIFIED PERSON

Depending on country-specific requirements, an additional protective grounding of the inverter is required to protect from touch current in case the grounding conductor fails at the terminal of the AC cable.

The inverter features a ground connection with 1 connection point for protective grounding (e.g. when using a grounding electrode).

The connection point is marked with the following symbol: ⏚

The required M6x14 screw with spring washer and washer is already installed on the inverter.

Additionally required material (not included in the scope of delivery):

- 1 grounding cable
- 1 ring terminal lug M6

Cable requirements:

- Cross-section of grounding cable corresponds to the grounding conductor at the **AC GRID** terminal, but at least 2.5 mm^2

Procedure:

1. Strip the grounding cable insulation.
2. Crimp the ring terminal lug to the cable.
3. Tighten the screw with washer and spring washer at the connection point for the additional grounding (TX30, tightening torque: 3 Nm).

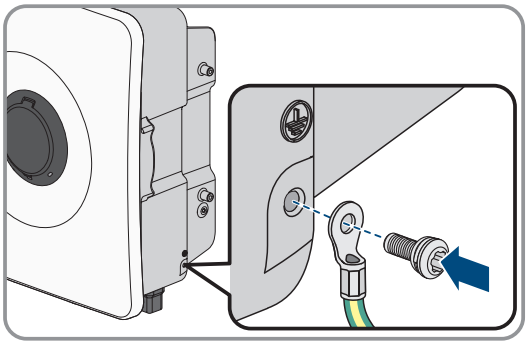

6.8 Connecting the Network Cables

⚠ QUALIFIED PERSON

⚠ DANGER

Danger to life due to electric shock in case of overvoltages and if surge protection is missing

Overvoltages (e.g., in the event of a flash of lightning) can be further conducted into the building and to other connected devices in the same network via the network cables or other data cables if there is no surge protection. Touching live parts and cables results in death or lethal injuries due to electric shock.

- Ensure that all devices in the same network and the battery are integrated into the existing surge protection.
- When laying the network cables or other data cables outdoors, it must be ensured that a suitable surge protection device is provided at the transition point of the cable from the product or the battery outdoors to the inside of a building.

NOTICE

Product damage due to moisture penetration

Moisture penetration can damage the product and impair its functionality of the product.

- Connect the network cable with the supplied RJ45 protective sleeve to the product.

Additionally required material (not included in the scope of delivery):

- Network cable
- Where required: Field-assembly RJ45 connector.

Procedure:

1. Disconnect the inverter from voltage sources and secure it against being switched on again (see Section 9 "Disconnecting the Inverter from Voltage Sources", page 68).
2. When using a self-assembly network cable, assemble the RJ45 connectors and connect them to the network cable (see connector documentation).

3. Unscrew the protective cap on the enclosure of the inverter.
4. Retrieve the cable gland for the connection from the scope of delivery.
5. Loosen the union nut and remove the sealing plug from the threaded sleeve.

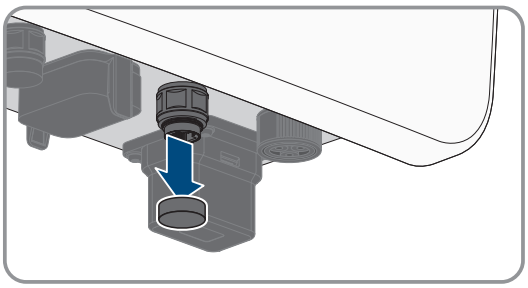

6. Feed the network cable through the union nut, the sealing plug, and the threaded sleeve.

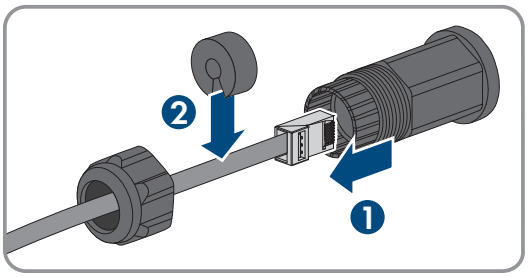

7. Press the sealing plug into the threaded sleeve.

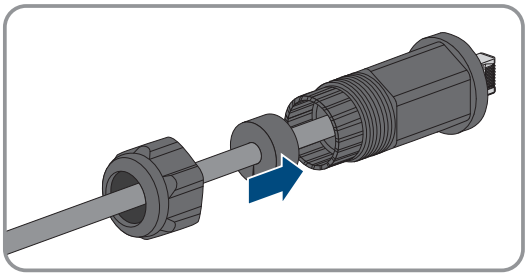

8. Insert the network plug of cable into the product's network port. Ensure that the cable is correctly locked in place.

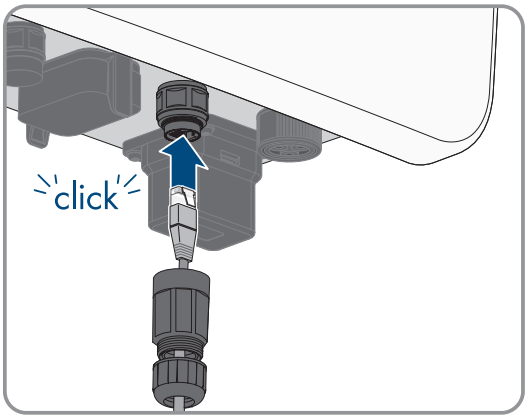

9. Turn the threaded sleeve onto the thread of the network port on the product and turn the union nut onto the threaded sleeve.
10. Tug lightly to ensure that the network cable is secure.
11. If the inverter is installed outdoors, install overvoltage protection for all components in the network.
12. To integrate the inverter into a local network, connect the other end of the network cable to the local network (e.g., via a router).

6.9 Mounting the WLAN Antenna

⚠ QUALIFIED PERSON

Requirement:

☐ The Wi-Fi antenna supplied must be used.

Procedure:

1. Remove the protective cap from the jack on the inverter.
2. Plug the Wi-Fi antenna into the jack and screw tight (torque: 1 Nm).
3. Pull on the Wi-Fi antenna to ensure that the Wi-Fi antenna is securely in place.

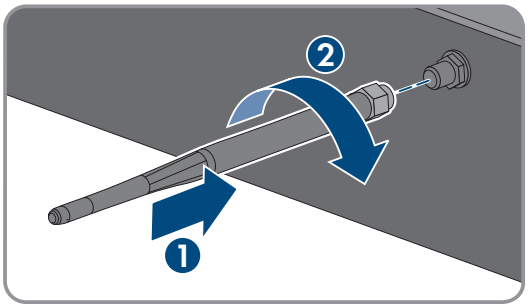

Also see:

- Disconnecting the Inverter from Voltage Sources ⇒ page 68

6.10 Connection for Active Power Limitation

6.10.1 Procedure for Connecting the Active Power Limitation

Procedure		See
1.	Select the function depending on the application.	Section 4.5.13, page 23
2.	Connect to the digital input.	Connecting the Digital Input
3.	Configure the settings for each application during commissioning.	• For systems with external setpoint • For systems with manual setpoint

6.10.2 Digital input DI: D1-D4, Vcc

At the digital input DI: D1-D4, Vcc you can connect a ripple control receiver or a remote terminal unit with which the active power output of the inverter can be limited.

6.10.3 Pin assignment DI: D1-D4, Vcc

Digital input D1-4	Pin	Assignment
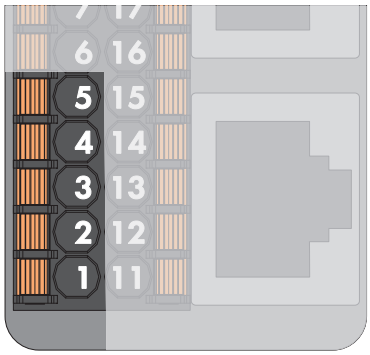	5	Voltage supply output (12 V)
	4	Digital input 4
	3	Digital input 3
	2	Digital input 2
	1	Digital input 1

6.10.4 Circuitry overview DI: D1-D4, Vcc

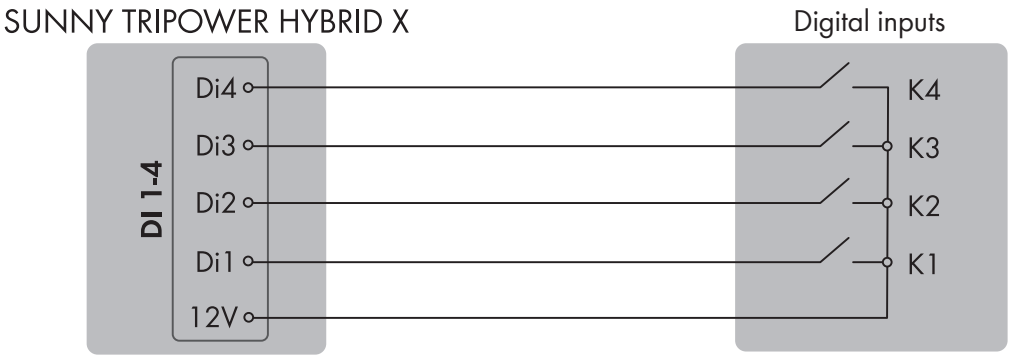

Figure 10: Connection of a remote terminal unit to the digital input DI D1-D4, Vcc of the Sunny Tripower Hybrid

6.10.5 Connecting the Digital Input

⚠ QUALIFIED PERSON

1. Connect the connection cable to the ripple control receiver or the remote terminal unit (see the manual from manufacturer).
2. Disconnect the inverter from voltage sources and secure it against being switched on again (see Section 9 "Disconnecting the Inverter from Voltage Sources", page 68).
3. Remove the protective cover from the MULTI I/O terminal.
4. Unscrew the union nut from the threaded sleeve of the Multi I/O connector.
5. Remove the four-hole cable support sleeve from the cable gland.
6. Pull the communication assembly out of the cable gland.
7. Thread the swivel nut over the cable.
8. Remove the plug from one of the enclosure openings and cut into the enclosure opening with a utility knife.
9. Insert the cable into the enclosure opening.
10. Strip off a maximum of 6 mm of the cable insulation.

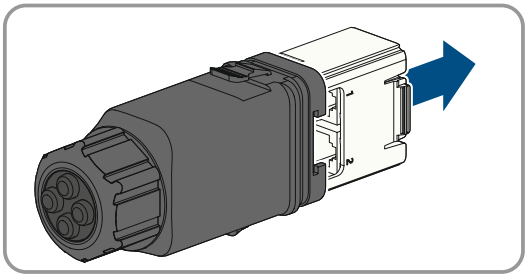

11. Connect the conductors of the connection cable to the digital inputs **DI: D1-D4, Vcc**. To do so, plug the conductors into the conductor entries and close the conductor entries. Observe the connector assignment.
12. Ensure that all conductors are correctly connected.
13. Ensure that the conductors sit securely in the terminal points.

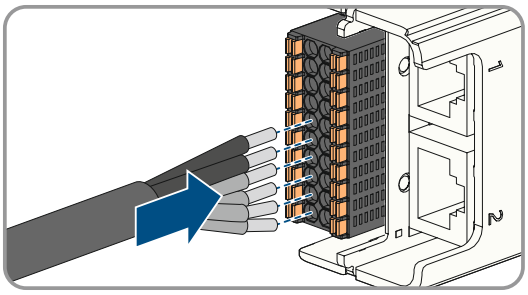

14. Plug the communication assembly onto the cable gland.

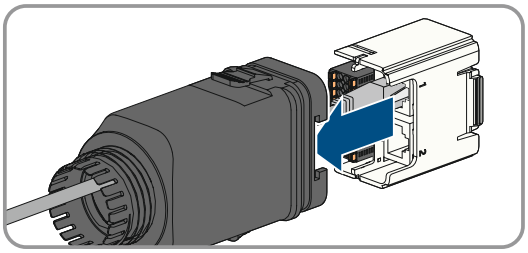

15. Fasten the union nut on the cable gland and screw hand-tight.
16. Plug the communication assembly with the cable gland into the terminal **MULTI I/O** on the inverter.

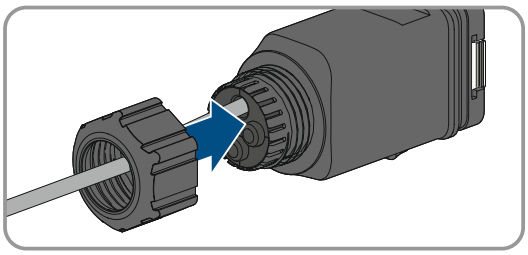

6.11 Terminal for digital fast-stop input

6.11.1 Procedure for Connecting to the Fast-Stop Input

Procedure		See
1.	Select the function depending on the application.	• Section 4.5.16, page 24
2.	Connect the contact for fast stop to the digital input.	• Connecting contact for fast stop
3.	Activate the function either during commissioning in the **Grid Management Service** step of the inverter's installation assistant or subsequently via the settings in the inverter's user interface.	• Configuration using the commissioning wizard • Settings via the user interface of the inverter for fast stop • Settings via the user interface of the inverter for grid and PV system protection

Also see:

- Use of the user interface powered by ennexOS ⇒ page 67

6.11.2 Pin assignment for fast stop

Digital input	Pin	Assignment
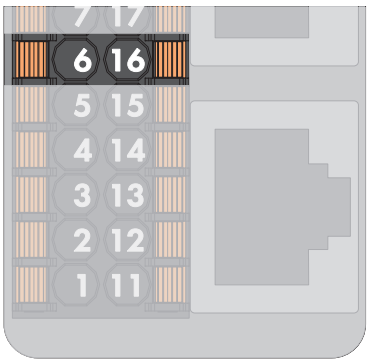	6	Voltage supply output (12 V)
	16	Digital input (fast stop)

6.11.3 Fast stop circuitry overview

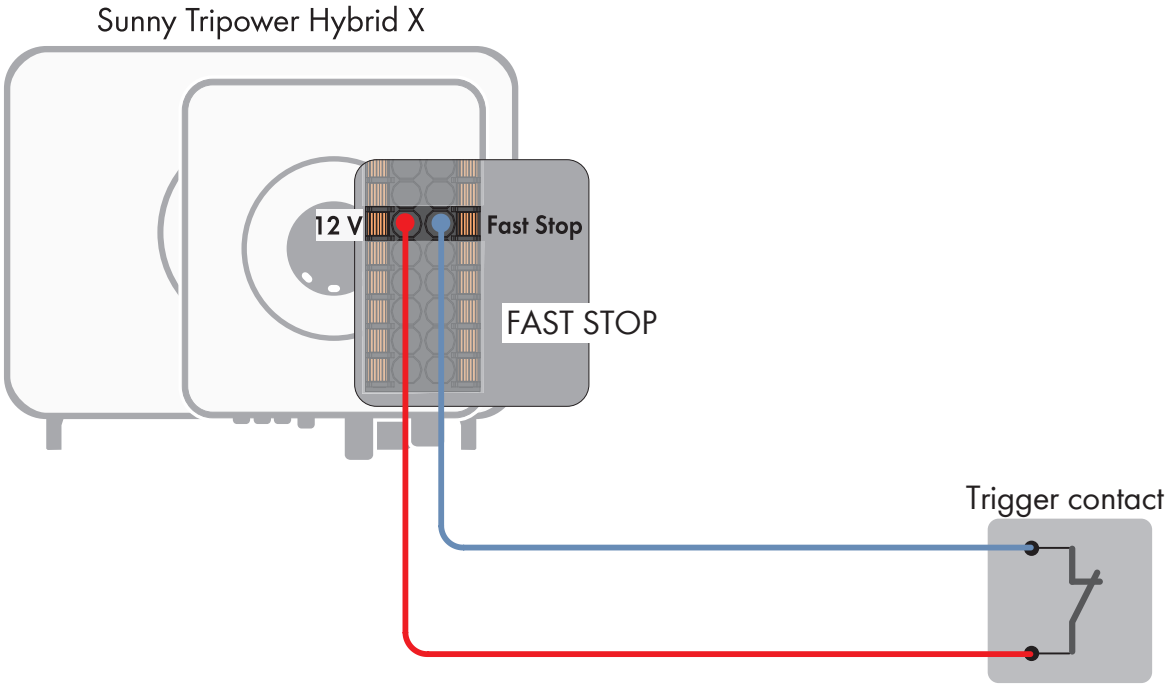

Figure 11: Example of the circuitry for connecting a trigger contact for the fast stop.

6.11.4 Connecting contact for fast stop

⚠ QUALIFIED PERSON

1. Connect the connection cable to the ripple control receiver or the remote terminal unit (see the manual from manufacturer).
2. Disconnect the inverter from voltage sources and secure it against being switched on again (see Section 9 "Disconnecting the Inverter from Voltage Sources", page 68).
3. Remove the protective cover from the MULTI I/O terminal.
4. Unscrew the union nut from the threaded sleeve of the Multi I/O connector.
5. Remove the four-hole cable support sleeve from the cable gland.
6. Pull the communication assembly out of the cable gland.
7. Thread the swivel nut over the cable.
8. Remove the plug from one of the enclosure openings and cut into the enclosure opening with a utility knife.
9. Insert the cable into the enclosure opening.
10. Strip off a maximum of 6 mm of the cable insulation.

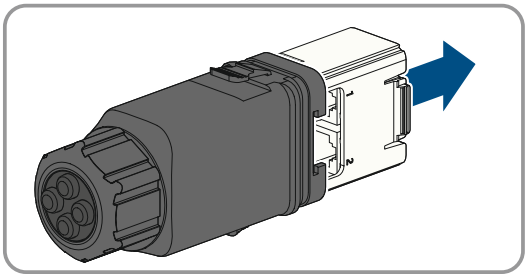

11. Connect the conductors of the connection cable to the digital inputs **FAST STOP**. To do so, plug the conductors into the conductor entries and close the conductor entries. Observe the connector assignment.
12. Ensure that all conductors are correctly connected.
13. Ensure that the conductors sit securely in the terminal points.

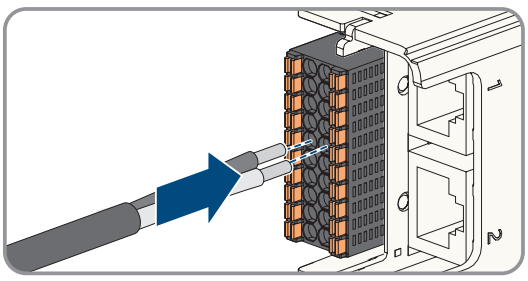

14. Plug the communication assembly onto the cable gland.

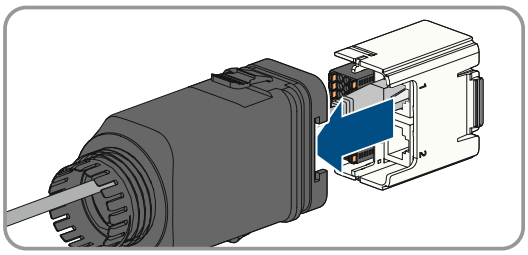

15. Fasten the union nut on the cable gland and screw hand-tight.
16. Plug the communication assembly with the cable gland into the terminal **MULTI I/O** on the inverter.

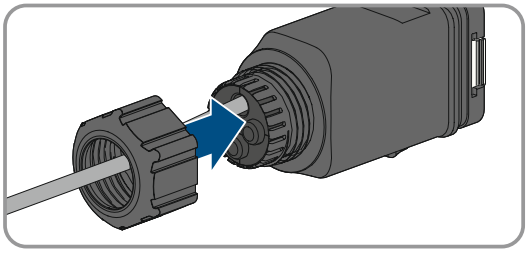

6.12 Connection to the Multifunction Relay

6.12.1 Procedure for Connecting the Multifunction Relay

Procedure		See
1.	Select the operating mode of the multifunction relay according to the application.	Use of the digital output (MFR)
2.	Connect to the multifunction relay according to the operating mode and the associated connection variant.	Connecting the Multifunction Relay
3.	Change the operating mode after commissioning the inverter via the settings in the inverter user interface.	• Configure the digital output (MFR)

6.12.2 Digital output (MFR)

A multifunction relay (MFR) is a digital output that can be specifically configured to the system.

In a system with multiple inverters, you must carry out the connection to a multifunction relay of the System Manager.

6.12.3 Pin assignment for multifunction relay

Digital output	MFR1	MFR2	Assignment
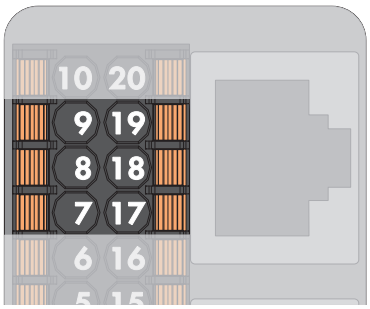	9	19	NO
	8	18	NC
	7	17	COM

6.12.4 Connecting the Multifunction Relay

⚠ QUALIFIED PERSON

1. Connect the connection cable to the ripple control receiver or the remote terminal unit (see the manual from manufacturer).
2. Disconnect the inverter from voltage sources and secure it against being switched on again (see Section 9 "Disconnecting the Inverter from Voltage Sources", page 68).
3. Remove the protective cover from the MULTI I/O terminal.
4. Unscrew the union nut from the threaded sleeve of the Multi I/O connector.
5. Remove the four-hole cable support sleeve from the cable gland.
6. Pull the communication assembly out of the cable gland.
7. Thread the swivel nut over the cable.
8. Remove a plug from one of the enclosure openings.
9. Insert the cable into the enclosure opening.
10. Strip off a maximum of 6 mm of the cable insulation.

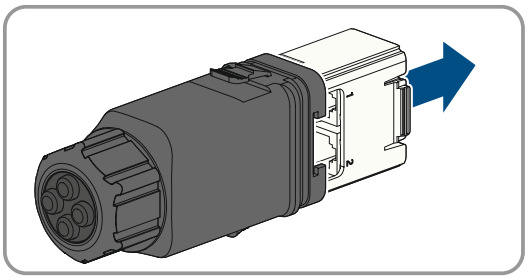

11. Connect the conductors of the connection cable to the digital inputs **COM, NC, NO**. To do so, plug the conductors into the conductor entries and close the conductor entries. Observe the connector assignment.
12. Ensure that all conductors are correctly connected.
13. Ensure that the conductors sit securely in the terminal points.

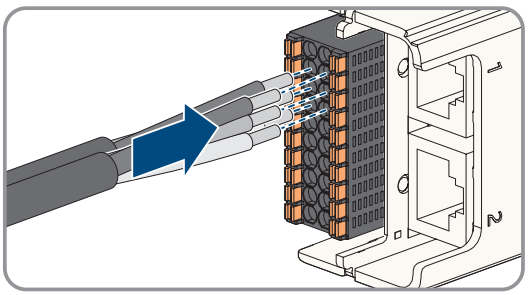

14. Plug the communication assembly onto the cable gland.

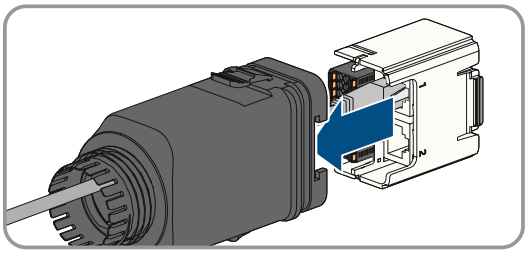

15. Fasten the union nut on the cable gland and screw hand-tight.
16. Plug the communication assembly with the cable gland into the terminal **MULTI I/O** on the inverter.

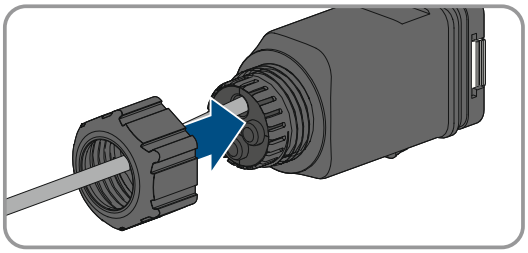

6.13 Connection for Backup Operation

6.13.1 Connection Procedure for Backup Operation

Procedure	
1.	Determine the operating mode (secure power supply operation or battery-backup operation). For secure power supply operation, 1 standard commercial switch and 1 socket is required (not included in the scope of delivery)
2.	If there are multiple inverters in the system, the terminal of the automatic transfer switching device must be connected to the inverter that is configured as the System Manager. This inverter also requires a connected battery.
3.	Backup operation can be set during the commissioning of the inverter, via the settings in the user interface of the inverter or via the 360° app.

6.13.2 Pin Assignment for Signal Cables

SPS	Pin	Assignment
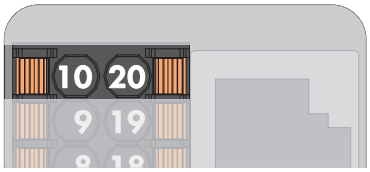	10	SPS 1 IN
	20	SPS 2 IN

6.13.3 Connecting Signal Cables for Backup Operation

⚠ QUALIFIED PERSON

1. Disconnect the inverter from voltage sources and secure it against being switched on again (see Section 9 "Disconnecting the Inverter from Voltage Sources", page 68).
2. Remove the protective cover from the MULTI I/O terminal.
3. Unscrew the union nut from the threaded sleeve of the Multi I/O connector.
4. Remove the four-hole cable support sleeve from the cable gland.
5. Pull the communication assembly out of the cable gland.
6. Thread the swivel nut over the cable.
7. Remove the plug from one of the enclosure openings and cut into the enclosure opening with a utility knife.
8. Insert the cable into the enclosure opening.
9. Strip off a maximum of 6 mm of the cable insulation.

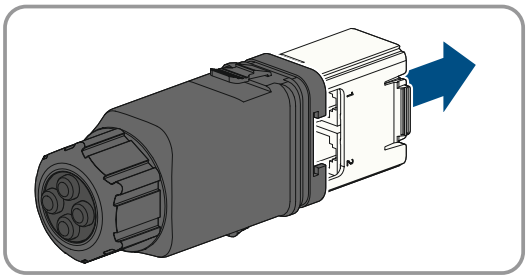

10. Connect the conductors of the connection cable to the digital inputs **SPS IN**. To do so, plug the conductors into the conductor entries and close the conductor entries. Observe the connector assignment.
11. Ensure that all conductors are correctly connected.
12. Ensure that the conductors sit securely in the terminal points.

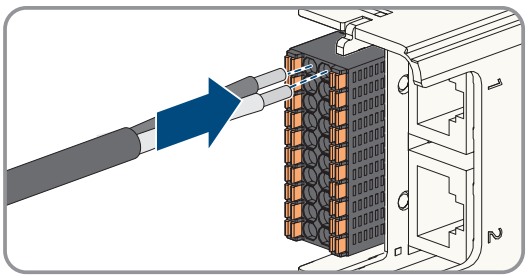

13. Plug the communication assembly onto the cable gland.

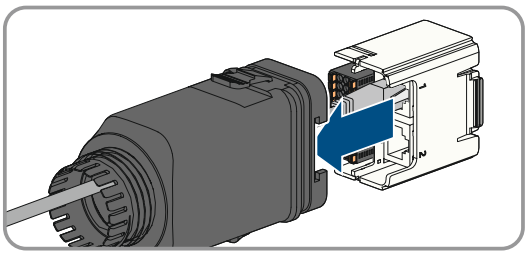

14. Fasten the union nut on the cable gland and screw hand-tight.
15. Plug the communication assembly with the cable gland into the terminal **MULTI I/O** on the inverter.

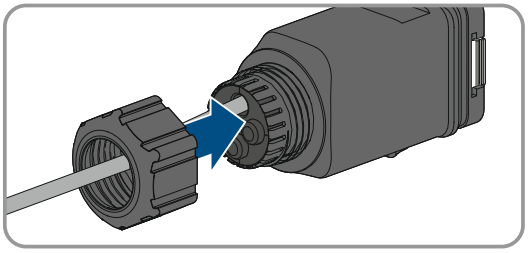

6.13.4 Connecting the cable for the automatic transfer switching device (SMA Backup)

⚠ QUALIFIED PERSON

Backup electrical loads that can be supplied in the event of a power outage can be connected to the automatic transfer switching device. Follow the manual for the SMA Backup product variants.

Procedure:

1. Disconnect the AC and backup miniature circuit breaker from all 3 line conductors and secure against reconnection.
2. Place a notice on the subdistribution indicating the battery-backup operation of the inverter.

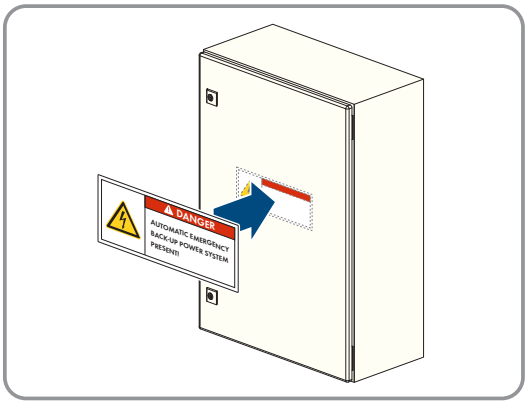

3. Ensure that the DC load-break switch has been switched off and secured against reconnection.
4. Ensure that the battery is switched off.
5. Unscrew the union nut of the cable gland for SPS.
6. Pull the upper part of the terminal off the connector enclosure.
7. Remove the sealing ring from the connector enclosure.

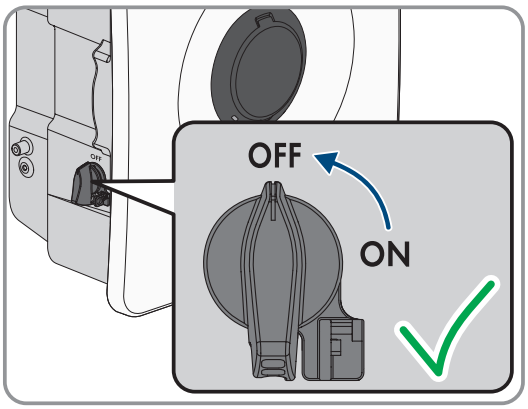

8. Route the cable through the union nut, sealing ring, and connector enclosure.

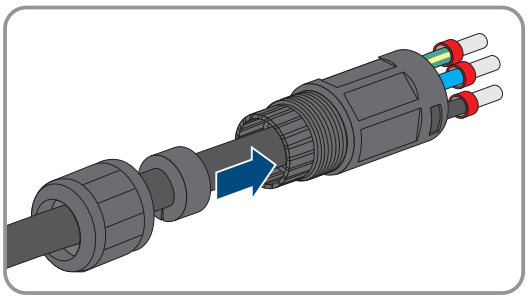

9. Insert the conductors **L**, **N**, and **PE** according to the labeling into the connector and tighten the connector screws (tightening torque: 1 Nm).
10. Ensure that the conductors are correctly assigned and firmly seated in the connector.

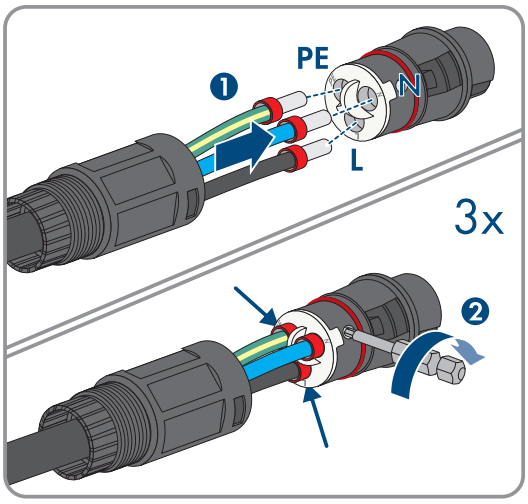

11. Insert the connector enclosure into the cable gland. The terminal must snap audibly into place.
12. Tighten the swivel nut on the connector enclosure.

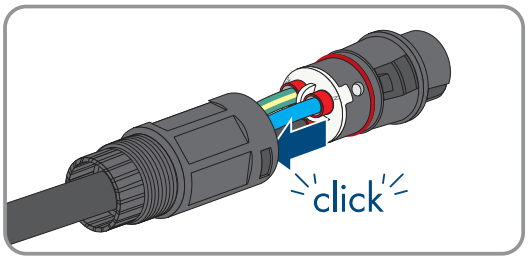

13. Connect the connector to the inverter enclosure.

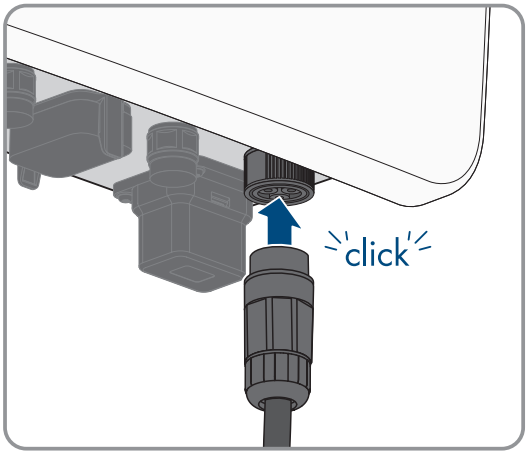

6.13.5 Connecting the cable for secure power supply operation

⚠ QUALIFIED PERSON

Additionally required material (not included in the scope of delivery):

☐ For secure power supply operation: 1 standard commercial socket

Requirements:

☐ The power cables for backup operation must be pre-assembled.

Procedure:

1. Disconnect the AC and backup miniature circuit breaker from all 3 line conductors and secure against reconnection.
2. Place a notice on the subdistribution indicating the battery-backup operation of the inverter.

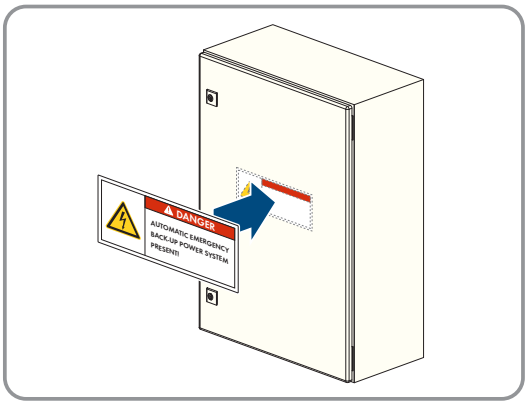

3. Ensure that the DC load-break switch has been switched off and secured against reconnection.
4. Ensure that the battery is switched off.
5. Unscrew the union nut of the cable gland for SPS.
6. Pull the upper part of the terminal off the connector enclosure.
7. Remove the sealing ring from the connector enclosure.

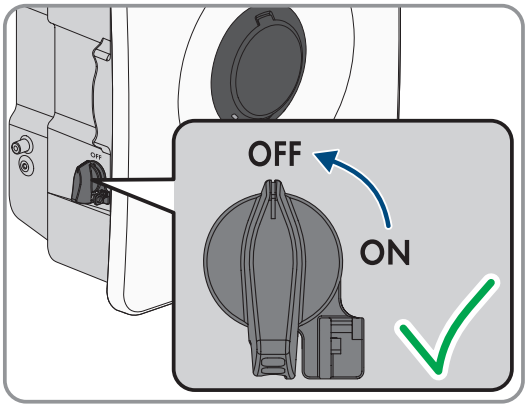

8. Route the cable through the union nut, sealing ring, and connector enclosure.

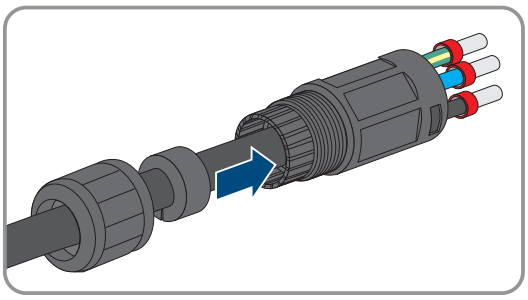

9. **When using the secure power supply function, the neutral conductor must be connected (grounded) to the grounding conductor. This can be accomplished through a cable bridge in the connector or in the socket for the secure power supply operation.**

9. Insert the conductors **L, N** and **PE** according to the labeling into the connector and tighten the connector screws (tightening torque: 1 Nm).
10. Insert the connector enclosure into the cable gland. The terminal must snap audibly into place.
11. Tighten the swivel nut on the connector enclosure.

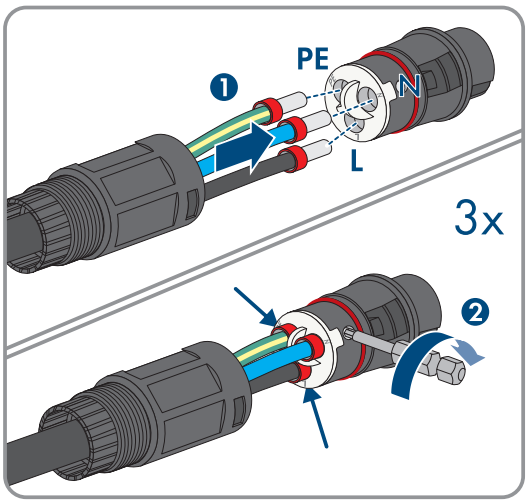

12. Connect the connector to the inverter enclosure.

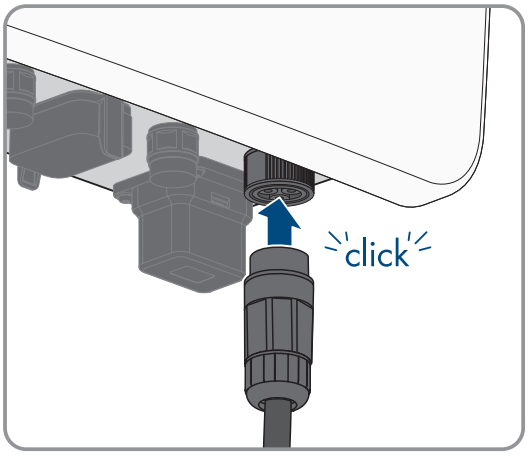

7 Commissioning

7.1 Commissioning Procedure of System with the SMA 360° App

The entire system can be configured with the SMA 360° app following the connection of the individual components. SMA Solar Technology AG recommends using the SMA 360° app (firmware version ≥ 3.0) to configure the system.

Procedure		
.1	Connect and switch on all devices in the system (e.g. inverter, energy meter, battery) and integrate the subordinate devices for commissioning via Wi-Fi into the local network.	Manual of the devices
2.	Carry out the configuration using the commissioning wizard of the SMA 360° app. To do this, scan the QR code of the planned System Manager.	Section 7.3, page 62
3.	Make further settings if necessary (e.g., configure multifunction relay, configure arc-fault circuit interrupter).	Section 8.1, page 67

Also see:

- Switching the Inverter On ⇒ page 61
- Configuring the System with the SMA 360° App ⇒ page 62
- Operation ⇒ page 67

7.2 Switching the Inverter On

⚠ QUALIFIED PERSON

Requirements:

☐ The AC circuit breaker must be correctly rated and mounted.

☐ The product must be correctly mounted.

☐ All cables for the AC connection, DC connection, and communication must be correctly connected.

☐ Unused enclosure openings must be sealed tightly with sealing plugs.

Procedure:

1. Switch on the DC load-break switch.
2. Switch the AC voltage supply on.
3. If the green and red LEDs flash simultaneously during initial commissioning, operation is stopped because no country data set has been set yet. For the inverter to begin operation, the configuration must be completed and a country data set must be set.
4. If the green LED is still flashing, the conditions for activating feed-in operation are not yet met. As soon as the conditions for feed-in operation are met, the inverter starts with feed-in operation and, depending on the available power, the green LED will light up continuously or it will pulse.
5. If the red LED lights up, an event has occurred. Find out which event has occurred and, if necessary, initiate countermeasures.
6. Ensure that the inverter feeds in correctly.

7.3 Configuring the System with the SMA 360° App

⚠ QUALIFIED PERSON

A country data set must be set for feed-in operation

To ensure the inverter starts feed-in operation during initial commissioning, a country data set must be set (e.g., via the product commissioning wizard in the SMA 360 app or on the user interface of the product, or via a System Manger).

If no country data set is set, then feed-in operation will be stopped. This state is signaled by the green and red LEDs flashing simultaneously.

The inverter will automatically start feed-in operation only after the inverter configuration is completed.

The country data set must be set correctly.

If you select a country data set which is not valid for your country and purpose, it can cause a disturbance in the PV system and lead to problems with the grid operator. When selecting the country data set, you must always observe the locally applicable standards and directives as well as the properties of the PV system (e.g. PV system size, grid-connection point).

- If you are not sure which standards and directives are valid for your country or purpose, contact the grid operator.

The grid type must be set correctly

If you select the wrong grid type, it can cause a disturbance in the PV system and lead to problems with the grid operator.

Requirement:

☐ All system components must be switched on (see manual of the products).

☐ The latest firmware must be installed on all system components.

☐ All system components must be located in the same network.

☐ An SMA ID must be available.

Procedure:

1. Download the SMA 360° App from the App Store or Play Store.
2. Open the SMA 360° App and log in with the SMA ID.
3. If a system consists of multiple products and Wi-Fi is to be used for configuration, the subordinate devices must each be connected to the network separately. In the SMA 360° app, go to **Setup** > **Network setup** to establish a Wi-Fi connection with the product. Follow the instructions. When requested by the app, scan the QR code of the product. It can be found on the type label of your product. Perform this process for each subordinate device within the system.
4. To start the commissioning wizard, go to **Setup** > **Commissioning**.
5. Follow the SMA 360° app instructions and scan the QR code on the product's cover when prompted by the app to configure it as the System Manager.
6. Select the **Inverter as System Manager** in the device settings, then continue with the app instructions.
   - ☑ The Sunny Home Manager 2.0 or an SMA Energy Meter is detected during commissioning.
   - ☑ The battery is detected during commissioning.
   - ☑ The SMA backup solution is detected during commissioning.
   - ☑ The SMA eCharger is detected during commissioning.

7.4 Commissioning via User Interface

7.4.1 Procedure for commissioning as System Manager

This section describes the procedure of commissioning an inverter that is used in systems as System Manager.

Only 1 device in the system can be used as System Manager at a time (e.g. an inverter as System Manager). All other devices must be configured as a subordinate device and recorded in the System Manager.

It provides an overview of the steps, which must be performed in the prescribed sequence.

A country data set must be set for feed-in operation

To ensure the inverter starts feed-in operation during initial commissioning, a country data set must be set (e.g., via the product commissioning wizard in the SMA 360 app or on the user interface of the product, or via a System Manger).

If no country data set is set, then feed-in operation will be stopped. This state is signaled by the green and red LEDs flashing simultaneously.

The inverter will automatically start feed-in operation only after the inverter configuration is completed.

The country data set must be set correctly.

If you select a country data set which is not valid for your country and purpose, it can cause a disturbance in the PV system and lead to problems with the grid operator. When selecting the country data set, you must always observe the locally applicable standards and directives as well as the properties of the PV system (e.g. PV system size, grid-connection point).

- If you are not sure which standards and directives are valid for your country or purpose, contact the grid operator.

The grid type must be set correctly

If you select the wrong grid type, it can cause a disturbance in the PV system and lead to problems with the grid operator.

Procedure		See
1.	Switch on all devices that are to be subordinate to the System Manager (e.g. inverter, energy meter, battery). All SMA devices that are to be subordinate to the System Manager must be located in the same network.	Manual of the devices
2.	Establish a connection to the user interface of the inverter that is to be configured as System Manager. There are various connection options to choose from for this: • Direct connection via Wi-Fi • Connection via Wi-Fi in the local network • Connection via Ethernet in the local network	Section 8.1, page 67
3.	If required, change the network configuration on the welcome page. The automatic network configuration recommended by SMA Solar Technology AG via DHCP server is activated by default. Only change the network configurations if the default configuration is not suitable for your network.	Commissioning Assistant
4.	Carry out the configuration using the Commissioning Assistant. Select **Inverter as System Manager** in the device function.	Commissioning Assistant
5.	Detecting and adding **subordinate devices**	Section 8.1, page 67
6.	Configure energy management and activate increased self-consumption.	Section 8.1, page 67

Procedure		See
7.	Make further settings if necessary (e.g., configure multifunction relay, configure arc-fault circuit interrupter).	Section 8.1, page 67
8.	To monitor the system in the Sunny Portal and view the data visually, create a user account in the Sunny Portal and create a system in the Sunny Portal or add devices to an existing system.	https://ennexOS.SunnyPortal.com

Also see:

- Switching the Inverter On ⇒ page 61

7.4.2 Procedure for commissioning as a subordinate device

This section describes the procedure of commissioning an inverter that is used in systems with or without System Manager.

In systems with System Manager, only 1 device can be used as System Manager at a time (e.g., SMA Data Manager or an inverter as System Manager). All other devices must be configured as a subordinate device and recorded in the System Manager.

If a Sunny Home Manager is available, all inverters must be configured as subordinate inverters (see Section 7.4.3 "Procedure for commissioning in systems with Sunny Home Manager", page 65).

It provides an overview of the steps, which must be performed in the prescribed sequence.

A country data set must be set for feed-in operation

To ensure the inverter starts feed-in operation during initial commissioning, a country data set must be set (e.g., via the product commissioning wizard in the SMA 360 app or on the user interface of the product, or via a System Manger).

If no country data set is set, then feed-in operation will be stopped. This state is signaled by the green and red LEDs flashing simultaneously.

The inverter will automatically start feed-in operation only after the inverter configuration is completed.

The country data set must be set correctly.

If you select a country data set which is not valid for your country and purpose, it can cause a disturbance in the PV system and lead to problems with the grid operator. When selecting the country data set, you must always observe the locally applicable standards and directives as well as the properties of the PV system (e.g. PV system size, grid-connection point).

- If you are not sure which standards and directives are valid for your country or purpose, contact the grid operator.

The grid type must be set correctly

If you select the wrong grid type, it can cause a disturbance in the PV system and lead to problems with the grid operator.

Procedure		See
1.	Switch on the inverter.	Section 7.2, page 61
2.	Establish a connection to the user interface of the inverter. There are various connection options to choose from for this: • Direct connection via Wi-Fi • Connection via Wi-Fi in the local network • Connection via Ethernet in the local network	Section 8.1, page 67

Procedure		See
3.	If required, change the network configuration on the welcome page. The automatic network configuration recommended by SMA Solar Technology AG via DHCP server is activated by default. Only change the network configurations if the default configuration is not suitable for your network.	Commissioning Assistant
4.	Carry out the configuration using the Commissioning Assistant. When doing so, select **Subordinate device** in the device function.	Commissioning Assistant
5.	Commissioning the inverter to be configured as a System Manager, performing the plant-wide configuration using the commissioning wizard. Register all devices in the system and carry out the system-wide configuration.	Section 7.4.1, page 63

7.4.3 Procedure for commissioning in systems with Sunny Home Manager

This section describes the procedure of commissioning an inverter that is used in systems with Sunny Home Manager. For commissioning, proceed as described in this section and perform the steps in the given order.

If a Sunny Home Manager is available, all inverters must be configured as subordinate inverters.

A country data set must be set for feed-in operation

To ensure the inverter starts feed-in operation during initial commissioning, a country data set must be set (e.g., via the product commissioning wizard in the SMA 360 app or on the user interface of the product, or via a System Manger).

If no country data set is set, then feed-in operation will be stopped. This state is signaled by the green and red LEDs flashing simultaneously.

The inverter will automatically start feed-in operation only after the inverter configuration is completed.

The country data set must be set correctly.

If you select a country data set which is not valid for your country and purpose, it can cause a disturbance in the PV system and lead to problems with the grid operator. When selecting the country data set, you must always observe the locally applicable standards and directives as well as the properties of the PV system (e.g. PV system size, grid-connection point).

- If you are not sure which standards and directives are valid for your country or purpose, contact the grid operator.

The grid type must be set correctly

If you select the wrong grid type, it can cause a disturbance in the PV system and lead to problems with the grid operator.

Procedure		See
1.	Switch on each inverter in the system.	Commissioning the Inverter
2.	Establish a connection to the user interface of the inverter. There are various connection options to choose from for this: • Direct connection via Wi-Fi • Connection via Wi-Fi in the local network • Connection via Ethernet in the local network	Direct connection via Wi-Fi Connection in the local network

Procedure		See
3.	If required, change the network configuration on the welcome page. The automatic network configuration recommended by SMA Solar Technology AG via DHCP server is activated by default. Only change the network configurations if the default configuration is not suitable for your network.	Commissioning Assistant
4.	Carry out the configuration using the Commissioning Assistant. Select **Subordinate inverter** in the device function and set the country data set.	Commissioning Assistant
5.	Put the Sunny Home Manager into operation and register all inverters in the Sunny Home Manager.	Manual of the Sunny Home Manager

8 Operation

8.1 Use of the user interface powered by ennexOS

Products with an user interface powered by ennexOS offer cross-device functions and configuration options. To ensure consistent presentation and maintenance of these contents, general settings are not included in this document.

Descriptions of central functions such as network configuration, user management, software updates or visualization, are included in the higher-level "User manual for products with user interface powered by ennexOS". This manual is available on the respective product page.

QR code:

https://go.sma.de/ennexOS

Device-specific functions and features are described in the present documentation, if available.

9 Disconnecting the Inverter from Voltage Sources

⚠ QUALIFIED PERSON

Prior to performing any work on the inverter, always disconnect it from all voltage sources as described in this section. Always adhere to the prescribed sequence.

⚠ WARNING

Danger to life due to electric shock from destruction of the measuring device due to overvoltage

Overvoltage can damage a measuring device and result in voltage being present in the enclosure of the measuring device. Touching the live enclosure of the measuring device results in death or lethal injuries due to electric shock.

- Only use measuring devices with a measurement ranges designed for the maximum AC and DC voltage of the inverter.
- Only use measuring devices with measurement ranges designed for the maximum DC voltage of the battery.

Procedure:

1. Disconnect the AC miniature circuit breaker from all 3 line conductors and secure against reconnection.
2. Turn the PV load-break switch of the inverter to the **OFF** position.
3. Switch off the battery or the load-break switch of the battery (see documentation of the battery manufacturer).
4. Wait until the LEDs have gone out.

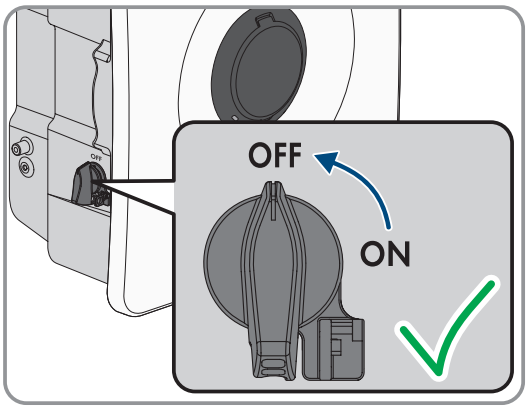

5. Use a current clamp to ensure that no current is present in the DC cables.

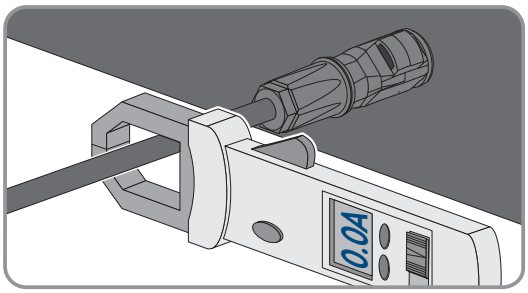

⚠ DANGER

Danger to life due to electric shock when touching exposed DC conductors or DC plug contacts if the DC connectors are damaged or loose

The DC connectors can break or become damaged, become free of the DC cables, or no longer be connected correctly if the DC connectors are released and disconnected incorrectly. This can result in the DC conductors or DC plug contacts being exposed. Touching live DC conductors or DC plug connectors will result in death or serious injury due to electric shock.

- Wear insulated gloves and use insulated tools when working on the DC connectors.
- Ensure that the DC connectors are in perfect condition and that none of the DC conductors or DC plug contacts are exposed.
- Carefully release and remove the DC connectors as described in the following.

6. Release and remove the PV connectors. To do so, insert a flat-blade screwdriver or an angled screwdriver (blade width: 3.5 mm) into one of the side slots and pull the PV connectors out. When doing so, do not lever the PV connectors out, but insert the tool into one of the side slots only to release the locking mechanism, and do not pull on the cable.

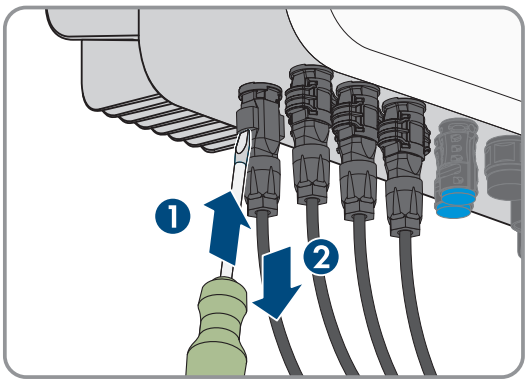

7. Ensure that no voltage is present between the positive terminal and negative terminal at the PV inputs using a suitable measuring device.

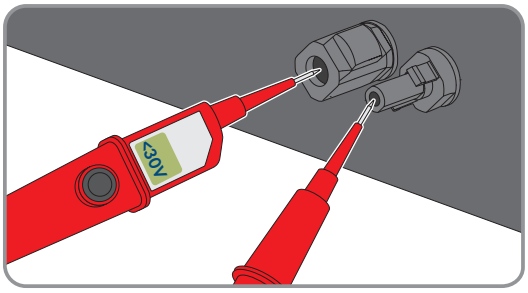

8. Ensure that no voltage is present between the positive terminal and ground as well as between the negative terminal and ground on the PV inputs using a suitable measuring device.

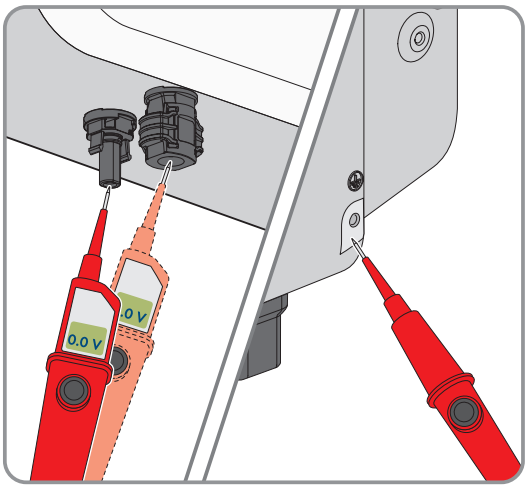

9. Ensure that no electric currents are present at the battery inputs using a suitable measuring device.

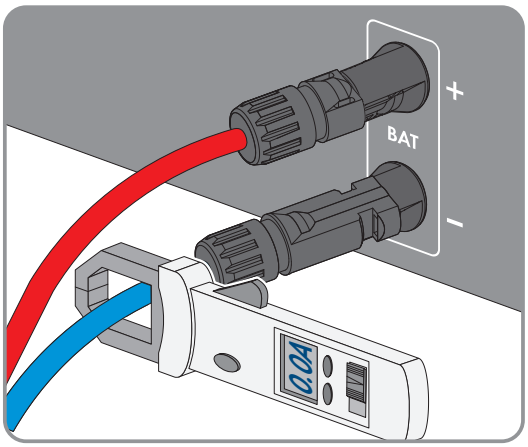

10. Insert an MC4 wrench (not included in the scope of delivery) into the notch of the DC connectors of the battery connection cables and pull slightly to remove the DC connectors.

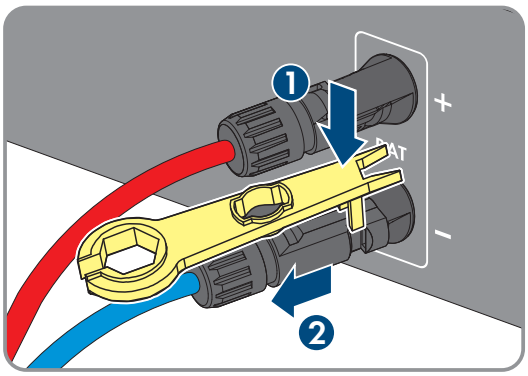

11. Remove the AC connector for the connection of the backup loads.

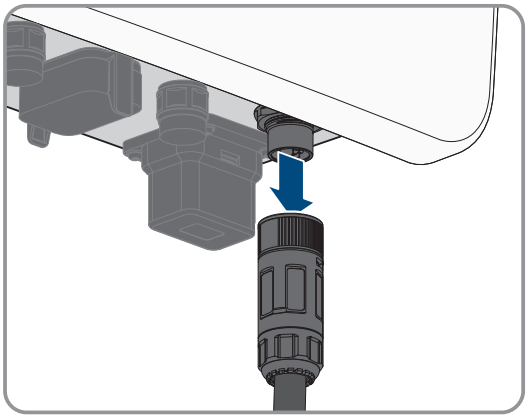

12. Attach the tool for unlocking the AC connector.

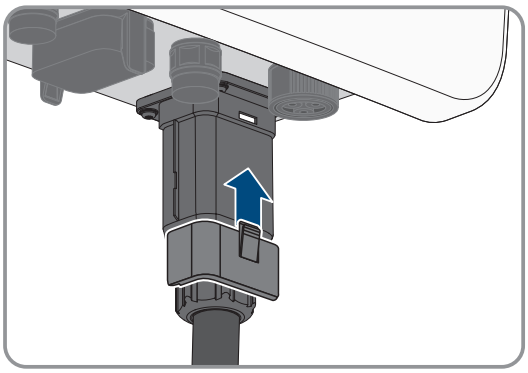

13. Press the release button on the AC connector and remove the connector for the connection of the utility grid.

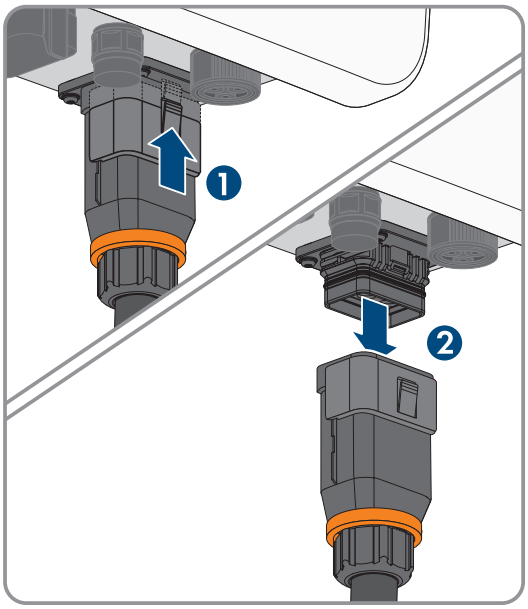

10 Maintenance

10.1 Cleaning

The product must be cleaned regularly to ensure that the product is free of dust, leaves and other dirt.

NOTICE

Damage to the product due to cleaning agents

The use of cleaning agents may cause damage to the product and its components.

- Clean the product and all its components only with a cloth moistened with clear water.

NOTICE

Yield reduction due to dirty cooling fins

The power output of the inverter is reduced if the cooling fins are very dirty.

- Clean the cooling fins of the inverter.

11 Troubleshooting

11.1 Event messages

11.1.1 Event 101

⚠ QUALIFIED PERSON

Event message:

- **Grid incident**

Explanation:

The grid voltage or grid impedance at the connection point of the inverter is too high. The inverter has disconnected from the utility grid.

Corrective measures:

- Check whether the grid voltage at the connection point of the inverter is permanently in the permissible range.

  If the grid voltage is outside the permissible range due to local grid conditions, contact the grid operator. The grid operator must agree with an adjustment of the voltage at the feed-in point or with a change of the monitored operating limits.

  If the grid voltage is permanently within the permissible range and this message is still displayed, contact the Service.

11.1.2 Event 102

⚠ QUALIFIED PERSON

Event message:

- **Grid incident**

Explanation:

The grid voltage or grid impedance at the connection point of the inverter is too high. The inverter has disconnected from the utility grid.

Corrective measures:

- Check whether the grid voltage at the connection point of the inverter is permanently in the permissible range.

  If the grid voltage is outside the permissible range due to local grid conditions, contact the grid operator. The grid operator must agree with an adjustment of the voltage at the feed-in point or with a change of the monitored operating limits.

  If the grid voltage is permanently within the permissible range and this message is still displayed, contact the Service.

11.1.3 Event 103

⚠ QUALIFIED PERSON

Event message:

- **Grid incident**

Explanation:

The grid voltage or grid impedance at the connection point of the inverter is too high. The inverter has disconnected from the utility grid.

Corrective measures:

- Check whether the grid voltage at the connection point of the inverter is permanently in the permissible range.

  If the grid voltage is outside the permissible range due to local grid conditions, contact the grid operator. The grid operator must agree with an adjustment of the voltage at the feed-in point or with a change of the monitored operating limits.

  If the grid voltage is permanently within the permissible range and this message is still displayed, contact the Service.

11.1.4 Event 105

⚠ QUALIFIED PERSON

Event message:

- **Grid incident**

Explanation:

The grid voltage or grid impedance at the connection point of the inverter is too high. The inverter has disconnected from the utility grid.

Corrective measures:

- Check whether the grid voltage at the connection point of the inverter is permanently in the permissible range.

  If the grid voltage is outside the permissible range due to local grid conditions, contact the grid operator. The grid operator must agree with an adjustment of the voltage at the feed-in point or with a change of the monitored operating limits.

  If the grid voltage is permanently within the permissible range and this message is still displayed, contact the Service.

11.1.5 Event 202

⚠ QUALIFIED PERSON

Event message:

- **Grid incident**

Explanation:

The utility grid has been disconnected, the AC cable is damaged or the grid voltage at the connection point of the inverter is too low. The inverter has disconnected from the utility grid.

Corrective measures:

- Ensure that the miniature circuit breaker is switched on.
- Ensure that the AC cable is not damaged and that it is connected correctly.
- Ensure that the country data set has been configured correctly.
- Check whether the grid voltage at the connection point of the inverter is permanently in the permissible range.

  If the grid voltage is outside the permissible range due to local grid conditions, contact the grid operator. The grid operator must agree with an adjustment of the voltage at the feed-in point or with a change of the monitored operating limits.

  If the grid voltage is permanently within the permissible range and this message is still displayed, contact the Service.

11.1.6 Event 203

⚠ QUALIFIED PERSON

Event message:

- **Grid incident**

Explanation:

The utility grid has been disconnected, the AC cable is damaged or the grid voltage at the connection point of the inverter is too low. The inverter has disconnected from the utility grid.

Corrective measures:

- Ensure that the miniature circuit breaker is switched on.
- Ensure that the AC cable is not damaged and that it is connected correctly.
- Ensure that the country data set has been configured correctly.
- Check whether the grid voltage at the connection point of the inverter is permanently in the permissible range.

  If the grid voltage is outside the permissible range due to local grid conditions, contact the grid operator. The grid operator must agree with an adjustment of the voltage at the feed-in point or with a change of the monitored operating limits.

  If the grid voltage is permanently within the permissible range and this message is still displayed, contact the Service.

11.1.7 Event 206

⚠ QUALIFIED PERSON

Event message:

- **Grid incident**

Explanation:

The utility grid has been disconnected, the AC cable is damaged or the grid voltage at the connection point of the inverter is too low. The inverter has disconnected from the utility grid.

Corrective measures:

- Ensure that the miniature circuit breaker is switched on.
- Ensure that the AC cable is not damaged and that it is connected correctly.
- Ensure that the country data set has been configured correctly.
- Check whether the grid voltage at the connection point of the inverter is permanently in the permissible range.

  If the grid voltage is outside the permissible range due to local grid conditions, contact the grid operator. The grid operator must agree with an adjustment of the voltage at the feed-in point or with a change of the monitored operating limits.

  If the grid voltage is permanently within the permissible range and this message is still displayed, contact the Service.

11.1.8 Event 301

⚠ QUALIFIED PERSON

Event message:

- **Grid incident**

Explanation:

The ten-minute average value of the grid voltage is no longer within the permissible range. The grid voltage or grid impedance at the connection point is too high. The inverter disconnects from the utility grid to maintain power quality.

Corrective measures:

- During the feed-in operation, check whether the grid voltage at the connection point of the inverter is permanently in the permissible range.

  If the grid voltage is outside the permissible range due to local grid conditions, contact the grid operator. The grid operator must agree with an adjustment of the voltage at the feed-in point or with a change of the monitored operating limits.

  If the grid voltage is permanently within the permissible range and this message is still displayed, contact the Service.

11.1.9 Event 302

⚠ QUALIFIED PERSON

Event message:

- **Active power limited AC voltage**

Explanation:

The inverter has reduced its power due to a too-high grid voltage to ensure grid stability.

Corrective measures:

- If possible, check the grid voltage and observe how often fluctuations occur. If fluctuations occur frequently and this message is displayed often, contact the grid operator and request approval to change the operating parameters of the inverter. If the grid operator gives approval, discuss any changes to the operating parameters with the Service.

11.1.10 Event 401

⚠ QUALIFIED PERSON

Event message:

- **Grid incident**

Explanation:

The inverter has disconnected from the utility grid. A stand-alone grid or a very large change in the grid frequency was detected.

Corrective measures:

- Make sure there is no power outage or work being done on the utility grid and contact a grid operator if necessary.
- Check the grid connection for significant short-term frequency fluctuations.

11.1.11 Event 404

⚠ QUALIFIED PERSON

Event message:

- **Grid incident**

Explanation:

The inverter has disconnected from the utility grid. A stand-alone grid or a very large change in the grid frequency was detected.

Corrective measures:

- Make sure there is no power outage or work being done on the utility grid and contact a grid operator if necessary.
- Check the grid connection for significant short-term frequency fluctuations.

11.1.12 Event 501

⚠ QUALIFIED PERSON

Event message:

- **Grid incident**

Explanation:

The grid frequency is not within the permissible range. The inverter has disconnected from the utility grid.

Corrective measures:

- If possible, check the grid frequency and observe how often fluctuations occur.

  If fluctuations occur frequently and this message is displayed often, contact the grid operator and request approval to change the operating parameters of the inverter.

  If the grid operator gives approval, discuss any changes to the operating parameters with the Service.

11.1.13 Event 507

⚠ QUALIFIED PERSON

Event message:

- **Active power limit AC frequency**

Explanation:

The inverter has reduced its power due to a too-high grid frequency to ensure grid stability.

Corrective measures:

- If possible, check the grid frequency and observe how often fluctuations occur. If fluctuations occur frequently and this message is displayed often, contact the grid operator and request approval to change the operating parameters of the inverter. If the grid operator gives approval, discuss any changes to the operating parameters with the Service.

11.1.14 Event 601

⚠ QUALIFIED PERSON

Event message:

- **Grid incident**

Explanation:

The inverter has detected an excessively high proportion of direct current in the grid current.

Corrective measures:

- Check the grid connection for direct current.

- If this message is displayed frequently, contact the grid operator and check whether the monitoring threshold on the inverter can be raised.

11.1.15 Event 701

⚠ QUALIFIED PERSON

Event message:

- **Frequency not permitted**
- **Check parameter**

Explanation:

The grid frequency is not within the permissible range. The inverter has disconnected from the utility grid.

Corrective measures:

- Check the AC wiring from the inverter to the feed-in meter.
- If possible, check the grid frequency and observe how often fluctuations occur.

  If fluctuations occur frequently and this message is displayed often, contact the grid operator and request approval to change the operating parameters of the inverter.

  If the grid operator gives approval, discuss any changes to the operating parameters with the Service.

11.1.16 Event 901

⚠ QUALIFIED PERSON

Event message:

- **PE connection missing**
- **Check connection**

Explanation:

The grounding conductor is not correctly connected.

Corrective measures:

- Ensure that the grounding conductor is correctly connected.

11.1.17 Event 1001

⚠ QUALIFIED PERSON

Event message:

- **L / N swapped**

Explanation:

Incorrect installation of the L / N connection.

Corrective measures:

- Check the AC wiring from the inverter to the feed-in meter.
- Check the AC voltages on the inverter connection.
- If this message is still displayed, contact the Service.

11.1.18 Event 1101

⚠ QUALIFIED PERSON

Event message:

- **Installation error**
- **Check connection**

Explanation:

A second line conductor is connected to N.

Corrective measures:

- Connect the neutral conductor to N.

11.1.19 Event 1302

⚠ QUALIFIED PERSON

Event message:

- **Waiting for grid voltage**
- **Grid connection installation failure**
- **Check grid and fuses**

Explanation:

Either L or N is not connected, or the utility grid has failed.

Corrective measures:

- Ensure that there is no utility grid failure.
- Ensure that the line conductors are connected.
- Ensure that the miniature circuit breaker is switched on.
- Ensure that the AC cable is not damaged and that it is connected correctly.

11.1.20 Event 1501

⚠ QUALIFIED PERSON

Event message:

- **Reconnection fault grid**

Explanation:

The changed country standard or the value of a parameter you have set does not correspond to the local requirements. The inverter cannot connect to the utility grid.

Corrective measures:

- Ensure that the country data set has been configured correctly. To do this, select the parameter **Set country standard** and check the value.

11.1.21 Event 3302

⚠ QUALIFIED PERSON

Event message:

- Unstable operation

Explanation:

There is not enough power at the DC input of the inverter for stable operation. The inverter cannot connect to the utility grid.

Corrective measures:

- Ensure that the PV module is dimensioned correctly.
- Ensure that the PV module is not covered by snow or otherwise shaded.
- Ensure that the PV module is free of defects.
- Ensure that the battery is fault-free.

11.1.22 Event 3303

⚠ QUALIFIED PERSON

Event message:

- Unstable operation

Explanation:

There is not enough power at the DC input of the inverter for stable operation. The inverter cannot connect to the utility grid.

Corrective measures:

- Ensure that the PV module is dimensioned correctly.
- Ensure that the PV module is not covered by snow or otherwise shaded.
- Ensure that the PV module is free of defects.
- Ensure that the battery is fault-free.

11.1.23 Event 3401

⚠ QUALIFIED PERSON

Event message:

- DC overvoltage
- Disconnecting generator

Explanation:

Overvoltage at the DC input. This can destroy the inverter.

Corrective measures:

- **Immediately** disconnect the inverter from all voltage sources.
- Check whether the DC voltage is below the maximum input voltage of the inverter. If the DC voltage is below the maximum input voltage of the inverter, reconnect the DC cables to the inverter.
- If the DC voltage is above the maximum DC voltage of the inverter, ensure that the correct battery has been selected.
- If the DC voltage exceeds the maximum input voltage of the inverter, ensure that the PV array has been correctly rated or contact the installer of the PV array.
- If this message is repeated frequently, contact the Service.

11.1.24 Event 3402

⚠ QUALIFIED PERSON

Event message:

- DC overvoltage
- Disconnecting generator

Explanation:

Overvoltage at the DC input. This can destroy the inverter.

Corrective measures:

- **Immediately** disconnect the inverter from all voltage sources.
- Check whether the DC voltage is below the maximum input voltage of the inverter. If the DC voltage is below the maximum input voltage of the inverter, reconnect the DC cables to the inverter.
- If the DC voltage is above the maximum DC voltage of the inverter, ensure that the correct battery has been selected.
- If the DC voltage exceeds the maximum input voltage of the inverter, ensure that the PV array has been correctly rated or contact the installer of the PV array.
- If this message is repeated frequently, contact the Service.

11.1.25 Event 3407

⚠ QUALIFIED PERSON

Event message:

- **DC overvoltage**
- **Disconnect generator**

Explanation:

Overvoltage at the DC input. This can destroy the inverter.

This message is signalized additionally by rapid flashing of the LEDs.

Corrective measures:

- **Immediately** disconnect the inverter from voltage sources and secure it against being switched on again.
- Check whether the DC voltage is below the maximum input voltage of the inverter. If the DC voltage is below the maximum input voltage of the inverter, reconnect the DC cables to the inverter.
- If the DC voltage exceeds the maximum input voltage of the inverter, ensure that the PV array has been correctly rated or contact the installer of the PV array.
- If this message is repeated frequently, contact the Service.

11.1.26 Event 3410

⚠ QUALIFIED PERSON

Event message:

- **DC overvoltage**
- **Disconnect generator**

Explanation:

Overvoltage at the DC input. This can destroy the inverter.

This message is signalized additionally by rapid flashing of the LEDs.

Corrective measures:

- **Immediately** disconnect the inverter from voltage sources and secure it against being switched on again.
- Check whether the DC voltage is below the maximum input voltage of the inverter. If the DC voltage is below the maximum input voltage of the inverter, reconnect the DC cables to the inverter.
- If the DC voltage exceeds the maximum input voltage of the inverter, ensure that the PV array has been correctly rated or contact the installer of the PV array.
- If this message is repeated frequently, contact the Service.

11.1.27 Event 3411

⚠ QUALIFIED PERSON

Event message:

- **DC overvoltage**
- **Disconnect generator**

Explanation:

Overvoltage at the DC input. This can destroy the inverter.

This message is signalized additionally by rapid flashing of the LEDs.

Corrective measures:

- **Immediately** disconnect the inverter from voltage sources and secure it against being switched on again.
- Check whether the DC voltage is below the maximum input voltage of the inverter. If the DC voltage is below the maximum input voltage of the inverter, reconnect the DC cables to the inverter.
- If the DC voltage exceeds the maximum input voltage of the inverter, ensure that the PV array has been correctly rated or contact the installer of the PV array.
- If this message is repeated frequently, contact the Service.

11.1.28 Event 3501

⚠ QUALIFIED PERSON

Event message:

- Ground fault
- Check generator

Explanation:

The inverter has detected a ground fault on the DC side.

Corrective measures:

- Check the PV system for ground faults.
- Check the battery and DC cabling for ground faults.
- Perform a visual check to ensure that the DC cabling is free of faults.

11.1.29 Event 3523

Event message:

- Start of cyclic insulation test

Explanation:

During the cyclic insulation test, it is tested whether the electric strength of the battery and PV system is within the safe range. The inverter will be restarted once during an insulation test.

11.1.30 Event 3601

⚠ QUALIFIED PERSON

Event message:

- High leakage current
- Check generator

Explanation:

The leakage current of the inverter and the PV modules or the battery is too high. There is a ground fault, a residual current or a malfunction.

The inverter interrupts feed-in operation immediately after exceeding a threshold. When the fault is eliminated, the inverter automatically reconnects to the utility grid.

Corrective measures:

- Check the PV system for ground faults.
- Check the battery and DC cabling for ground faults.

11.1.31 Event 3701

⚠ QUALIFIED PERSON

Event message:

- Residual current too high
- Check generator

Explanation:

The inverter detected a residual current due to brief grounding of the PV modules, the battery, or the DC wiring.

Corrective measures:

- Check the PV system for ground faults.
- Check the battery and DC cabling for ground faults.

11.1.32 Event 3901

⚠ QUALIFIED PERSON

Event message:

- Waiting for DC start conditions
- Start conditions not met

Explanation:

The feed-in conditions for the utility grid are not yet fulfilled.

Corrective measures:

- Check whether a new firmware version is available for the inverter and the battery. If a newer version is available, perform the firmware update.
- Ensure that the PV module is not covered by snow or otherwise shaded.

- Wait for higher irradiation.
- If this message is displayed frequently in the morning, increase the voltage limit for starting grid feed-in. Change the parameter **Critical voltage to start feed-in**.
- If this message is displayed frequently with medium irradiation, ensure that the PV module is correctly rated.

11.1.33 Event 3902

⚠ QUALIFIED PERSON

Event message:

- Waiting for DC start conditions
- Start conditions not met

Explanation:

The feed-in conditions for the utility grid are not yet fulfilled.

Corrective measures:

- Check whether a new firmware version is available for the inverter and the battery. If a newer version is available, perform the firmware update.
- Ensure that the PV module is not covered by snow or otherwise shaded.
- Wait for higher irradiation.
- If this message is displayed frequently in the morning, increase the voltage limit for starting grid feed-in. Change the parameter **Critical voltage to start feed-in**.
- If this message is displayed frequently with medium irradiation, ensure that the PV module is correctly rated.

11.1.34 Event 4013

⚠ QUALIFIED PERSON

Event message:

- Reverse currents or input X polarity reversed
- Check generator

Explanation:

The displayed input is in reverse polarity or reverse current has been detected in the input.

Corrective measures:

- Check the correct polarity of the connected PV modules.
- Ensure correct design and circuitry of the PV array.
- If solar irradiation is sufficient, check whether the same voltage is present at the DC inputs.
- Ensure that no PV module is defective.

11.1.35 Event 4014

⚠ QUALIFIED PERSON

Event message:

- Reverse currents or input X polarity reversed
- Check generator

Explanation:

The displayed input is in reverse polarity or reverse current has been detected in the input.

Corrective measures:

- Check the correct polarity of the connected PV modules.
- Ensure correct design and circuitry of the PV array.
- If solar irradiation is sufficient, check whether the same voltage is present at the DC inputs.
- Ensure that no PV module is defective.

11.1.36 Event 4015

⚠ QUALIFIED PERSON

Event message:

- Reverse currents or input X polarity reversed
- Check generator

Explanation:

The displayed input is in reverse polarity or reverse current has been detected in the input.

Corrective measures:

- Check the correct polarity of the connected PV modules.
- Ensure correct design and circuitry of the PV array.
- If solar irradiation is sufficient, check whether the same voltage is present at the DC inputs.
- Ensure that no PV module is defective.

11.1.37 Event 4016

⚠ QUALIFIED PERSON

Event message:

- Reverse currents or input X polarity reversed
- Check generator

Explanation:

The displayed input is in reverse polarity or reverse current has been detected in the input.

Corrective measures:

- Check the correct polarity of the connected PV modules.
- Ensure correct design and circuitry of the PV array.
- If solar irradiation is sufficient, check whether the same voltage is present at the DC inputs.
- Ensure that no PV module is defective.

11.1.38 Event 4017

⚠ QUALIFIED PERSON

Event message:

- Reverse currents or input X polarity reversed
- Check generator

Explanation:

The displayed input is in reverse polarity or reverse current has been detected in the input.

Corrective measures:

- Check the correct polarity of the connected PV modules.
- Ensure correct design and circuitry of the PV array.
- If solar irradiation is sufficient, check whether the same voltage is present at the DC inputs.
- Ensure that no PV module is defective.

11.1.39 Event 4301

⚠ QUALIFIED PERSON

Event message:

- **Serial el.arc in String |s0| detected by AFCI mod.**

Explanation:

The inverter has detected an electric arc in the displayed string. If "String N/A" is displayed, the string could not be uniquely assigned.

Corrective measures:

- Disconnect the inverter from voltage sources and secure it against being switched on again.
- Check the PV modules and the cabling in the affected string or, if the string was not displayed, in all strings for damage.
- Ensure that the DC connection in the inverter is correct.
- Repair or replace defective PV modules, DC cables or the DC connection in the inverter.
- Start manual restart (if necessary).

11.1.40 Event 6001-6499

⚠ QUALIFIED PERSON

Event message:

- **Self-diagnosis**
- **Interference device**

Explanation:

The cause must be determined by the Service.

Corrective measures:

- Contact Service.

11.1.41 Event 6501

⚠ QUALIFIED PERSON

Event message:

- **Self-diagnosis**
- **Overtemperature**

Explanation:

The inverter has switched off due to excessive temperature.

Corrective measures:

- Clean the cooling fins on the rear of the enclosure and the air ducts on the top using a soft brush.
- Ensure that the inverter has sufficient ventilation.
- Ensure the maximum ambient temperature is not exceeded.

11.1.42 Event 6502

⚠ QUALIFIED PERSON

Event message:

- **Self-diagnosis**
- **Overtemperature**

Explanation:

The inverter has switched off due to excessive temperature.

Corrective measures:

- Clean the cooling fins on the rear of the enclosure and the air ducts on the top using a soft brush.
- Ensure that the inverter has sufficient ventilation.
- Ensure that the maximum permissible ambient temperature is complied with.

11.1.43 Event 6509

⚠ QUALIFIED PERSON

Event message:

- **Self-diagnosis**
- **Overtemperature**

Explanation:

The inverter has switched off due to excessive temperature.

Corrective measures:

- Clean the cooling fins on the rear of the enclosure and the air ducts on the top using a soft brush.
- Ensure that the inverter has sufficient ventilation.
- Ensure the maximum ambient temperature is not exceeded.

11.1.44 Event 6511

⚠ QUALIFIED PERSON

Event message:

- **Self-diagnosis**
- **Overtemperature**

Explanation:

An overtemperature has been detected in the choke area.

Corrective measures:

- Clean the cooling fins on the rear of the enclosure and the air ducts on the top using a soft brush.
- Ensure that the inverter has sufficient ventilation.

11.1.45 Event 6512

Event message:

- **Minimum operating temperature not reached**

Explanation:

The inverter will only recommence grid feed-in once the temperature has reached at least −25°C.

11.1.46 Event 6602

⚠ QUALIFIED PERSON

Event message:

- **Overvoltage grid (SW)**

Explanation:

The effective value of the grid voltage is above the permitted voltage threshold values for a specified period of time (AF limit).

Corrective measures:

- Check the grid voltage and connection on the inverter.

  If the grid voltage lies outside the permissible range due to local grid conditions, ask your grid operator if the voltage can be adjusted at the feed-in point or if it would be acceptable to change the monitored operating limits.

11.1.47 Event 6606

⚠ QUALIFIED PERSON

Event message:

- Self-diagnosis
- Device fault

Explanation:

The cause must be determined by the Service.

Corrective measures:

- Contact Service.

11.1.48 Event 6633

⚠ QUALIFIED PERSON

Event message:

- Self-diagnosis
- Device fault

Explanation:

The cause must be determined by the Service.

Corrective measures:

- Contact the Service.

11.1.49 Event 6801

⚠ QUALIFIED PERSON

Event message:

- **Self-diagnosis**
- **Input A defective**

Explanation:

The inverter has detected an error at DC input A.

Corrective measures:

- Check whether a string is connected to input A.
- Contact Service.

11.1.50 Event 6901

⚠ QUALIFIED PERSON

Event message:

- **Self-diagnosis**
- **Input B defective**

Explanation:

The inverter has detected an error at DC input B.

Corrective measures:

- Check whether a string is connected to input B.
- Contact Service.

11.1.51 Event 7001

⚠ QUALIFIED PERSON

Event message:

- **Fault sensor interior temperature**

Explanation:

A temperature sensor in the inverter is defective and the inverter interrupts the feed-in operation. The cause must be determined by the Service.

Corrective measures:

- Contact Service.

11.1.52 Event 7002

⚠ QUALIFIED PERSON

Event message:

- **Fault sensor interior temperature**

Explanation:

A temperature sensor in the inverter is defective and the inverter interrupts the feed-in operation. The cause must be determined by the Service.

Corrective measures:

- Contact Service.

11.1.53 Event 7014

⚠ QUALIFIED PERSON

Event message:

- **Fault boost converter temperature sensor**

Explanation:

Fan is always on.

Corrective measures:

- Contact Service.

11.1.54 Event 7015

⚠ QUALIFIED PERSON

Event message:

- **Fault sensor interior temperature**

Explanation:

A temperature sensor in the inverter is defective and the inverter interrupts the feed-in operation. The cause must be determined by the Service.

Corrective measures:

- Contact Service.

11.1.55 Event 7702

⚠ QUALIFIED PERSON

Event message:

- **Self-diagnosis**
- **Interference device**

Explanation:

The cause must be determined by the Service.

Corrective measures:

- Contact Service.

11.1.56 Event 7703

⚠ QUALIFIED PERSON

Event message:

- **Self-diagnosis**

- **Interference device**

Explanation:

The cause must be determined by the Service.

Corrective measures:

- Contact Service.

11.1.57 Event 8003

⚠ QUALIFIED PERSON

Event message:

- **Temperature derating**

Explanation:

The inverter has reduced its power output for more than 10 minutes due to excessive temperature.

Corrective measures:

- Clean the cooling fins on the rear of the enclosure and the air ducts on the top using a soft brush.
- Ensure that the inverter has sufficient ventilation.
- Ensure the maximum ambient temperature is not exceeded.
- Ensure that the inverter is not exposed to direct solar irradiation.

11.1.58 Event 8104

⚠ QUALIFIED PERSON

Event message:

- Communication impaired

Explanation:

The cause must be determined by the Service.

Corrective measures:

- Contact Service.

11.1.59 Event 8205

⚠ QUALIFIED PERSON

Event message:

- **AFCI self-test successful**

Explanation:

The self-test of SMA ArcFix has been completed successfully.

11.1.60 Event 8503

⚠ QUALIFIED PERSON

Event message:

- **Self-diagnosis**
- **Input C defective**

Explanation:

Polarity error on the inverter.

Corrective measures:

- Check whether a string is connected to input C. If a string that once was connected is not used anymore, the string-failure detection must be reset.
- Contact Service.

11.1.61 Event 8708

⚠ QUALIFIED PERSON

Event message:

- **Timeout in communication for active power limitation**

Explanation:

Communication to the system control absent. Depending on the fallback setting, either the last received values will be retained or the active power will be limited to the set percentage value of the inverter nominal power.

Corrective measures:

- Ensure that the connection to the System Manager is intact and that no cables are damaged or that no plugs have been pulled.

11.1.62 Event 8709

⚠ QUALIFIED PERSON

Event message:

- **Timeout in communication for reactive power spec.**

Explanation:

Communication to the system control absent. Depending on the fallback setting, either the last received values will be retained or the active power will be limited to the set percentage value of the inverter nominal power.

Corrective measures:

- Ensure that the connection to the System Manager is intact and that no cables are damaged or that no plugs have been pulled.

11.1.63 Event 8710

⚠ QUALIFIED PERSON

Event number:

- **Timeout in communication for cos-Phi spec.**

Explanation:

Communication to the system control absent.

Corrective measures:

- Ensure that the connection to the System Manager is intact and that no cables are damaged or that no plugs have been pulled.

11.1.64 Event 9007

⚠ QUALIFIED PERSON

Event message:

- **Abort self-test**

Explanation:

The self-test was terminated.

Corrective measures:

- Ensure that the AC connection is correct.
- Ensure that the country data set has been entered correctly.
- Restart the self-test.

11.1.65 Event 9037

⚠ QUALIFIED PERSON

Event message:

- Generator not connected

Explanation:

The PV module switches did not connect the PV module.

Corrective measures:

- Check the functionality of the SunSpec-compliant PV module switches.

11.1.66 Event 9101

⚠ QUALIFIED PERSON

Event message:

- AC voltage calibration failed.

Explanation:

An error has occurred during calibration. The cause must be determined by the Service.

Corrective measures:

- Contact Service.

11.1.67 Event 9102

⚠ QUALIFIED PERSON

Event message:

- Permanent operation inhibition

Explanation:

The charging and discharging operation of the inverter is permanently interrupted.

Corrective measures:

- Set the parameter **Operating mode** to **Start**.

11.1.68 Event 9107

⚠ QUALIFIED PERSON

Event message:

- **Self-diagnosis**
- **Interference device**

Explanation:

The cause must be determined by the Service.

Corrective measures:

- Contact Service.

11.1.69 Event 9202

⚠ QUALIFIED PERSON

Event message:

- **AC overvoltage in backup operation**

Explanation:

The cause must be determined by the Service.

Corrective measures:

- Contact the Service.

11.1.70 Event 9203

⚠ QUALIFIED PERSON

Event message:

- **Short circuit in backup operation**

Explanation:

A short circuit occurred at the socket for manual secure power supply operation.

Corrective measures:

- Ensure that the socket is correctly wired.
- Ensure that the load connected to the socket is working correctly.
- Unplug the load from the socket and switch on secure power supply operation.

11.1.71 Event 9308

⚠ QUALIFIED PERSON

Event message:

- Battery system communication error

Explanation:

Event 9308 indicates a communication error in the battery system.

Corrective measures:

- Ensure that the battery system is switched on correctly.

- Check that the battery communication cable is connected correctly and that the CAN bus is wired correctly. Make sure that:
  - correct connection of the Enable and GND lines
  - Cable category is at least Cat 5e, twisted pair
  - maximum cable length: 10 m
  - Sufficient stripping of 12 mm. If multi-core stranded wires are used, use bootlace ferrules (12 mm).
- Check the grounding of the inverter and the battery system.
- Perform communication test via the user interface.
- Check the condition of the battery using the battery manufacturer's documentation and contact them if necessary.

11.1.72 Event 9342

⚠ QUALIFIED PERSON

Event message:

- **DC connection, polarity reversed**
- **Check connection**

Explanation:

The DC conductors are not assigned to the correct inputs in the inverter.

Corrective measures:

- Ensure that all DC conductors for PV and battery are connected to the correct terminals.
- If, in addition, event 9102 is displayed, the charging and discharging operation of the inverter is permanently interrupted even after connection to the proper terminals. In this case, set parameter **Operating mode** to **Start**.

11.1.73 Event 9345

⚠ QUALIFIED PERSON

Event message:

- **Battery charge too low for start procedure**

Explanation:

The state of charge of the battery is too low for the start process. The inverter can no longer charge the battery by itself. The battery must be charged immediately by a qualified person.

Corrective measures:

- If a battery from SMA Solar Technology AG is used, contact Service and instruct them to manually charge the battery.
- If a battery from another manufacturer is used, contact the manufacturer.

11.1.74 Event 9350

⚠ QUALIFIED PERSON

Event message:

- Timeout for battery status change

Explanation:

A requested status change of the battery did not occur within the specified time.

Corrective measures:

- Ensure that the battery is switched on.
- Ensure that the battery is fault-free.
- Ensure that the battery communication cable is correctly assembled and connected.

11.1.75 Event 9394

Event message:

- Deep discharge protection activated

Explanation:

The battery management system has activated the deep discharge protection. For grid-connected systems, this message is an event message, not a warning message.

11.1.76 Event 9395

Event message:

- Battery separated externally

Explanation:

The DC power connection to the battery was disconnected.

Corrective measures:

- Contact Service.

11.1.77 Event 29252

Event message:

- **Backup operation not possible**

Explanation:

SPS mode is not started because the connection to the utility grid is still active.

Corrective measures:

- Verify that the utility grid is down or that the AC power supply to the inverter has been disconnected using the AC circuit breaker.
- Ensure that the parameter settings for backup operation are properly configured.

11.1.78 Event 29254

Event message:

- **Input power too low for backup operation**

Explanation:

The battery and PV power are not sufficient to supply the SPS load.

Corrective measures:

- Ensure that sufficient PV power is available.
- Ensure that the battery is charged correctly.
- Reduce the SPS load.

11.2 Calculating the insulation resistance

The expected total resistance of the PV system or of an individual string can be calculated using the following formula:

$$\frac{1}{R_{total}} = \frac{1}{R_1} + \frac{1}{R_2} + \frac{1}{R_3} + \ldots$$

The exact insulation resistance of a PV module can be obtained from the module manufacturer or the datasheet.

For the resistance of a PV module an average value can be assumed: for thin-film PV modules approximately 40 MOhm and for polycrystalline and monocrystalline PV modules approximately 50 MOhm per PV module.

Also see:

- Checking the PV System for Ground Faults ⇒ page 96

11.3 Checking the PV System for Ground Faults

⚠ QUALIFIED PERSON

If the red LED is glowing and the event number 3501, 3601 or 3701 is being displayed in the **Results** menu on the inverter user interface, there may be a ground fault present. The electrical insulation from the PV system to ground is defective or insufficient.

⚠ DANGER

Danger to life due to electric shock when touching live system components in case of a ground fault

If a ground fault occurs, parts of the system may still be live. Touching live parts and cables results in death or lethal injuries due to electric shock.

- Disconnect the product and battery from voltage sources and make sure it cannot be reconnected before working on the device.
- Only touch the cables of the PV modules on their insulation.
- Do not touch any parts of the substructure or frame of the PV array.
- Do not connect PV strings with ground faults to the inverter.
- Ensure that no voltage is present and wait 5 minutes before touching any parts of the PV system or the product.

⚠ WARNING

Danger to life due to electric shock from destruction of the measuring device due to overvoltage

Overvoltage can damage a measuring device and result in voltage being present in the enclosure of the measuring device. Touching the live enclosure of the measuring device results in death or lethal injuries due to electric shock.

- Only use measuring devices with a measurement ranges designed for the maximum AC and DC voltage of the inverter.
- Only use measuring devices with measurement ranges designed for the maximum DC voltage of the battery.

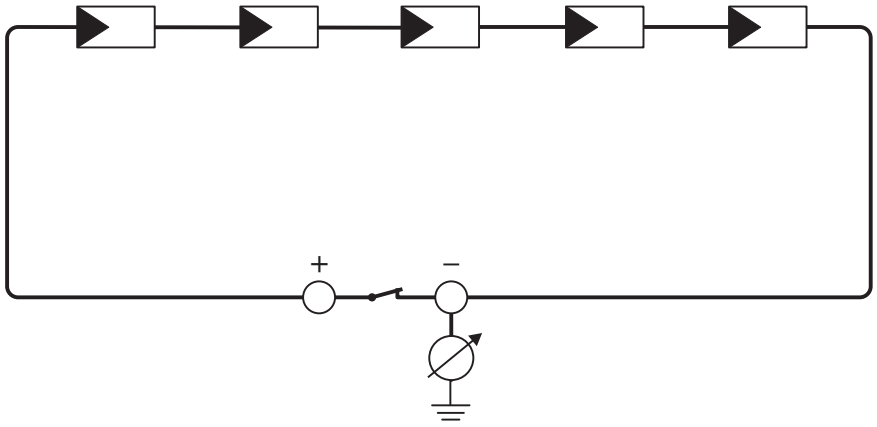

Figure 14: Schematic diagram of the measurement

Required equipment:

☐ Suitable device for safe disconnection and short-circuiting

☐ Measuring device for insulation resistance

Procedure:

1. Calculate the expected insulation resistance per string.
2. Install the short circuit device.
3. Connect the measuring device for insulation resistance.
4. Short-circuit the first string.
5. Set the test voltage. The test voltage should be as close as possible to the maximum system voltage of the PV modules but must not exceed it (see datasheet of the PV modules).
6. Measure the insulation resistance.
7. Eliminate the short circuit.
8. Measure the remaining strings in the same manner.

   ☑ If the insulation resistance of a string deviates considerably from the theoretically calculated value, there is a ground fault present in that string.
9. Reconnect to the inverter only those strings from which the ground fault has been eliminated.
10. Reconnect all other strings to the inverter.
11. Recommission the inverter.
12. If the inverter still displays an insulation error, contact the Service. The PV modules might not be suitable for the inverter in the present quantity.

Also see:

- Calculating the insulation resistance ⇒ page 96

11.4 Manual restart after electric arc

⚠ QUALIFIED PERSON

If manual restart is configured in inverters with suitable monitoring function, and an electric arc is detected, the feed-in operation will automatically stop. You can use the following parameter to resume feed-in operation after an electric arc has been detected.

Channel	Name	Settings
Operation.OpMod	**General operating mode**	**Start**

11.5 Create Diagnostics Data

Download the diagnostic data of the device in case of failure. Diagnostic data makes it easier for SMA Service to analyze errors.

Requirement:

☐ The user interface must be open and you must be logged in.

Procedure:

1. Select the product in the focus navigation.
2. In the **Monitoring** menu, select **Diagnostics**.
3. Select **Diagnostic data**.
4. Select the required values and click [**Download**].
5. Provide diagnostic data to the SMA Service in encrypted form.

12 Decommissioning

12.1 Disconnecting the Terminals from the Inverter

⚠ QUALIFIED PERSON

To decommission the inverter completely upon completion of its service life, proceed as described in this Section. If the inverter is defective and you have received a replacement device, observe the information on Replacing the Product with a Replacement Device.

Procedure:

1. Disconnect the inverter from all voltage sources (see Section 9 "Disconnecting the Inverter from Voltage Sources", page 68).
2. Wait until the enclosure has cooled down.
3. Unscrew the swivel nut from the threaded sleeve for the network cable.
4. Unscrew and remove the threaded sleeve from the network port thread on the inverter.

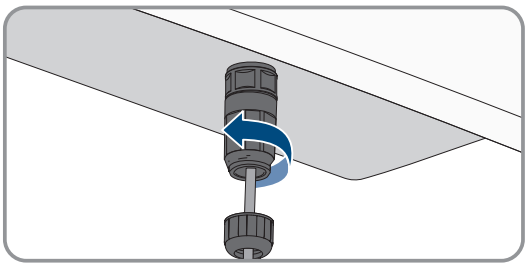

5. Release the connector of the network cable and pull it out of the network port on the inverter.
6. Take the cable support sleeve out of the threaded sleeve and remove the network cable from the cable support sleeve.
7. Lead the network cable out of the threaded sleeve and the swivel nut.

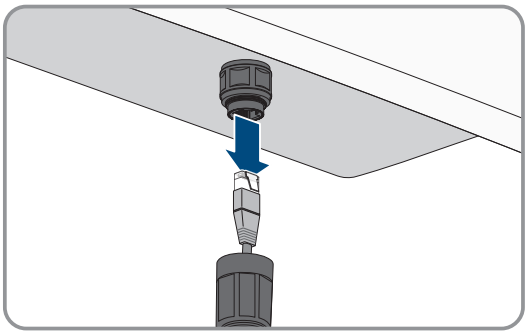

8. Screw the protective cap onto the network port.
9. The same applies to the **BAT CAN** connection.

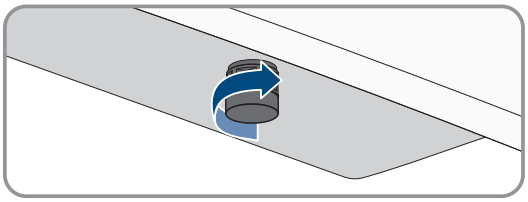

10. Unscrew and remove the antenna.
11. If there is a protective cap available, plug the protective cap onto the jack for connecting the antenna.

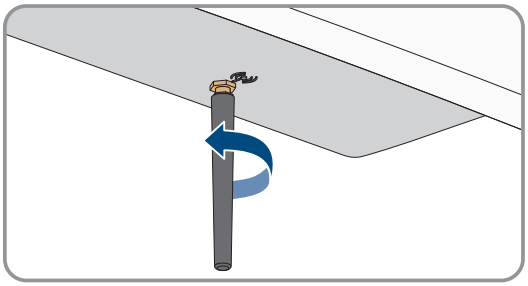

12. If present, remove the Multi I/O connector from the socket.
13. Put the protective cap on the socket.
14. Remove the AC grounding conductor. To do this, unscrew the screw M5x12 at the connection point and remove the grounding cable.

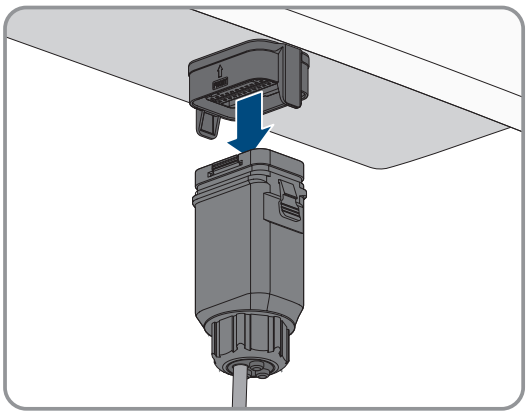

12.2 Disassembling the PV Connectors

⚠ QUALIFIED PERSON

To disassemble the PV connectors for connection to the PV modules (e.g., due to faulty assembly), proceed as follows.

⚠ DANGER

Danger to life due to electric shock when touching exposed DC conductors or DC plug contacts if the DC connectors are damaged or loose

The DC connectors can break or become damaged, become free of the DC cables, or no longer be connected correctly if the DC connectors are released and disconnected incorrectly. This can result in the DC conductors or DC plug contacts being exposed. Touching live DC conductors or DC plug connectors will result in death or serious injury due to electric shock.

- Wear insulated gloves and use insulated tools when working on the DC connectors.
- Ensure that the DC connectors are in perfect condition and that none of the DC conductors or DC plug contacts are exposed.
- Carefully release and remove the DC connectors as described in the following.

Procedure:

1. Release and remove the PV connectors. To do so, insert a flat-blade screwdriver or an angled screwdriver (blade width: 3.5 mm) into one of the side slots and pull the PV connectors out. When doing so, do not lever the PV connectors out, but insert the tool into one of the side slots only to release the locking mechanism, and do not pull on the cable.

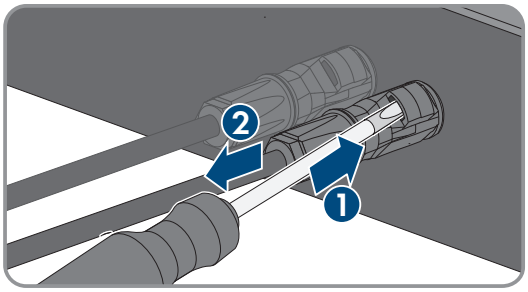

2. Remove the PV connector union nut.

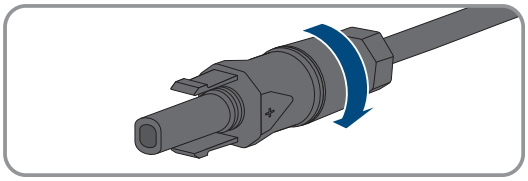

3. Unlock the PV connector. To do this, insert a flat-blade screwdriver (blade width: 3.5 mm) into the side catch mechanism and pry the catch mechanism open.
4. Carefully pull the PV connector apart.

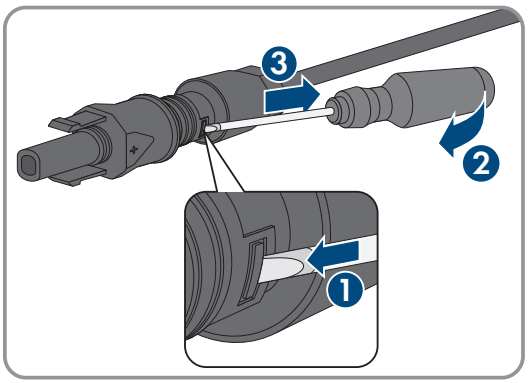

5. Release the clamping bracket. To do so, insert a flat-blade screwdriver (blade width: 3.5 mm) into the clamping bracket and pry the clamping bracket open.
6. Remove the cable.

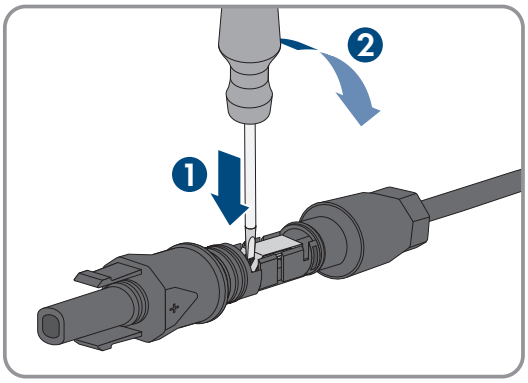

12.3 Disassembling the Inverter

⚠ QUALIFIED PERSON

To decommission the inverter completely upon completion of its service life, proceed as described in this Section. If the inverter is defective and you have received a replacement device, observe the information on (see Section 13 "Replacing the Product", page 102).

⚠ CAUTION

Risk of injury due to weight of product

Injuries may result if the product is lifted incorrectly or dropped while being transported or mounted.

- Transport and lift the product carefully. Take the weight of the product into account.
- Wear suitable personal protective equipment for all work on the product.

Procedure:

1. If the protective cover for the connection area is still in place, reattach the protective cover to the inverter. Otherwise, protect the connection area with another sturdy cover.
2. Unscrew the pan head screws M5x12 on the left and right used to secure the inverter to the mounting bracket (TX30).
3. Lift the inverter up vertically off the mounting bracket.
4. Unscrew the screws for fastening the mounting bracket and remove the wall mounting bracket.
5. If the inverter is to be stored or shipped, pack the inverter, the AC connectors, the DC connectors, the antenna, the RJ45 protective sleeve, the battery connection cables, the connector for connecting the battery communication and the digital inputs and outputs, and the mounting bracket. Use the original packaging or packaging that is suitable for the weight and dimensions of the inverter. Dispose of the inverter.
6. Dispose of the inverter in accordance with the locally applicable disposal regulations for electronic waste (see Section 14 "Disposal", page 103).

13 Replacing the Product

⚠ QUALIFIED PERSON

Under fault conditions, an SMA product in the system may need to be replaced. If this is the case, you will receive a replacement device from SMA Solar Technology AG. If you received a replacement device, replace the defective product with the replacement device as described below.

1. Decommission the defective product.
2. Mount the replacement device and make the electrical connections.
3. Commission the replacement device.
4. If the defective product was included in a System Manager (e.g., inverter configured as a System Manager) or communication product (e.g., Sunny Home Manager), replace it with the new product in the System Manager or communication product (see manual of the communication product or System Manager).
5. If the System Manager has been replaced, confirm the replaced device in Sunny Portal (see Sunny Portal manual)
6. Pack the defective product in the packaging of the replacement device and arrange with SMA Solar Technology AG for it to be picked up. If a mounting bracket is enclosed with the replacement device, pack it with the defective product.

14 Disposal

The product must be disposed of in accordance with the locally applicable disposal regulations for waste electrical and electronic equipment.



15 Technical Data

15.1 General Data

Width x height x depth	467 mm x 555 mm x 239 mm
Weight	33.5 kg
Way of attaching	Mounting bracket
Environmental category	Outdoors
Pollution degree of all enclosure parts	2
Typical noise emission	< 36 dB(A)
Power loss in night mode	< 18 W
Topology	Transformerless (Non-isolated)
Cooling method	natural convection
Number of internal fans	1
Number of external fans	0
Degree of protection in accordance with IEC 60529	IP65
Corrosivity classification according to IEC 61701 (at a minimum distance of 0.5 km (0.3 mile) from the coast)	C5
Protection class in accordance with IEC 62109-1	I
Radio technology	WLAN 802.11 b/g/n
Radio spectrum	2.4 GHz
Maximum transmission power	100 mW / 20 dBm
Grid configurations	TN-C, TN-S, TN-C-S, TT

15.2 DC input of PV

	STPH5-60	STPH6-60	STPH8-60	STPH10-60	STPH12-60	STPH15-60
DC connection	Sunclix					
Maximum connectable power of PV modules	7500 Wp	9000 Wp	12000 Wp	15000 Wp	18000 Wp	22500 Wp
Maximum usable power of PV modules	7500 Wp	9000 Wp	12000 Wp	15000 Wp	18000 Wp	22500 Wp
Maximum PV input voltage	1000 V					

	STPH5-60	STPH6-60	STPH8-60	STPH10-60	STPH12-60	STPH15-60
Min. MPP voltage at nominal power	100 V	120 V	160 V	200 V	240 V	300 V
Max. MPP voltage at nominal power	850 V					
Rated input PV voltage	650 V					
Minimum PV input voltage	90 V					
Initial input voltage	100 V	100 V	100 V	100 V	100 V	100 V
Maximum usable input current per MPPT input	18 A					
Maximum usable input current DC per string	18 A					
Maximum short-circuit current (per MPP tracker)	24 A					
Maximum short-circuit current per string	24 A					
Maximum reverse current into the PV modules	0 A					
Number of independent MPP inputs	3					
Strings per MPP input	1					

	STPH5-60	STPH6-60	STPH8-60	STPH10-60	STPH12-60	STPH15-60
Overvoltage category as per IEC 62109-1	AC III / DC II					
Maximum PV module coupling capacity to ground according to IEC 63112	0.75 µF	0.9 µF	1.2 µF	1.5 µF	1.8 µF	2.25 µF

15.3 Battery DC input

	STPH5-60	STPH6-60	STPH8-60	STPH10-60	STPH12-60	STPH15-60
Battery voltage range	80 V to 600 V					
Minimum connectable battery voltage	80 V					
Maximum connectable battery voltage	600 V					
Maximum usable charging current (battery)	50 A					
Maximum usable discharging current (battery)	50 A					
Maximum usable charge capacity (battery)	10000 W	10000 W	10000 W	10000 W	15000 W	15000 W
Maximum usable discharge capacity (battery)	5270 W	6320 W	8430 W	10530 W	12640 W	15790 W
Number of independent battery inputs	1					
Overvoltage category (according to IEC 60664-1)	II					

15.4 AC Output

	STPH5-60	STPH6-60	STPH8-60	STPH10-60	STPH12-60	STPH15-60
AC connection	Connector with screw terminals					
Rated power at 230 V, 50 Hz	5000 W	6000 W	8000 W	10000 W	12000 W	15000 W
Maximum apparent power	5000 VA	6000 VA	8000 VA	10000 VA	12000 VA	15000 VA
Rated apparent power	5000 VA	6000 VA	8000 VA	10000 VA	12000 VA	15000 VA
Nominal grid voltage AC	380 / 400 / 415 V					
AC voltage range [4]	184 V to 264 V					
Rated current at 230 V	7.2 A	8.7 A	11.6 A	14.5 A	17.4 A	21.7 A
Maximum output current	7.6 A	9.1 A	12.1 A	15.2 A	18.2 A	22.7 A
Maximum output current under fault conditions	0 A					
Inrush current	< 10% of the nominal AC current for a maximum of 10 ms					
Total harmonic distortion of the output current at total harmonic distortion of the AC voltage <2%, and the AC power >50% of the rated power	< 3%					
Rated grid frequency AC	50 Hz					
Grid frequency	50 Hz					
Operating range at grid frequency 50 Hz	45 to 55 Hz					

[4] Depending on the configured country data set

	STPH5-60	STPH6-60	STPH8-60	STPH10-60	STPH12-60	STPH15-60
Power factor at rated power	1					
Displacement power factor, adjustable	0.8 overexcited to 0.8 underexcited					
Feed-in phases	3					
Connection phases	3-(N)-PE					
Overvoltage category as per IEC 62109-1	III					

15.5 Digital inputs

Quantity	5 (1x Fast Stop)
Input voltage	12 V DC
Maximum cable length	100 m

15.6 Efficiency

	STPH5-60	STPH6-60	STPH8-60	STPH10-60	STPH12-60	STPH15-60
Maximum efficiency, η_{max}	98.1%	98.2%	98.3%	98.3%	98.3%	98.3%
European weighted efficiency, η_{EU}	96.0%	96.5%	97.1%	97.4%	97.6%	97.8%

15.7 Digital output, multifunction relay

Quantity	2
Execution	Potential-free relay contacts
Maximum switching voltage	30 V DC
Maximum switching current	1 A
Minimum switching current	10 mA
Minimum electrical endurance when the maximum switching voltage and maximum switching current are complied with [5]	100000 switching cycles
Bounce time	5 ms

[5] Corresponds to 20 years at 12 switching operations per day

Reset time	5 ms
Maximum cable length	< 30 m

15.8 Communication

SMA devices	10 devices with SMA Speedwire (including a maximum of 5 inverters), 100 Mbit/s
I/O systems and meters	Ethernet, 10/100 Mbit/s, Modbus TCP

15.9 Protective devices

Grid monitoring	Available
Input-side disconnection point	DC load-break switch
DC reverse polarity protection	Short-circuit diode
AC short-circuit current capability	Current control
Leakage current protection	Available
AC overvoltage protection"	Surge arrester type 2
DC overvoltage protection	Surge arrester type 1 and type 2
Ground fault monitoring	Insulation monitoring: R_{iso} > 100 kΩ
Arc-fault circuit interrupter (AFCI)	Available
All-pole sensitive residual-current monitoring unit	Available
Active islanding detection	Yes

15.10 Data Storage Capacity

1-minute values	7 days
5-minute values	7 days
15-minute values	30 days
60-minute values	3 years
Event messages	1024 events

15.11 Climatic Conditions

Operating temperature range	-25°C to +60°C
Max. permissible value for relative humidity (condensing)	4% to 100%
Maximum operating altitude above mean sea level (MSL)	3000 m
Transport in accordance with IEC 60721-3-2, Class 2K12	
Temperature range	-40°C to +70°C

15.12 SPS output (secure power supply operation) during off-grid mode

Rated power (at 230 V)	3680 W
Maximum apparent AC power (at 230 V, 50 Hz)	3680 VA
Maximum output current for backup load	16 A
Nominal grid voltage AC	230 V
AC frequency	50 Hz
Switching mode	Manual

15.13 Backup output (battery-backup operation) during off-grid mode (only applies to System Manager)

	STPH5-60 / STPH6-60 / STPH8-60 / STPH10-60	STPH12-60 / STPH15-60
Rated power 1~ (at 230 V, 50 Hz)	3680 W	5000 W
Rated power 3~ (at 230 V, 50 Hz)	10000 W	15000 W
Maximum apparent AC power (at 230 V, 50 Hz)	10000 VA	15000 VA
Maximum output current	16 A	22.7 A
Maximum output current < 2s	32 A	43.5 A
Maximum output current < 5s	24 A	32.6 A
Nominal grid voltage AC	230 V / 400 V	
AC grid frequency	50 Hz	
Switching mode	Automatic	
Switching time to backup operation	approx. 1 s	

16 EU Declaration of Conformity

within the scope of the EU directives

- Electromagnetic compatibility 2014/30/EU (29.3.2014 L 96/79-106) (EMC)
- Low Voltage Directive 2014/35/EU (29.3.2014 L 96/357-374) (LVD)
- Radio Equipment Directive 2014/53/EU (22.5.2014 L 153/62) (RED)
- Restriction of the use of certain hazardous substances 2011/65/EU (L 174/88, June 8, 2011) and 2015/863/EU (L 137/10, March 31, 2015) (RoHS)

SMA Solar Technology AG confirms herewith that the products described in this document are in compliance with the fundamental requirements and other relevant provisions of the aforementioned directives. More information on the availability of the entire Declaration of Conformity can be found at https://www.sma.de/en/ce-ukca.

Radio technology	WLAN 802.11 b/g/n
Radio spectrum	2.4 GHz
Maximum transmission power	100 mW

17 Contact

If you experience any technical problems with our products, please contact the Service. The following data is required in order to provide you with the necessary assistance:

- Device type
- Serial number
- Firmware version
- Device configuration (System Manager or subordinate device)
- Special country-specific settings (if available)
- Event message
- Installation site and mounting height
- Type and number of PV modules
- Optional equipment (e.g. accessories used)
- Use the name of the system in Sunny Portal (if available)
- Information on the ripple control receiver (if available)
- Operating mode of the multifunction relay (if used)
- Detailed description of the problem

You can find your country's contact information at:

https://go.sma.de/service

ENERGY
THAT
CHANGES

SMA

www.SMA-Solar.com