Installation Manual

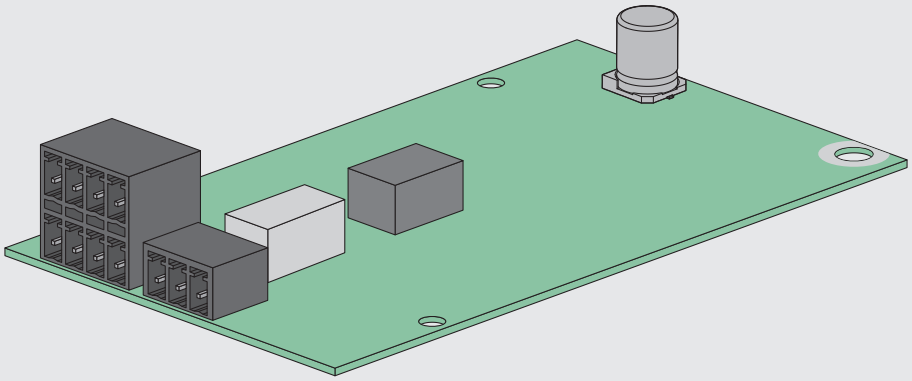

SMA I/O MODULE

MD.IO-41 (PC-PWC.BG1)

Legal Provisions

The information contained in these documents is the property of SMA Solar Technology AG. No part of this document may be reproduced, stored in a retrieval system, or transmitted, in any form or by any means, be it electronic, mechanical, photographic, magnetic or otherwise, without the prior written permission of SMA Solar Technology AG. Internal reproduction used solely for the purpose of product evaluation or other proper use is allowed and does not require prior approval.

SMA Solar Technology AG makes no representations or warranties, express or implied, with respect to this documentation or any of the equipment and/or software it may describe, including (with no limitation) any implied warranties of utility, merchantability, or fitness for any particular purpose. All such representations or warranties are expressly disclaimed. Neither SMA Solar Technology AG nor its distributors or dealers shall be liable for any indirect, incidental, or consequential damages under any circumstances.

The exclusion of implied warranties may not apply in all cases under some statutes, and thus the above exclusion may not apply.

Specifications are subject to change without notice. Every attempt has been made to make this document complete, accurate and up-to-date. Readers are cautioned, however, that product improvements and field usage experience may cause SMA Solar Technology AG to make changes to these specifications without advance notice or per contract provisions. SMA Solar Technology AG shall not be responsible for any damages, including indirect, incidental or consequential damages, caused by reliance on the material presented, including, but not limited to, omissions, typographical errors, arithmetical errors or listing errors in the content material.

SMA Warranty

You can download the current warranty conditions from the Internet at www.SMA-Solar.com.

Trademarks

All trademarks are recognized, even if not explicitly identified as such. Missing designations do not mean that a product or brand is not a registered trademark.

SMA Solar Technology AG

Sonnenallee 1

34266 Niestetal

Germany

Tel. +49 561 9522-0

Fax +49 561 9522-100

www.SMA.de

E-mail: info@SMA.de

Status: Monday, November 4, 2024

Copyright © 2024 SMA Solar Technology AG. All rights reserved.

Table of Contents

1 Information on this Document 5
1.1 Validity 5
1.2 Target Group 5
1.3 Content and Structure of this Document 5
1.4 Levels of Warning Messages 5
1.5 Symbols in the Document 5
1.6 Typographies in the document 6
1.7 Designations in the Document 6
1.8 Additional Information 6

2 Safety 8
2.1 Intended Use 8
2.2 IMPORTANT SAFETY INFORMATION 8

3 Scope of Delivery 10

4 Product overview 11
4.1 Product Description 11
4.2 Type Label 11

5 Mounting in the STP 50-4x and STP 50-JP-40 12
5.1 Mounting position 12
5.2 Installing the Module 12

6 Mounting in the STPSxx-20 and SIxx-20 14
6.1 Mounting position 14
6.2 Installing the Module 14

7 Connection 17
7.1 Cable Requirements 17
7.2 Pin assignments 17
7.2.1 Pin assignment for terminal INPUT 17
7.2.2 Pin assignment for terminal OUTPUT 18
7.3 Preparing the Connection Cable 18
7.4 Inserting the Cables 18
7.5 Connection of a Ripple Control Receiver 19
7.5.1 Use of the Ripple Control Receiver for Several Inverters 19
7.5.2 Requirements for the Connection of a Ripple Control Receiver 19
7.5.3 Circuitry Overview with Ripple Control Receiver 19
7.5.4 Circuitry Overview with a Ripple Control Receiver and Grid and PV System Protection 20
7.5.5 Connecting the Ripple Control Receiver 20
7.6 Connection of a Grid and PV System Protection 21
7.6.1 Requirements for the Connection of a Grid and PV System Protection 21
7.6.2 Circuitry Overview with Grid and PV System Protection 21
7.6.3 Connecting Grid and PV System Protection 22
7.7 STP 50-4x / STP 50-JP-40: Connection to the multifunction relay 22
7.7.1 Requirements for the Connection to the Multifunction Relay 22
7.7.2 Connecting the Multifunction Relay 23

8 Decommissioning 24
8.1 Removing the Module from STPSxx-20 / SIxx-20 24
8.2 Removing the Module from STP 50-4x / STP 50-JP-40 25

8.3 Packing the Product for Shipment 27
8.4 Disposing of the Product 27
9 Technical Data 28
10 EU Declaration of Conformity 29
11 Contact 30

1 Information on this Document

1.1 Validity

This document is valid for:

- SMA I/O Module (MD.IO-41) with assembly designation "PC-PWC.BG1" from hardware version A1

1.2 Target Group

The tasks described in this document must only be performed by qualified persons. Qualified persons must have the following skills:

- Knowledge of how an inverter works and is operated
- Training in how to deal with the dangers and risks associated with installing, repairing and using electrical devices and installations
- Training in the installation and commissioning of electrical devices and installations
- Knowledge of all applicable laws, regulations, standards, and directives
- Knowledge of and compliance with this document and all safety information

1.3 Content and Structure of this Document

This document describes the installation, commissioning and decommissioning of the product.

Illustrations in this document are reduced to the essential information and may deviate from the real product.

1.4 Levels of Warning Messages

The following levels of warning messages may occur when handling the product.

⚠ DANGER
Indicates a hazardous situation which, if not avoided, will result in death or serious injury.

⚠ WARNING
Indicates a hazardous situation which, if not avoided, could result in death or serious injury.

⚠ CAUTION
Indicates a hazardous situation which, if not avoided, could result in minor or moderate injury.

NOTICE
Indicates a situation which, if not avoided, can result in property damage.

1.5 Symbols in the Document

Symbol	Explanation
i	Information that is important for a specific topic or goal, but is not safety-relevant
☐	Indicates a requirement for meeting a specific goal

Symbol	Explanation
☑	Required result
	Example

1.6 Typographies in the document

Typography	Use	Example
bold	• Messages • Terminals • Elements on a user interface • Elements to be selected • Elements to be entered	• Connect the insulated conductors to the terminals **X703:1** to **X703:6**. • Enter **10** in the field **Minutes**.
>	• Connects several elements to be selected	• Go to **Settings > Date**.
[**Button**] [**Key**]	• Button or key to be selected or pressed	• Select [**Enter**].
#	• Placeholder for variable components (e.g., parameter names)	• Parameter **WCtlHz.Hz#**

1.7 Designations in the Document

Complete designation	Designation in this document
SMA I/O modules	Module, product
Sunny Tripower CORE1	Sunny Tripower, inverter
Sunny Tripower Storage X	Sunny Tripower Storage, inverter
Sunny Island X	Sunny Island, inverter
PV system	System

1.8 Additional Information

Title and information content	Type of information
SUNNY TRIPOWER CORE1 Mounting, installation, commissioning, configuration, operation, troubleshooting and decommissioning of the Sunny Tripower CORE1	Operating manual

Title and information content	Type of information
SMA COMMERCIAL STORAGE SOLUTION 30 / 50 (SUNNY TRIPOWER STORAGE) Mounting, installation, commissioning, configuration, operation, troubleshooting, and decommissioning of the SMA Commercial Storage Solution The Sunny Tripower Storage X is part of the SMA Commercial Storage Solution.	System manual
SUNNY ISLAND X Mounting, installation, commissioning, configuration, operation, troubleshooting and decommissioning of the Sunny Island X	Operating manual

2 Safety

2.1 Intended Use

The SMA I/O Module is a module with 6 digital inputs and 1 digital output operating as a multifunction relay. The SMA I/O Module enables the implementation of grid management services for up to 12 SMA inverters in a network with the same system password. The SMA I/O Module must be installed in one SMA inverter. For the implementation of grid management services, the SMA I/O Module receives the specifications of the grid operator via a ripple control receiver. The SMA I/O Module transmits the specifications of the grid operator via Speedwire network to a maximum of 11 further SMA inverters. The multifunction relay can be configured for various operating modes. The multifunction relay can, for example, be used for switching fault indicators on and off.

The product must only be installed in the following SMA inverters:

- STP 50-40 (Sunny Tripower CORE1)
- STP 50-41 (Sunny Tripower CORE1)
- STP 50-JP-40 (Sunny Tripower CORE1-JP)
- STPS30-20 (Sunny Tripower Storage X 30)
- STPS50-20 (Sunny Tripower Storage X 50)
- SI30-20 (Sunny Island X 30)
- SI50-20 (Sunny Island X 30)

The inverter still complies with the standard after the product has been installed.

All components must remain within their permitted operating ranges and their installation requirements at all times.

The product must only be used in countries for which it is approved or released by SMA Solar Technology AG and the grid operator.

Use SMA products only in accordance with the information provided in the enclosed documentation and with the locally applicable laws, regulations, standards and directives. Any other application may cause personal injury or property damage.

Alterations to the SMA products, e.g., changes or modifications, are only permitted with the express written permission of SMA Solar Technology AG. Unauthorized alterations as well as failure to observe the documentation will void guarantee and warranty claims and in most cases terminate the operating license. SMA Solar Technology AG shall not be held liable for any damage caused by such changes.

Any use of the product other than that described in the Intended Use section does not qualify as appropriate.

The documentation supplied is an integral part of SMA products. Keep the documentation in a convenient, dry place for future reference and observe all instructions contained therein.

This document does not replace any regional, state, provincial, federal or national laws, regulations or standards that apply to the installation, electrical safety and use of the product. SMA Solar Technology AG assumes no responsibility for the compliance or non-compliance with such laws or codes in connection with the installation of the product.

The type label must remain permanently attached to the product.

2.2 IMPORTANT SAFETY INFORMATION

Keep the manual for future reference.

This section contains safety information that must be observed at all times when working.

The product has been designed and tested in accordance with international safety requirements. As with all electrical or electronical devices, some residual risks remain despite careful construction. To prevent personal injury and property damage and to ensure long-term operation of the product, read this section carefully and observe all safety information at all times.

⚠ DANGER

Danger to life due to electric shock when live components or cables of the inverter are touched

High voltages are present in the conductive components or cables of the inverter. Touching live parts and cables of the inverter results in death or lethal injuries due to electric shock.

- Disconnect the inverter from voltage sources and make sure it cannot be reconnected before working on the device.
- Wear suitable personal protective equipment for all work on the product.

NOTICE

Damage to the enclosure seal in subfreezing conditions

If you open the inverter when temperatures are below freezing, the enclosure seals can be damaged. This can lead to moisture entering the inverter.

- Only open the inverter if the ambient temperature is not below -5 °C.
- If a layer of ice has formed on the enclosure seal when temperatures are below freezing, remove it prior to opening the inverter (e.g. by melting the ice with warm air).

NOTICE

Damage to the inverter due to sand, dust and moisture

Sand, dust and moisture penetration can damage the inverter, thus impairing its functionality.

- Only open the inverter if the humidity is within the thresholds and the environment is free of sand and dust.
- Do not open the inverter during a dust storm or precipitation.

NOTICE

Damage to the inverter or product due to electrostatic discharge

Touching electronic components can cause damage to or destroy the inverter or the product through electrostatic discharge.

- Ground yourself before touching any component.

3 Scope of Delivery

Check the scope of delivery for completeness and any externally visible damage. Contact your distributor if the scope of delivery is incomplete or damaged.

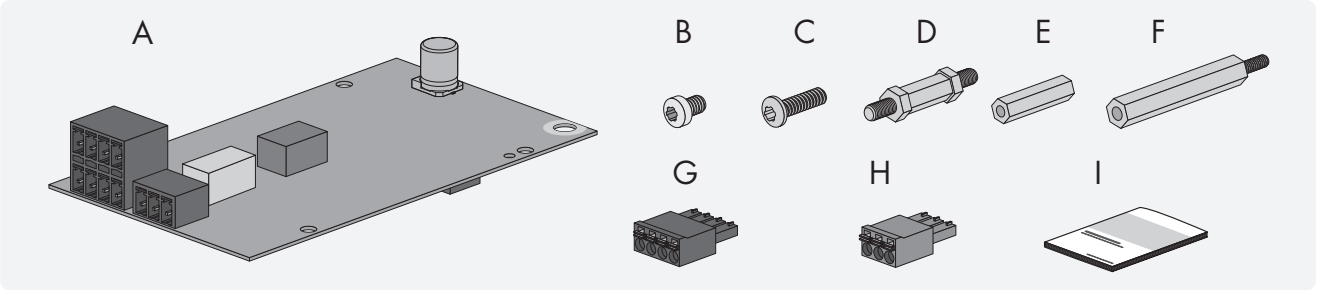

Figure 1: Components included in scope of delivery

Position	Quantity	Designation
A	1	Module of device type "PC-PWC.BG1"
B	1	Pan head screw M5x6
C	1	Pan head screw M5x16
D	3	Plastic spacer bolt with external thread (on both ends)
E	3	Plastic spacer bolt with internal thread (on both ends)
F	1	Metal spacer bolt with internal and external thread
G	2	Four-pole connector
H	1	Three-pole connector
I	1	Quick reference guide for commissioning

4 Product overview

4.1 Product Description

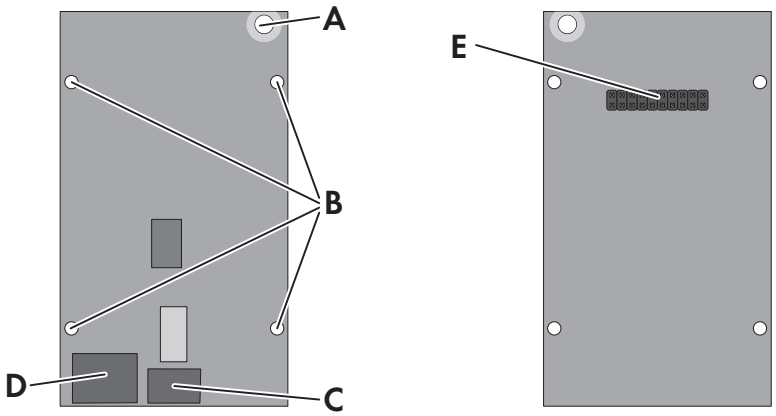

Figure 2: Module design

Position	Designation	Explanation
A	–	Opening for the fastening screw
B	–	Openings for the guide pins of the communication assembly
C	**OUTPUT**	Connecting the multifunction relay
D	**INPUT**	Terminals for ripple control receiver or grid and PV system protection
E	–	Connector strip on the back of the module for connection to the communication assembly in the inverter

4.2 Type Label

The type label clearly identifies the product. The type label is located on the front of the product.



Figure 3: Design of the type label

Position	Explanation
A	Device type
B	Serial number
C	Hardware version

You will require the information on the type label to use the product safely and when seeking customer support from Service.

5 Mounting in the STP 50-4x and STP 50-JP-40

5.1 Mounting position

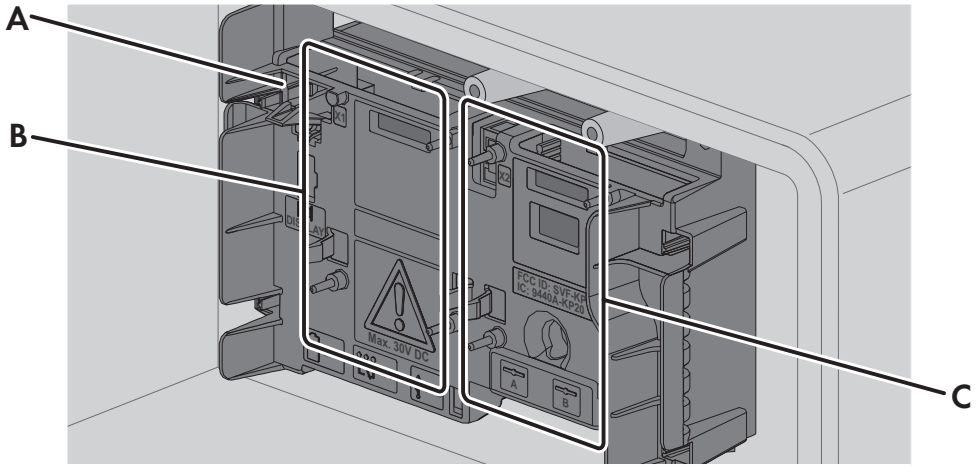

Figure 4: Communication assembly in the STP 50-4x / STP 50-JP-40 with mounting position for the module

Position	Designation
A	Communication assembly
B	Module slot **M1**[1)]
C	Module slot **M2**

5.2 Installing the Module

⚠ DANGER

Danger to life due to high voltages of the PV array

When exposed to sunlight, the PV array generates dangerous DC voltage, which is present in the DC conductors and the live components of the inverter. Touching the DC conductors or the live components can lead to lethal electric shocks.

- Prior to performing any work on the inverter, always disconnect the inverter from voltage sources on the AC and DC sides as described in the inverter manual. When doing so, note that even if the DC load-break is switched off, there will be dangerous direct voltage present in the DC conductors of the inverter.

NOTICE

Damage to the inverter due to sand, dust and moisture

Sand, dust and moisture penetration can damage the inverter, thus impairing its functionality.

- Only open the inverter if the humidity is within the thresholds and the environment is free of sand and dust.
- Do not open the inverter during a dust storm or precipitation.

i Maximum number of modules per STP 50-4x / STP 50-JP-40

You can only use a maximum of one module of the same device type per STP 50-4x / STP 50-JP-40 inverter.

Procedure:

1. Disconnect the inverter from voltage sources (at www.SMA-Solar.com).

[1)] Production resources SMA Solar Technology AG recommends using module slot **M1** for the module.

2. Remove the enclosure lid of the DC Connection Unit. Unscrew all screws with a Torx screwdriver (TX25) and remove the enclosure lid carefully forward.
3. Set the screws and the enclosure lid aside and store safely.
4. Select mounting position.
5. At the selected mounting position, guide the 3 guide pins on the communication assembly through the holes in the module. The holes in which the guide pins must be inserted depend on the mounting location.

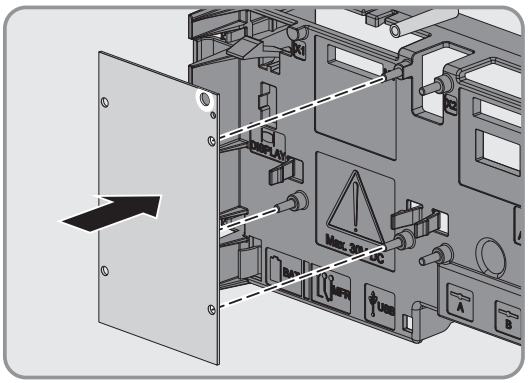

6. Carefully push the module down on the upper edge and on the connection sockets until it audibly snaps into both side locking tabs of the communication assembly. The connector strip on the back of the module is automatically pushed into the socket terminal strip of the communication assembly.

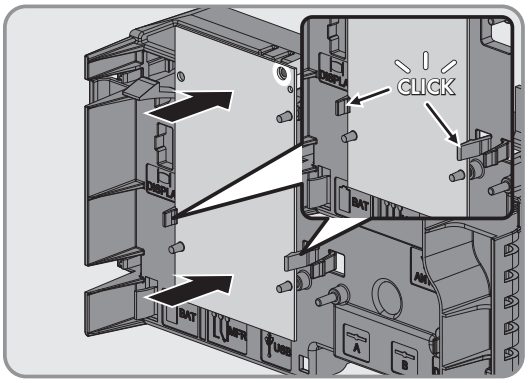

7. Screw tight the fastening screw M5x16 included with a Torx screwdriver (TX25) on the module (tightening torque: 1.5 Nm). This additionally fixes the module in place and grounds it in the inverter enclosure.

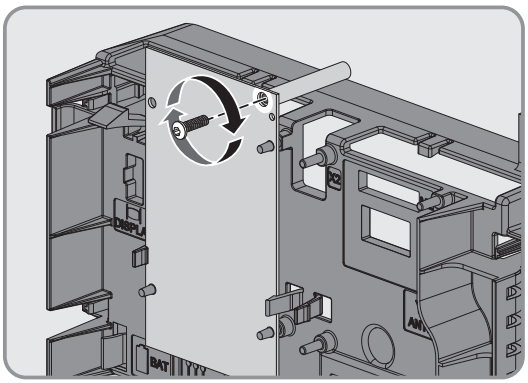

6 Mounting in the STPSxx-20 and SIxx-20

6.1 Mounting position

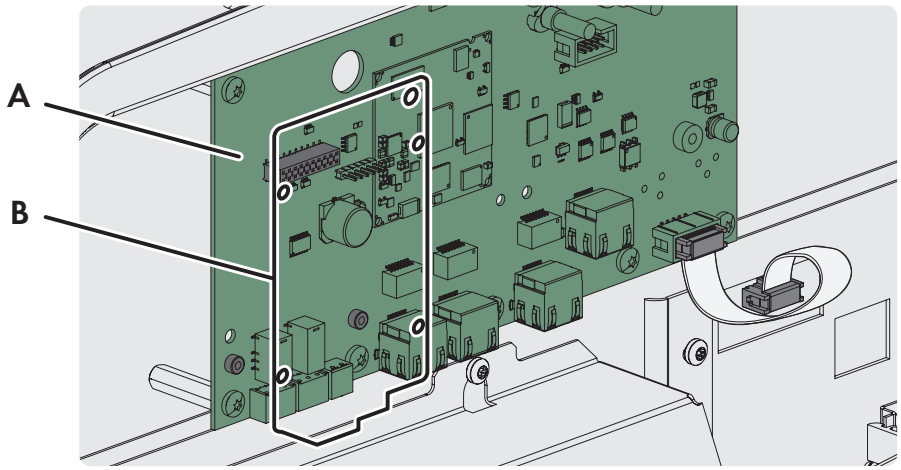

Figure 5: Communication assembly in the STPSxx-20 / SIxx-20 with mounting position for the module

Position	Designation
A	Communication assembly
B	Module slot

6.2 Installing the Module

⚠ DANGER

Danger to life due to electric shock when live components or cables of the inverter are touched

High voltages are present in the conductive components or cables of the inverter. Touching live parts and cables of the inverter results in death or lethal injuries due to electric shock.

- Disconnect the inverter from voltage sources and make sure it cannot be reconnected before working on the device.
- Wear suitable personal protective equipment for all work on the product.

NOTICE

Damage to the inverter due to sand, dust and moisture

Sand, dust and moisture penetration can damage the inverter, thus impairing its functionality.

- Only open the inverter if the humidity is within the thresholds and the environment is free of sand and dust.
- Do not open the inverter during a dust storm or precipitation.

Procedure:

1. Disconnect the inverter from all voltage sources (see the inverter manual at www.SMA-Solar.com).

2. Insert the two supplied plastic spacer bolts with external threads into the positions shown and tighten them (hexagon socket, width across flats: 6 mm, tightening torque: 0.2 Nm ± 0.05 Nm (1.8 in-lb ± 0.5 in-lb)).

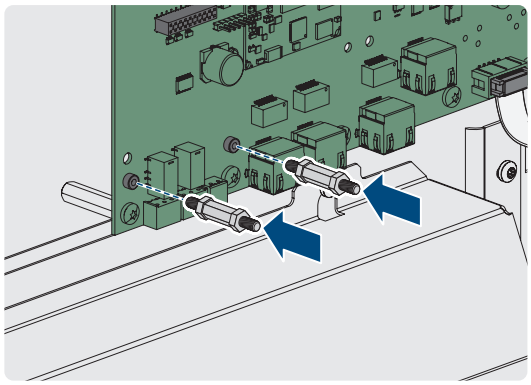

3. Insert the supplied metal spacer bolt into the position shown and tighten it hand-tight (hexagon socket, width across flats: 8 mm, tightening torque: 4.5 Nm ± 0.3 Nm (39 in-lb ± 2.65 in-lb)).

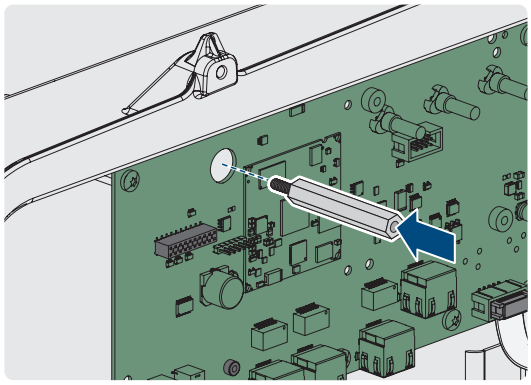

4. Guide the guide pins of both plastic spacer bolts through the two lower holes in the module. Push the connector strip on the back of the module into the socket terminal strip on the communication assembly.

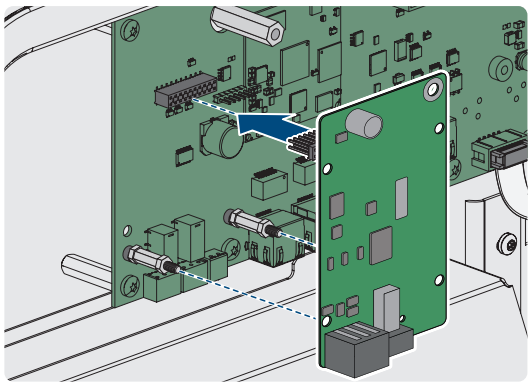

5. Insert the supplied pan head screw M5x16 into the position shown and tighten it hand-tight (TX25, tightening torque: 4.0 Nm ± 0.3 Nm (35 in-lb ± 2.65 in-lb)).

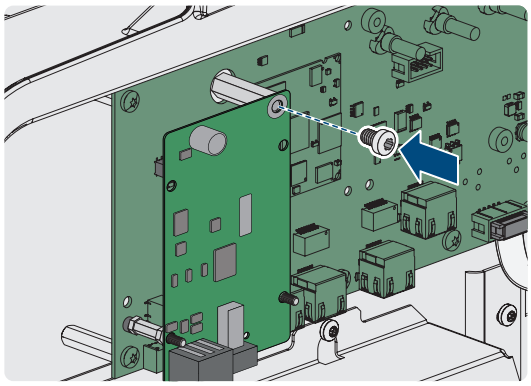

6. Insert the two supplied plastic spacer bolts with internal threads into the positions shown and tighten them hand-tight (hexagon socket, width across flats: 5.5 mm, tightening torque: 0.15 Nm ± 0.05 Nm (1.3 in-lb ± 0.5 in-lb).

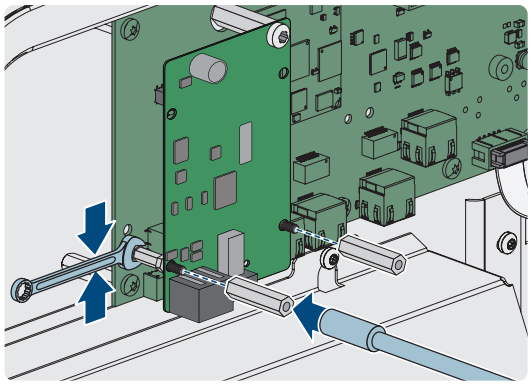

7 Connection

7.1 Cable Requirements

UV resistance of connection cables

Connection cables to be laid outdoors must be UV-resistant or routed in a UV-resistant cable channel.

- Number of conductors:
  For connecting the ripple control receiver: at least 5 insulated conductors
  For connecting to the multifunction relay: at least 2 insulated conductors
  Tip: You can use 1 common cable with at least 7 insulated conductors to connect both the ripple control receiver and the multifunction relay
- Conductor cross-section: 0.5 mm² to 0.75 mm²
- Maximum cable length: 200 m

7.2 Pin assignments

7.2.1 Pin assignment for terminal INPUT

The digital signals for the specifications to the grid management services are transmitted to the **INPUT** terminal of the module. Up to 6 control signals can be transmitted.

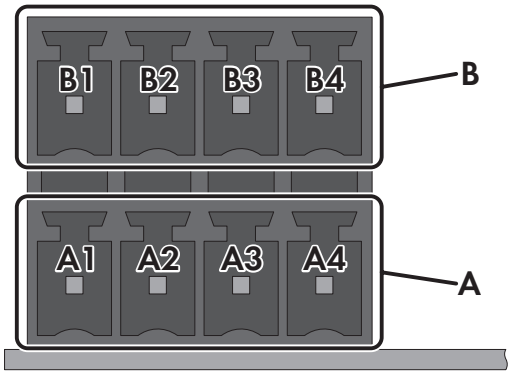

Figure 6: Pin assignment for terminal **INPUT**

Pin row	Pin	Assignment	Explanation
B	B1	24 V	Voltage supply output
	B2	IN	Digital input 1
	B3	IN	Digital input 2
	B4	IN	Digital input 3
A	A1	24 V	Voltage supply output
	A2	IN	Digital input 4
	A3	IN	Digital input 5
	A4	IN	Digital input 6

Also see:

- Connecting the Ripple Control Receiver ⇒ page 20
- Connecting Grid and PV System Protection ⇒ page 22

7.2.2 Pin assignment for terminal OUTPUT

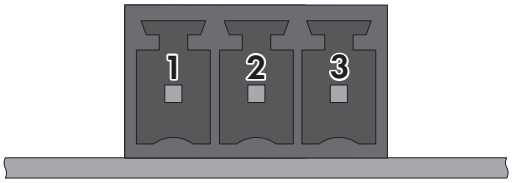

Figure 7: Pin assignment for terminal **OUTPUT**

Pin	Explanation
1	Make contact
2	Change-over contact
3	Break contact

Also see:

- Connecting the Multifunction Relay ⇒ page 23

7.3 Preparing the Connection Cable

Always proceed as follows to prepare each connection cable for connection to multipole terminal blocks.

Procedure:

1. Strip 40 mm of cable sheath from the end of the connection cable to which the multipole terminal block is to be attached. Make sure that no pieces of cable are dropped into the inverter.
2. Strip off 6 mm of the conductor insulation from each of the required connection cable conductors (see Section 7.1, page 17).
3. Trim unneeded insulated conductors of the connection cable flush with the cable sheath.
4. Push 1 bootlace ferrule onto each stripped insulated conductor up to the stop, if necessary.

7.4 Inserting the Cables

Additionally required material (not included in the scope of delivery):

☐ Connection cable (see Section 7.1, page 17)

Procedure:

1. Make sure that the inverter has been disconnected and is secured against reconnection (see the inverter manual).
2. Remove the swivel nut from the cable gland for the communication cable.
3. Thread the swivel nut over the cable.
4. Press the two-hole cable support sleeve out of the cable gland.
5. Remove the sealing plug from one of the enclosure openings of the two-hole cable support sleeve and insert the cable into the enclosure opening.
6. Press the two-hole cable support sleeve with the cable into the cable gland and guide the cable to the communication assembly in the DC Connection Unit. Ensure that any unused enclosure openings of the two-hole cable support sleeve are sealed with sealing plugs.
7. Tighten the swivel nut on the cable gland hand-tight. This will secure the cable.

7.5 Connection of a Ripple Control Receiver

7.5.1 Use of the Ripple Control Receiver for Several Inverters

You can use the signal from one ripple control receiver for a maximum of twelve inverters. To this end, you must only equip one of the inverters in the PV system with the module. This inverter forwards the signals of the ripple control receiver via communication signal via LAN or WLAN to the other inverters in the PV system. For this, all inverters must be located in the same local network and have the same PV system password.

7.5.2 Requirements for the Connection of a Ripple Control Receiver

Additional required material (not included in the scope of delivery):

☐ 1 ripple control receiver:

The ripple control receiver must be equipped with safely separated potential-free contacts.

Requirements:

☐ The ripple control receiver must be technically suitable for connection to the digital inputs.

☐ The connection cable is prepared for connection to the multipole connector.

☐ The connection cable must be inserted into the inverter (see the inverter manual).

Also see:

- Technical Data ⇒ page 28
- Preparing the Connection Cable ⇒ page 18
- Inserting the Cables ⇒ page 18
- Connecting the Ripple Control Receiver ⇒ page 20

7.5.3 Circuitry Overview with Ripple Control Receiver

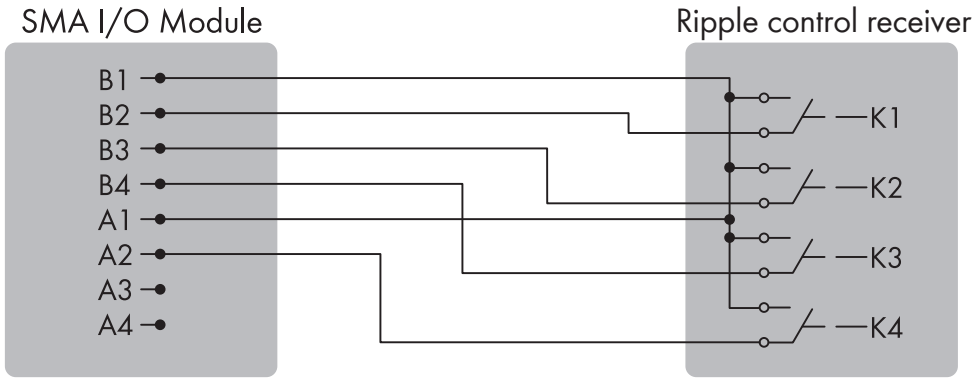

Figure 8: Connection of a Ripple Control Receiver

Also see:

- Connecting the Ripple Control Receiver ⇒ page 20

7.5.4 Circuitry Overview with a Ripple Control Receiver and Grid and PV System Protection

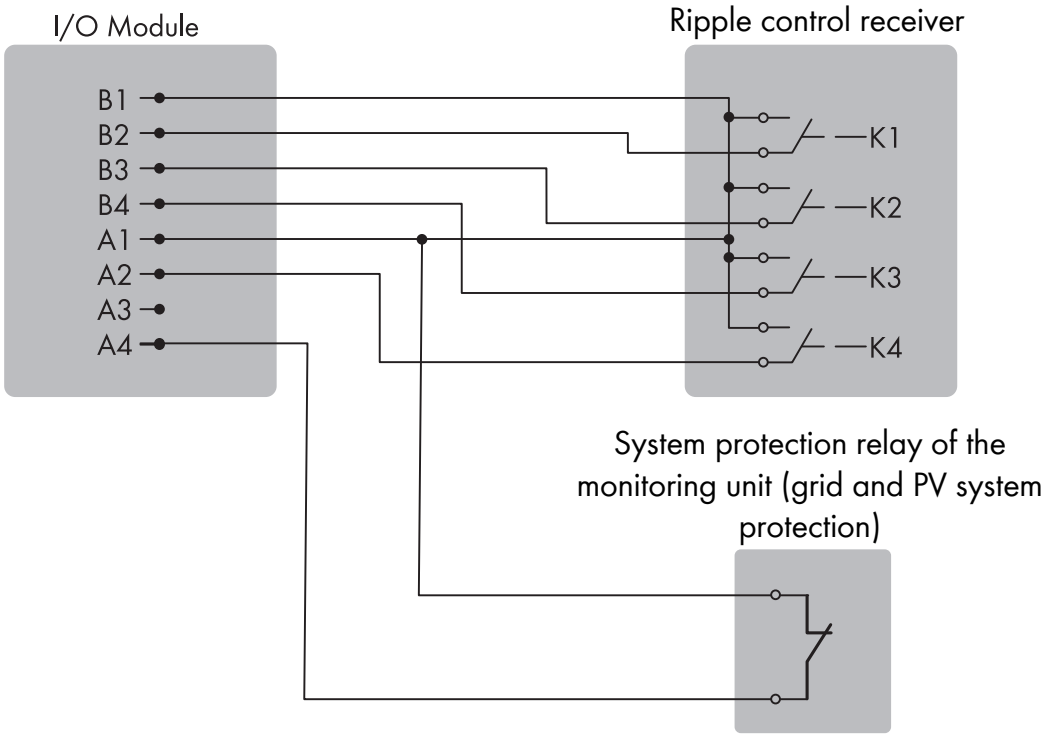

Figure 9: Connection of a ripple control receiver and grid and PV system protection

Also see:

- Connecting the Ripple Control Receiver ⇒ page 20
- Connecting Grid and PV System Protection ⇒ page 22

7.5.5 Connecting the Ripple Control Receiver

⚠ DANGER

Danger to life due to electric shock from faulty connection of the ripple control receiver

Incorrect connection of the ripple control receiver can result in grid voltage on the inverter enclosure. Touching the live enclosure results in death or lethal injuries due to electric shock.

- Do not connect the insulated conductors of the connection cable to the line conductors of the ripple control receiver.
- When connecting, ensure that no bridge is being used in the ripple control receiver.

Procedure:

1. Connect the connection cable to the ripple control receiver (see the manual from manufacturer). Trim the unused insulated conductors up to the cable sheath and write down the conductor colors of the required insulated conductors.
2. Connect the connection cable to the four-pole connector. For this purpose, identify the conductor entries that are required for connecting the connection cable depending on the ripple control receiver and the pin assignment at the terminal **INPUT**. The voltage supply (24 V) only needs to be connected once.
3. Release the required conductor entries using a screwdriver and insert the insulated conductors into the conductor entries. Ensure that the noted conductor colors correspond to the pin assignment of the connection **INPUT** .
4. Insert the four-pole connector at terminal **INPUT** into the desired pin row.

5. If needed, make more connections on the module.
6. If no further connections are required on the module, close the inverter and commission it (see the inverter manual or system manual).
7. Configure the digital inputs via the user interface of the inverter (see the inverter manual or system manual).

Also see:

- Use of the Ripple Control Receiver for Several Inverters ⇒ page 19
- Pin assignment for terminal INPUT ⇒ page 17
- Circuitry Overview with Ripple Control Receiver ⇒ page 19
- Requirements for the Connection of a Ripple Control Receiver ⇒ page 19
- Circuitry Overview with a Ripple Control Receiver and Grid and PV System Protection ⇒ page 20

7.6 Connection of a Grid and PV System Protection

7.6.1 Requirements for the Connection of a Grid and PV System Protection

Additional required material (not included in the scope of delivery):

☐ 1 signal generator

The signal generator must be equipped with a safely separated potential-free contact.

Requirements:

☐ The signal generator must be technically suitable for connection to the digital inputs.

☐ The connection cable is prepared for connection to the multipole connector.

☐ The connection cable must be inserted into the inverter (see the inverter manual).

Also see:

- Connecting Grid and PV System Protection ⇒ page 22
- Preparing the Connection Cable ⇒ page 18
- Inserting the Cables ⇒ page 18
- Technical Data ⇒ page 28
- Mounting in the STPSxx-20 and SIxx-20 ⇒ page 14

7.6.2 Circuitry Overview with Grid and PV System Protection

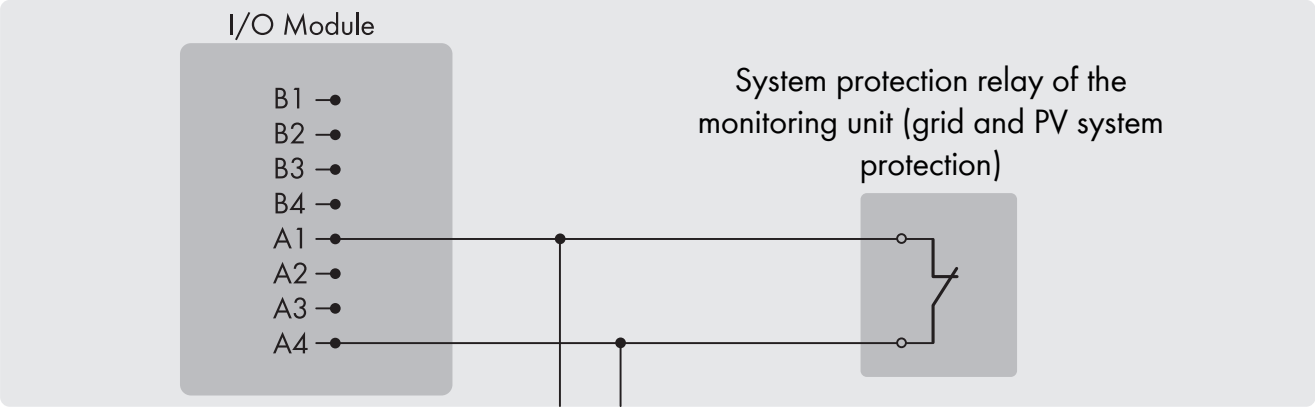

Figure 10: Connection of a grid and PV system protection

Also see:

- Connecting Grid and PV System Protection ⇒ page 22

7.6.3 Connecting Grid and PV System Protection

1. Connect the connection cable to the signal generator (see the manual from manufacturer). Trim the unused insulated conductors up to the cable sheath and write down the conductor colors of the required insulated conductors.
2. Connect the connection cable to the four-pole connector. For this purpose, identify the conductor entries that are required for connecting the connection cable depending on the ripple control receiver and the pin assignment at the terminal **INPUT**. The voltage supply (24 V) only needs to be connected once.
3. Release the required conductor entries using a screwdriver and insert the insulated conductors into the conductor entries. Ensure that the noted conductor colors correspond to the pin assignment of the connection **INPUT** .
4. Insert the four-pole connector at terminal **INPUT** into the desired pin row.
5. If needed, make more connections on the module.
6. If no further connections are required on the module, close the inverter and commission it (see the inverter manual or system manual).
7. Configure the digital inputs via the user interface of the inverter (see the inverter manual or system manual).

Also see:

- Pin assignment for terminal INPUT ⇒ page 17
- Circuitry Overview with Grid and PV System Protection ⇒ page 21
- Requirements for the Connection of a Grid and PV System Protection ⇒ page 21
- Circuitry Overview with a Ripple Control Receiver and Grid and PV System Protection ⇒ page 20

7.7 STP 50-4x / STP 50-JP-40: Connection to the multifunction relay

7.7.1 Requirements for the Connection to the Multifunction Relay

☐ The module must be mounted in a Sunny Tripower CORE1.

☐ You must select the connection option depending on the desired function of the multifunction relay (see inverter manual).

☐ The contactors must be technically suitable for connection to the multifunction relay.

☐ The remote terminal must be technically suitable for connection to the multifunction relay.

☐ The connection cable is prepared for connection to the multipole connector.

☐ The connection cable must be inserted through the cable gland into the inverter.

Also see:

- Technical Data ⇒ page 28
- Preparing the Connection Cable ⇒ page 18
- Inserting the Cables ⇒ page 18
- Mounting in the STP 50-4x and STP 50-JP-40 ⇒ page 12
- Connecting the Multifunction Relay ⇒ page 23

7.7.2 Connecting the Multifunction Relay

⚠ WARNING

Danger to life due to electric shock if the maximum switching voltage of the multifunction relay is exceeded

The multifunction relay is designed for a maximum switching voltage of 30 V_{DC}. Connecting a remote terminal with higher voltage can result in death or serious injury from electric shock.

- Observe the maximum switching voltage of 30 V_{DC} when making the connection.

NOTICE

Minimum switching current required to prevent surface corrosion of the relay contacts

Surface corrosion can impair the functionality of the multifunction relay. In order to prevent surface corrosion of the relay contacts, a minimum current must flow over the relay at the moment of switching.

- If the relay does not switch a load but only a control signal, make sure that a minimum switching current of 10 mA flows over the relay at the 10 V switching moment.

Operating modes and connection option

The operating modes and connection options of the multifunctional relay on the module are identical to the operating modes and connection options of the multifunctional relay on the communication assembly of the inverter. For more information see the inverter manual at www.SMA-Solar.com.

Procedure:

1. Connect the connection cable to the remote terminal (see the remote terminal manual). Trim the unused insulated conductors up to the cable sheath and write down the conductor colors.
2. Connect the connection cable to the three-pole connector. For this purpose, identify the conductor entries that are required for the connection of the connection cable depending on the remote terminal and the pin assignment at the **OUTPUT** connector.
3. Release the required conductor entries using a screwdriver and insert the insulated conductors into the conductor entries. Ensure that the noted conductor colors correspond to the pin assignment on the terminal **OUTPUT**.
4. Insert the three-pole connector into the pin row in terminal **OUTPUT**.
5. If no further connections are required on the module, close the inverter and commission it (see the inverter manual).

Also see:

- Pin assignment for terminal OUTPUT ⇒ page 18
- Requirements for the Connection to the Multifunction Relay ⇒ page 22

8 Decommissioning

8.1 Removing the Module from STPSxx-20 / SIxx-20

⚠ DANGER

Danger to life due to electric shock when live components or cables of the inverter are touched

High voltages are present in the conductive components or cables of the inverter. Touching live parts and cables of the inverter results in death or lethal injuries due to electric shock.

- Disconnect the inverter from voltage sources and make sure it cannot be reconnected before working on the device.
- Wear suitable personal protective equipment for all work on the product.

NOTICE

Damage to the inverter due to sand, dust and moisture

Sand, dust and moisture penetration can damage the inverter, thus impairing its functionality.

- Only open the inverter if the humidity is within the thresholds and the environment is free of sand and dust.
- Do not open the inverter during a dust storm or precipitation.

Procedure:

1. Disconnect the inverter from all voltage sources (see the inverter manual at www.SMA-Solar.com).
2. Remove the pan head screw shown.

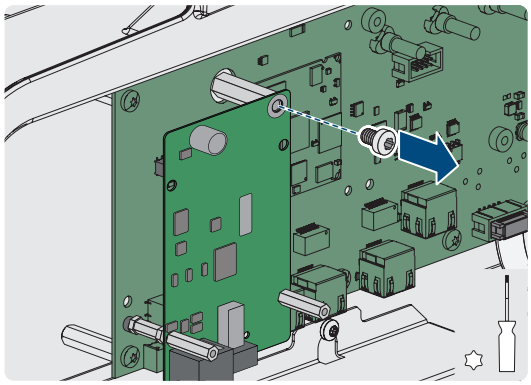

3. Remove the two plastic spacer bolts with internal threads.

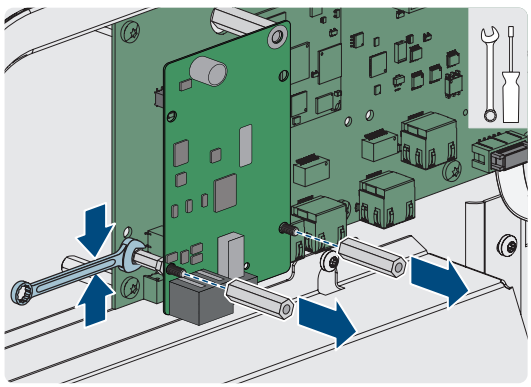

4. Remove the module from its slot by pulling it forwards.

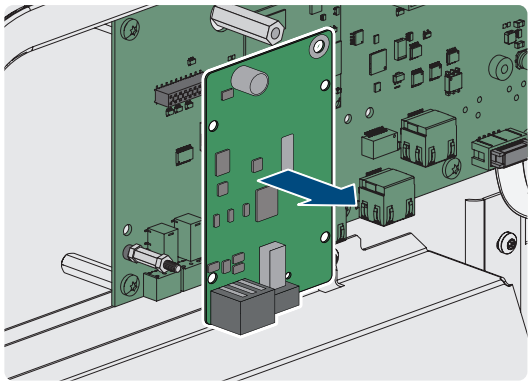

5. Remove the metal spacer bolt.

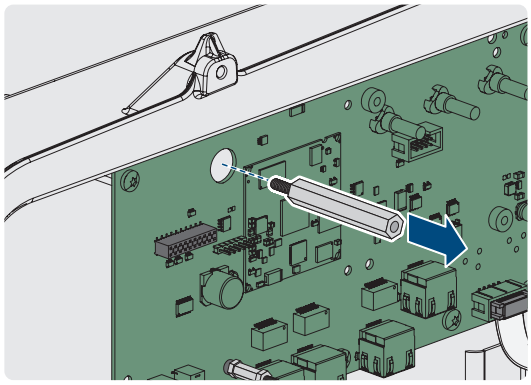

6. Remove the two plastic spacer bolts with external threads.

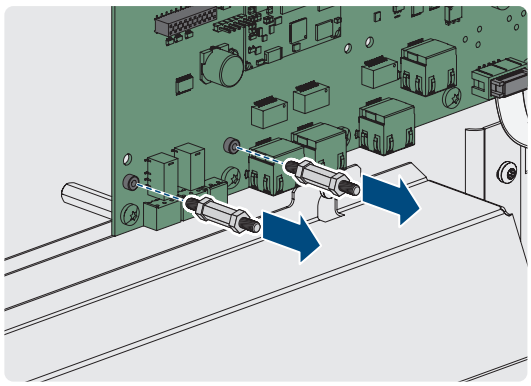

8.2 Removing the Module from STP 50-4x / STP 50-JP-40

⚠ DANGER

Danger to life due to electric shock when live components or cables of the inverter are touched

High voltages are present in the conductive components or cables of the inverter. Touching live parts and cables of the inverter results in death or lethal injuries due to electric shock.

- Disconnect the inverter from voltage sources and make sure it cannot be reconnected before working on the device.
- Wear suitable personal protective equipment for all work on the product.

NOTICE

Damage to the inverter due to sand, dust and moisture

Sand, dust and moisture penetration can damage the inverter, thus impairing its functionality.

- Only open the inverter if the humidity is within the thresholds and the environment is free of sand and dust.
- Do not open the inverter during a dust storm or precipitation.

Procedure:

1. Disconnect the inverter from voltage sources.
2. Remove the enclosure lid of the DC Connection Unit. Unscrew all screws with a Torx screwdriver (TX25) and remove the enclosure lid carefully forward.
3. Set the screws and the enclosure lid aside and store safely.
4. Remove all connecting terminal plates from the used connection sockets of the module.
5. Unscrew the fastening screw on the module using a Torx screwdriver (TX 25).

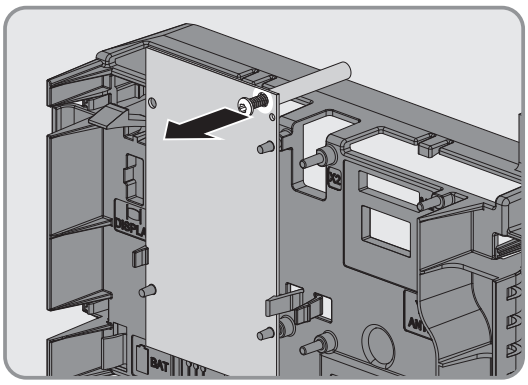

6. At the module, press the right or left locking tab of the communication assembly slightly outwards and pull the module slightly forwards holding the lower end until the module is released from the interlock of the locking tab.

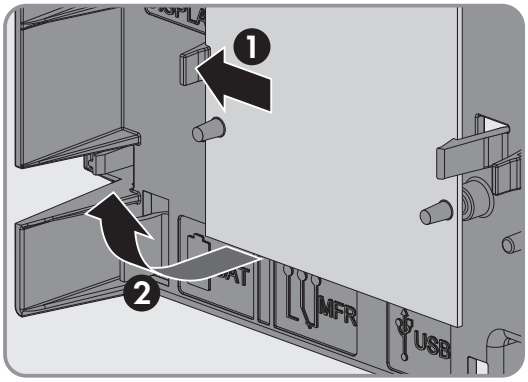

7. Hold the module with one hand and press the second locking tab slightly outwards with the other hand. Pull the module slightly forwards on the lower end until the module is released from the interlock of the locking tab.

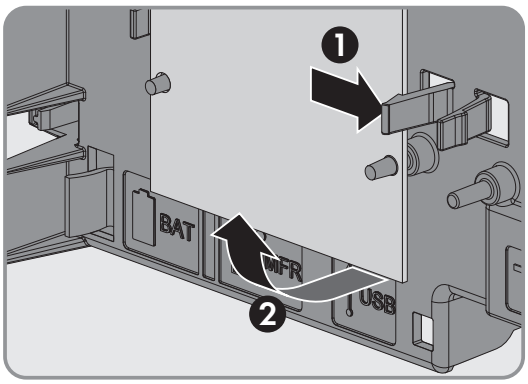

8. Remove the module from its slot by pulling it forwards.
9. Remove the swivel nut from the cable gland for the communication cable.
10. Lead the connection cable out of the two-hole cable support sleeve.
11. Lead the connection cable out of the swivel nut.
12. Close unused enclosure openings of the two-hole cable support sleeve with sealing plugs.
13. Press the cable support sleeve into the two-hole cable gland.
14. Tighten the swivel nut on the cable gland hand-tight.
15. Close the inverter and, if necessary, recommission it (see inverter manual).

8.3 Packing the Product for Shipment

- Pack the product for shipping. Use the original packaging or packaging that is suitable for the weight and size of the product.

8.4 Disposing of the Product

- Dispose of the product in accordance with the locally applicable disposal regulations for electronic waste.

9 Technical Data

General data

Mounting location	In the inverter
Voltage supply	Via the inverter

Mechanical data

Width x height x depth	60 mm x 105 mm x 33 mm

Ambient Conditions for Storage/Transport

Ambient temperature	-40°C to +70°C
Relative humidity, non-condensing	10% to 100%
Maximum height above mean sea level	3000 m

Digital inputs

Quantity	6
Input voltage	24 V_{DC}
Cutoff frequency	30 Hz
Maximum cable length	200 m

Digital outputs (multifunction relay)

Quantity	3
Execution	Potential-free relay contacts
Maximum switching voltage	30 V_{DC}
Maximum switching current	1 A
Minimum switching current	10 mA
Minimum electrical endurance when the maximum switching voltage and maximum switching current are complied with	100000 switching cycles
Bounce time	5 ms
Reset time	5 ms
Maximum cable length	200 m

10 EU Declaration of Conformity

within the scope of the EU directives

CE

- Electromagnetic compatibility 2014/30/EU (29.3.2014 L 96/79-106) (EMC)

SMA Solar Technology AG confirms herewith that the products described in this document are in compliance with the fundamental requirements and other relevant provisions of the aforementioned directives. More information on the availability of the entire Declaration of Conformity can be found at https://www.sma.de/en/ce-ukca.

11 Contact

If you have technical problems with our products, please contact the SMA Service Line. The following data is required in order to provide you with the necessary assistance:

- Inverter:
  - Device type
  - Serial number
  - Firmware version
  - Special country-specific settings (if available)
  - Information on the ripple control receiver
  - Information on the grid and PV system protection
  - Operating mode of the multifunction relay
  - Detailed description of the problem
- Sunny Portal:
  - System name in Sunny Portal
  - Access data for Sunny Portal

You can find your country's contact information at:



https://go.sma.de/service

ENERGY
THAT
CHANGES

SMA

www.SMA-Solar.com