Operating Manual

SUNNY HOME MANAGER 2.0

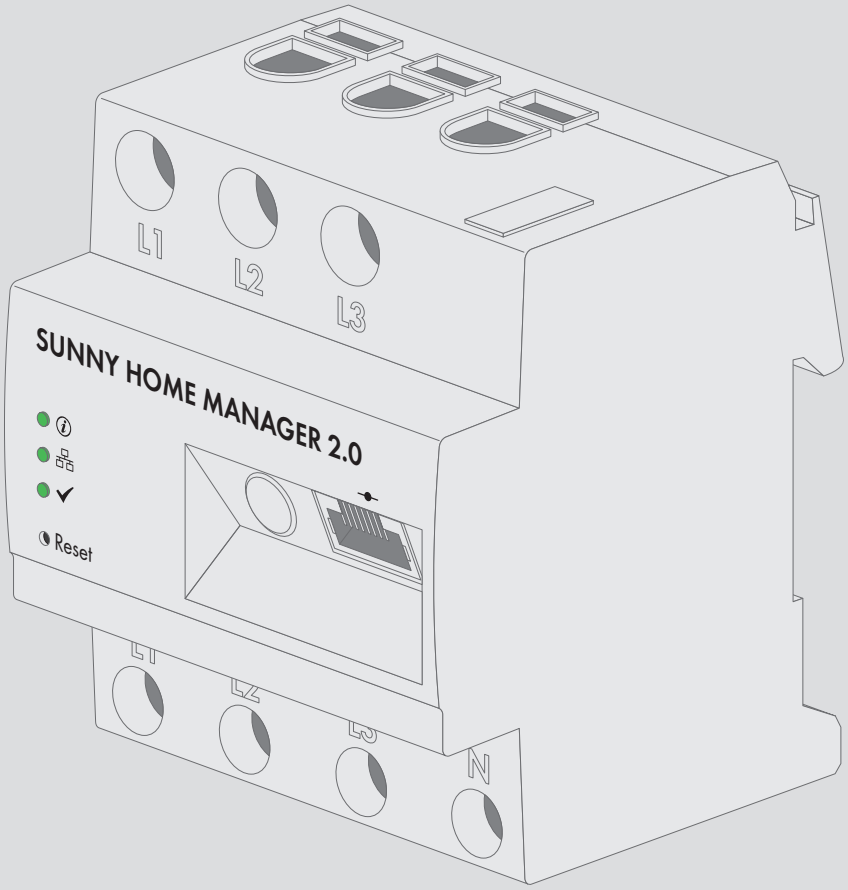

Legal Provisions

The information contained in these documents is property of SMA Solar Technology AG. Any publication, whether in whole or in part, requires prior written approval by SMA Solar Technology AG. Internal reproduction used solely for the purpose of product evaluation or other proper use is allowed and does not require prior approval.

SMA Warranty

You can download the current warranty conditions from the Internet at www.SMA-Solar.com.

Software licenses

The software licenses for the installed software modules are contained in the Sunny Home Manager software. Upon connection of the Sunny Home Manager with a web browser, you will find the licenses at the following address: http://IP_address/legal_notices.txt. The IP address (e.g. 192.168.1.120) will be assigned by your router for the Sunny Home Manager. You will find further information on determining the IP address in your router documentation.

Trademarks

All trademarks are recognized, even if not explicitly identified as such. Missing designations do not mean that a product or brand is not a registered trademark.

Modbus® is a registered trademark of Schneider Electric and is licensed by the Modbus Organization, Inc.

QR Code is a registered trademark of DENSO WAVE INCORPORATED.

Phillips® and Pozidriv® are registered trademarks of Phillips Screw Company.

Torx® is a registered trademark of Acument Global Technologies, Inc.

SMA Solar Technology AG

Sonnenallee 1

34266 Niestetal

Germany

Tel. +49 561 9522-0

Fax +49 561 9522-100

www.SMA.de

Email: info@SMA.de

Status: 7/4/2017

Copyright © 2017 SMA Solar Technology AG. All rights reserved.

Table of Contents

1 Information on this Document 7
1.1 Validity 7
1.2 Target Group 7
1.3 Additional Information 7
1.4 Symbols 7
1.5 Nomenclature 8
1.6 Typographies 8
2 Safety 9
2.1 Intended Use 9
2.2 Safety Information 10
2.3 Supported Products 11
3 Scope of Delivery 16
4 Product Description 17
4.1 Sunny Home Manager 17
4.1.1 Functions 17
4.1.2 Type Label 20
4.1.3 LEDs 21
4.1.4 System Requirements 21
4.2 Radio-controlled socket 22
4.2.1 Functions 22
4.3 Home appliances with intelligent communication interface 23
4.4 System Structure 24
5 Mounting 26
5.1 Requirements for Mounting the Sunny Home Manager 26
5.2 Mounting the Sunny Home Manager on the Top-Hat Rail 26
6 Connection 27
6.1 Voltage supply terminal 27
6.1.1 Requirements for connecting the voltage supply 27
6.1.2 Connecting the Voltage Supply for Applications up to 63 A 28
6.1.3 Connecting the Voltage Supply for Applications greater than 63 A 29
6.2 Preparing for Speedwire Communication 30
6.3 Connecting the Sunny Home Manager to the Router 31
6.4 Establish communication between Sunny Home Manager and SMA Energy Meter 31
6.5 Replacing the SMA Energy Meter 31
6.6 Connecting a Smart Appliance 31
7 Commissioning 33
7.1 Testing the Connection to Sunny Portal 33
7.2 Registering in Sunny Portal 33
7.3 Logging In and Out of Sunny Portal 38
8 Accessing the User Interface of the Sunny Home Manager System 39
9 Page and Menu Selection 40
9.1 System Selection and System List 40
9.2 My Sunny Home Manager System 40

9.2.1 PV System Profile ... 40
9.2.2 Current Status And Forecast ... 41
9.2.3 Energy Balance ... 45
9.2.4 Load Balance and Control ... 51
9.2.5 Energy and Power ... 52
9.2.6 Annual Comparison ... 53
9.2.7 System Monitoring ... 53
9.2.8 PV System Logbook ... 55
9.3 Analysis ... 56
9.4 Performance Ratio ... 58
9.5 System Report ... 59
9.6 Devices ... 59
9.7 Configuration ... 59
9.7.1 System Properties ... 59
9.7.2 System Presentation ... 60
9.7.3 Device Overview ... 60
9.7.4 Load Overview and Planning ... 61
9.7.5 Report Configuration ... 62
9.7.6 User Management ... 62

10 Page Settings ... 63
10.1 Diagram Settings ... 63
10.1.1 Setting the Display Period ... 63
10.1.2 Saving Diagram Data ... 63
10.1.3 Printing Diagram Data ... 63
10.1.4 Enlarging the View ... 63
10.1.5 Showing and Hiding the Legend ... 63
10.2 Sorting the System List ... 64
10.3 Showing, Hiding and Sorting Loads ... 64
10.4 Publishing Pages ... 64
10.4.1 Releasing Pages for Viewing in Sunny Portal ... 64
10.4.2 Presenting Sunny Portal Pages on the Internet ... 64

11 Device Settings ... 66
11.1 Filtering the Device Overview ... 66
11.2 Calling Up the Properties of a Device ... 66
11.3 Calling Up the Device Parameters ... 66
11.4 Updating Parameters ... 67
11.5 Reading Off the Software Package Version ... 67
11.6 Configuring the Energy Meter ... 67
11.7 Setting the Data Request Interval ... 68
11.8 Activating/Deactivating Automatic Software Updates ... 69
11.9 Entering Line Conductors ... 70
11.10 Entering the PV Array Power ... 70
11.11 Changing the Device Name ... 71
11.12 Changing a Device Description ... 71

12 Load Control ... 72
12.1 Information on Load Control ... 72
12.2 Configuring Radio-Controlled Sockets ... 72

12.2.1 Safety when Configuring Radio-controlled Sockets ... 72
12.2.2 Requirements when Configuring Radio-Controlled Sockets ... 73
12.2.3 Activating/Deactivating Data Collection ... 73
12.2.4 Selecting the Load ... 73
12.2.5 Entering the Device Name ... 74
12.2.6 Configuring the Operating Mode ... 74
12.3 Configuring Loads ... 75
12.3.1 Calling Up the Properties of a Load ... 75
12.3.2 Changing the Color Selection for Loads ... 75
12.3.3 Selecting the Load Icon ... 75
12.3.4 Selecting the Load Type ... 76
12.3.5 Selecting Program Controllability ... 76
12.3.6 Entering the Load Name ... 77
12.3.7 Entering the Power Consumption ... 77
12.3.8 Entering the Maximum Program Operating Time ... 77
12.3.9 Entering the Minimum Switch-On Time ... 78
12.3.10 Entering the Minimum Switch-Off Time ... 78
12.3.11 Assigning Radio-Controlled Sockets ... 78
12.3.12 Setting Measuring and Switching of the Radio-Controlled Socket ... 79
12.3.13 Setting Automatic Switch-Off ... 79
12.3.14 Setting the Priority of the Load ... 80
12.3.15 Configuring the Time Period ... 80
12.4 Directly Controlling Loads ... 82

13 System Management ... 84
13.1 Adding or Replacing Devices ... 84
13.2 Activating/Deactivating Devices ... 85
13.3 Replacing the Sunny Home Manager ... 85
13.4 Reassigning the Sunny Home Manager to the Sunny Portal System after the Reset ... 86
13.5 Deleting a Device from Sunny Portal ... 87
13.6 Deleting the Sunny Home Manager System ... 88

14 System Monitoring ... 89
14.1 PV System Monitoring Options ... 89
14.2 PV System Logbook ... 89
14.2.1 Calling Up and Filtering Messages ... 89
14.2.2 Confirming Messages ... 90
14.3 Reports ... 90
14.3.1 Report Overview ... 90
14.3.2 Configuring Reports ... 91
14.3.3 Creating a Report for a Specific Date ... 93
14.4 Setting Communication Monitoring ... 93
14.5 Setting the Inverter Comparison ... 94

15 System Settings ... 96
15.1 Entering String Properties ... 96
15.2 Changing System Data ... 97
15.3 Changing the System Name ... 97
15.4 Setting the Nominal PV System Power ... 98
15.4.1 Manually Entering the Nominal PV System Power ... 98
15.4.2 Automatic Calculation of Nominal PV System Power ... 98

15.5 Changing the System Description ... 99
15.6 Changing Operator Data ... 99
15.7 Changing/Deleting the System Image ... 99
15.8 Entering the Feed-in Tariff, Self-Consumption Tariff and Electricity Tariff ... 101
15.9 Configuring Limitation of Active Power Feed-In ... 102
15.10 Activating/Deactivating Grid Management Services ... 103
15.11 Setting the Optimization Target ... 103
15.12 Entering the Amount of CO2 Avoided ... 104
15.13 Automatic Calculation of the Predicted Annual Yield ... 104
15.14 Setting the Monthly Distribution of the Predicted Annual Yield ... 105
15.15 Editing Data Releases ... 106

16 User Management ... 107
16.1 User Groups and User Rights ... 107
16.2 Creating a New User ... 108
16.3 Deleting a User ... 108
16.4 Changing User Rights ... 109
16.5 Changing User Information ... 109

17 Password Information ... 110
17.1 Requirements for a Secure System Password ... 110
17.2 Required Passwords ... 110
17.3 Changing Passwords ... 110
17.4 Procedure in Case of Forgotten Passwords ... 111

18 Troubleshooting ... 112
18.1 States of All LEDs ... 112
18.2 Errors during Registration in Sunny Portal ... 112
18.3 Using the Sunny Home Manager Assistant ... 115
18.4 Error in the Sunny Home Manager Assistant ... 116
18.5 Resetting the Sunny Home Manager ... 116
18.6 Incomplete/Outdated/Faulty Data on the User Interface ... 116
18.7 Configuration of the Radio-Controlled Socket ... 119
18.8 Messages concerning Active Power Limitation in the System Logbook ... 120
18.9 Devices with Communication via Data Exchange Protocol ... 120

19 Decommissioning ... 123
19.1 Decommissioning the Sunny Home Manager ... 123
19.2 Packing the Product for Shipment ... 123
19.3 Disposing of the Product ... 123

20 Technical Data ... 124

21 Contact ... 126

1 Information on this Document

1.1 Validity

This document is valid for the device type "HM-20" (Sunny Home Manager 2.0) from firmware version 2.1.1.R.

1.2 Target Group

The tasks described in this document must only be performed by qualified persons. Qualified persons must have the following skills:

- Training in how to deal with the dangers and risks associated with installing and using electrical devices and installations
- Training in the installation and commissioning of electrical devices and installations
- Knowledge of the applicable standards and directives
- Knowledge of and compliance with this document and all safety information

1.3 Additional Information

Links to additional information can be found at www.SMA-Solar.com:

Document title and content	Document type
"SMA Smart Home"	Planning Guidelines
"SMA FLEXIBLE STORAGE SYSTEM" Increased Self-Consumption with Sunny Island and Sunny Home Manager	Quick Reference Guide
"SMA SMART HOME - Load Control via MUST Time Period - Example: Washing Machine"	Technical Information
"SMA SMART HOME - Load Control via CAN Time Period - Example: Pool Pump"	Technical Information
"SMA SMART HOME Load Control Using Relays or Contactors - Example: Heating Rod"	Technical Information
"SMA SMART HOME - Home appliance energy management using EEBus"	Technical Information
"SMA SMART HOME - Battery Charging Management with Time-of-Use Energy Tariffs"	Technical Information

1.4 Symbols

Symbol	Explanation
⚠ DANGER	Indicates a hazardous situation which, if not avoided, will result in death or serious injury
⚠ WARNING	Indicates a hazardous situation which, if not avoided, can result in death or serious injury
⚠ CAUTION	Indicates a hazardous situation which, if not avoided, can result in minor or moderate injury
NOTICE	Indicates a situation which, if not avoided, can result in property damage

Symbol	Explanation
i	Information that is important for a specific topic or goal, but is not safety-relevant
□	Indicates a requirement for meeting a specific goal
☑	Desired result
✖	A problem that might occur

1.5 Nomenclature

Complete designation	Designation in this document
Sunny Home Manager 2.0	Sunny Home Manager, product

1.6 Typographies

Typography	Use	Example
bold	• Display texts • Elements on a user interface • Terminals • Elements to be selected • Elements to be entered	• The value can be found in the field **Energy**. • Select **Settings**. • Enter **10** in the field **Minutes**.
>	• Connects several elements to be selected	• Select **Settings > Date**.
[**Button**] [**Key**]	• Button or key to be selected or pressed	• Select [**Next**].

2 Safety

2.1 Intended Use

Sunny Home Manager

The Sunny Home Manager is the central device responsible for energy management in households with a PV system for self-consumption. The Sunny Home Manager carries out the following basic tasks:

- Collection of energy- and power measured values in the interconnected household
- Energy monitoring: Presentation of energy flows via Sunny Portal
- Energy management: Automatic control of interconnected household loads with the aim of energy efficiency optimization
- Dynamic limiting of the active power feed-in
- Active power measurement via integrated measuring unit with direct connection up to 63 A limiting current
- Use of current transformers necessary for applications above 63 A
- Interconnection of loads via EEBus and SEMP
- Support of the smart plug switches Edimax SP-2101W to firmware version 2.08 and Edimax SP-2101W V2 from firmware version 1.00

The Sunny Home Manager 2.0 does not support S0 or D0 energy meters, Plugwise products or Miele@home devices. The Sunny Home Manager is not equipped with a BLUETOOTH interface. The Sunny Home Manager is not an energy meter for power consumption in the sense of the EU directive 2004/22/EG (MID). The Sunny Home Manager may not be used for billing purposes. The data collected by the Sunny Home Manager relating to the power generated by your PV system may deviate from the data of the main energy meter, which is used for billing purposes.

The Sunny Home Manager may only be connected to the subdistribution of the household on the load side behind the energy meter of the electric utility company. The Sunny Home Manager must be installed in a switch cabinet.

It is possible to use the Sunny Home Manager in delta IT grids. When using the Sunny Home Manager in delta IT grids, the cumulative power values are correctly measured. Due to the measuring principle of the Sunny Home Manager, other measured values may be incorrect.

The Sunny Home Manager is approved for use in all EU member states and Australia.

Use this product only in accordance with the information provided in the enclosed documentation and with the locally applicable standards and directives. Any other application may cause personal injury or property damage.

Alterations to the product, e.g. changes or modifications, are only permitted with the express written permission of SMA Solar Technology AG. Unauthorized alterations will void guarantee and warranty claims and in most cases terminate the operating license. SMA Solar Technology AG shall not be held liable for any damage caused by such changes.

Any use of the product other than that described in the Intended Use section does not qualify as the intended use.

The enclosed documentation is an integral part of this product. Keep the documentation in a convenient place for future reference and observe all instructions contained therein.

The type label must remain permanently attached to the product.

Sunny Portal

Sunny Portal serves as the user interface for configuring the Sunny Home Manager and the loads. Sunny Portal transmits the configurations to the Sunny Home Manager. The Sunny Home Manager transmits the configuration to the radio-controlled sockets. In this way, the loads are able to be switched on and off via Sunny Portal.

Sunny Portal (www.SunnyPortal.com) is an Internet portal which allows you to monitor systems and to visualize and present system data.

Sunny Portal visualizes data and energy balances of selected loads in the household.

Sunny Portal visualizes data from components of the SMA Smart Home, the SMA Flexible Storage System and the SMA Integrated Storage System. In addition, data from battery management systems can be displayed in clearly arranged diagrams.

2.2 Safety Information

This section contains safety information that must be observed at all times when working on or with the product.

To prevent personal injury and property damage and to ensure long-term operation of the product, read this section carefully and observe all safety information at all times.

⚠ DANGER

Danger to life due to electric shock if external disconnect switch is missing

Lethal voltages are present in the live components.

- Install an external disconnect switch between the product and the grid-connection point. The external disconnector must be close to the product and easily accessible.

⚠ DANGER

Danger to life due to electric shock

Lethal voltages are present in the live components.

- Disconnect the connection point from voltage sources and make sure it cannot be reconnected.
- Before performing any work on the product, disconnect the grid side from all voltage sources using the installed disconnect switch.
- Ensure that the conductors to be connected are de-energized.
- Only use the product in a dry environment and keep it away from moisture.
- Install the product in the switch cabinet only and ensure that the connection areas for the line conductors and the neutral conductor are behind a cover or have contact protection.
- Disconnect the product from voltage sources before cleaning and clean it with a dry cloth only.
- Observe the prescribed minimum clearance between the network cable and live installation components, or use suitable insulation.

⚠ WARNING

Danger of fire due to missing or incorrect fuse

If a fuse is missing or incorrect and a fault occurs, a fire may be caused. This can result in death or serious injury.

- Protect the line conductors of the product with a fuse or a selective circuit breaker with max. 63 A.

⚠ WARNING

Danger to life by switching medical devices

Unintentional switching of medical devices can result in life-threatening situations.

- Do not connect any medical devices to the radio-controlled socket.

⚠ WARNING

Risk of injury and fire due to unintentional and unattended switching on of loads

Loads that are switched on via a radio-controlled socket unintentionally and while unattended can cause injuries and fires (e.g. an iron).

- Do not connect any loads to the radio-controlled socket that could endanger persons or cause damage if unintentionally switched on.

NOTICE

Damage to loads

Frequently switching a load on and off can damage it.

- Ask the load manufacturer whether the load is suitable for control via a radio-controlled socket.
- Configure the radio-controlled socket so that the load connected is not switched on or off more frequently than specified by the load manufacturer.
- Do not connect any loads to the radio-controlled socket if they require a continuous current supply.

NOTICE

Damage to the product due to moisture

The product is not splash-proof (IP20). Moisture can penetrate the product and damage it.

- Only use the product in a dry, indoor environment.

NOTICE

Damage to the product due to condensation

If the product is moved from a cold environment to a warm environment, condensation may form in the product.

- When there is a large temperature difference, wait for the product to reach room temperature before connecting to the voltage supply.
- Make sure the product is dry.

2.3 Supported Products

Maximum Number of Devices

The Sunny Home Manager supports a **maximum of 24 devices**.

The term device includes all components that exchange data with the Sunny Home Manager, i.e. SMA inverters, radio-controlled sockets, and smart loads. The SMA Energy Meter is not included in these devices.

Of the 24 devices, a maximum of 12 devices may be actively controlled by the Sunny Home Manager. Actively controlled means that the Sunny Home Manager not only displays the consumption of the device, but actively switches the device. Even if the limit of a maximum of 12 devices is reached, further devices can be monitored via radio-controlled sockets and visualized, so long as the maximum number of devices of 24 is not exceeded.

Example of a fully equipped energy management system:

A fully equipped energy management system (with a maximum of 24 devices) can consist of the following components:

- 3 x SMA Inverters
- 1 x heat pump that is controlled by the Sunny Home Manager via a direct data connection.
- 20 x radio-controlled sockets

  Due to the actively controlled heat pump, only eleven radio-controlled sockets can be actively controlled by the Sunny Home Manager.

SMA Inverters

Device type	From inverter firmware version
SB1.5-1VL-40	2.03.01.R
SB2.5-1VL-40	
SB 3600SE-10	2.3.35.R
SB 5000SE-10	
SB 3000TL-21	2.00.00.R*
SB 4000TL-21	
SB 5000TL-21	
SB 3600TL-21	
SB 2500TLST-21	2.00.27.R*
SB 3000TLST-21	
SB3.0-1AV-40	1.02.18.R
SB3.6-1AV-40	
SB4.0-1AV-40	
SB5.0-1AV-40	
SBS2.5-1VL-10	02.02.01.R
STP 8000TL-10	2.33.02.R*
STP 10000TL-10	
STP 12000TL-10	
STP 15000TL-10	
STP 17000TL-10	

Device type	From inverter firmware version
STP 15000TLEE-10	2.10.20.R
STP 20000TLEE-10	
STP 15000TLHE-10	
STP 20000TLHE-10	
STP 5000TL-20	2.00.15.R
STP 6000TL-20	
STP 7000TL-20	
STP 8000TL-20	
STP 9000TL-20	
STP 10000TL-20	
STP 12000TL-20	
Inverters with SMA Speedwire/Webconnect data module excluding inverters of type WB (Windy Boy)	1.00.00.R**
Inverters with SMA Speedwire/Webconnect Piggy-Back excluding inverters of type WB (Windy Boy)	
Sunny Island 6.0H-11 with SMA Speedwire data module for Sunny Island from firmware version 1.00.00.R	All
Sunny Island 8.0H-11 with SMA Speedwire data module for Sunny Island from firmware version 1.00.00.R	
Sunny Island 3.0M-11 with SMA Speedwire data module Sunny Island from firmware version 1.00.00.R	
Sunny Island 4.4M-11 with SMA Speedwire data module for Sunny Island from firmware version 1.00.00.R	

* This firmware version is the minimum requirement for the function **Limiting of the active power feed-in**.

** A list of these inverters can be found in the BLUETOOTH Piggy-Back documentation. The inverters supporting the function "Limitation of active power feed-in" are listed in the Planning Guidelines "Power Reducer Box – Compatibility List".

No support for the Sunny Boy 240 and the Sunny Multigate

The Sunny Boy 240 and the Sunny Multigate are not intended for use in Sunny Home Manager systems. Although the Sunny Home Manager can detect the Sunny Multigate, use of the Sunny Home Manager for the configuration of this inverter is not recommended. SMA Solar Technology AG does not accept liability for missing or incorrect data and any yield losses that may result.

The SMA Com Gateway is not supported.

The SMA Com Gateway is not intended for use with the Sunny Home Manager. SMA Solar Technology AG does not accept liability for missing or incorrect data and any yield losses that may result.

Other SMA Devices

- SMA Energy Meter

SMA Software

- SMA Connection Assist (available free of charge in the download area at www.SMA-Solar.com).
- Home Manager Assistant (available free of charge in the download area at www.SMA-Solar.com).

Further compatible devices

- Smart plug switches Edimax SP-2101W with firmware version 2.08 and Edimax SP-2101W V2 from firmware version 1.00
- Home appliances with EEBus interface (see technical information "SMA SMART HOME - Home appliance energy management using EEBus")
- Home appliances with SEMP interface (see planning guidelines "SMA Smart Home")

Devices from Other Manufacturers

Inverters

Inverters from other manufacturers can be integrated in PV systems with Sunny Home Manager provided that the following requirements are met:

☐ The power output of the inverters must be captured via a separate SMA Energy Meter or the integrated measuring device of the Sunny Home Manager.

☐ The SMA Energy Meter or the integrated measuring device of the Sunny Home Manager must be configured in Sunny Portal as a PV production meter (for information on the configuration of energy meters, see the user manual "Sunny Home Manager in Sunny Portal").

☐ In hybrid systems with SMA inverters and inverters from other manufacturers, the PV production meter must measure the joint power of **all** inverters taken together. As soon as you have registered and configured a PV production meter in the Sunny Home Manager system, the Sunny Home Manager will no longer query the power data of the SMA inverters directly from the inverters via Speedwire, but will receive the power data from the PV production meter.

Monitoring of the PV system and the dynamic limitation of the active power fed into the utility grid are **not** possible with inverters from other manufacturers. In this case, verify whether operation of the PV system without dynamic active power limitation is permitted in the given country, or whether dynamic active power limitation can be performed independently by the inverter itself.

Energy meter

For the output measurement at the grid-connection point:

- Integrated measuring device of the Sunny Home Manager

For a separate PV generation measurement:

- SMA Energy Meter

Router

SMA Solar Technology AG recommends the use of a router that supports DHCP. Should problems occur while registering in the network, SMA Solar Technology AG recommends the "Home Manager Assistant" software (available free of charge in the download area at www.SMA-Solar.com).

All network components used must support the IGMP protocol, minimum version 3 (IGMPv3).

Other Devices

The following devices can be controlled via a radio-controlled socket. Suitable load profiles are already available for these devices in Sunny Portal.

- Heat pump Stiebel Eltron WWK 300
- Heat pump Tecalor TTA 300

The load profiles apply to all devices of the Stiebel Eltron WWK electronic range and the Tecalor TTA electronic range. Refer to the manufacturer manual for information on how to connect the devices.

3 Scope of Delivery

Check the scope of delivery for completeness and any externally visible damage. Contact your distributor if the scope of delivery is incomplete or damaged.

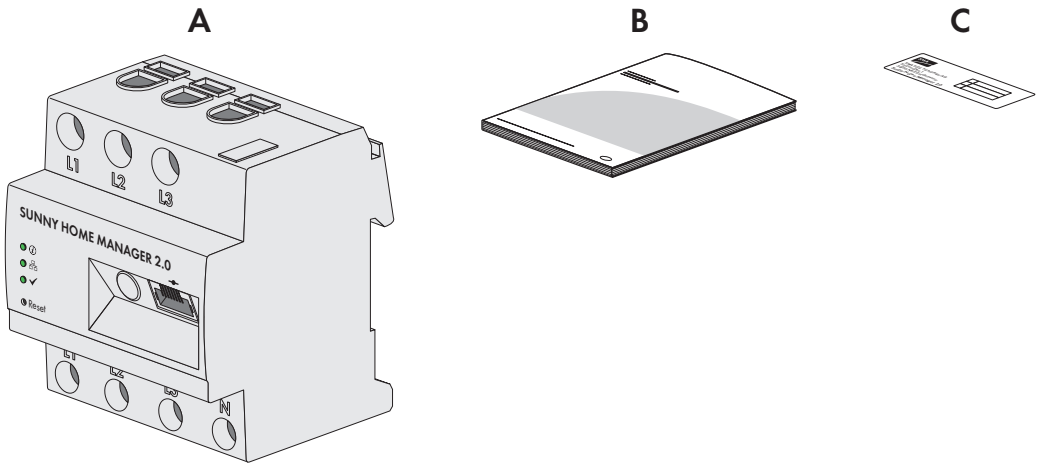

Figure 1: Components included in the scope of delivery

Position	Quantity	Designation
A	1	Sunny Home Manager
B	1	Quick reference guide for commissioning
C	1	Label with serial number (SN), registration ID (RID) and identification key (PIC) for registration of the device in the setup assistant for the Sunny Portal

4 Product Description

4.1 Sunny Home Manager

4.1.1 Functions

The Sunny Home Manager is the central device responsible for energy management in households with a PV system for self-consumption. The Sunny Home Manager carries out the following basic tasks:

- Collection of energy- and power measured values in the interconnected household
- Energy monitoring: Presentation of energy flows via Sunny Portal
- Energy management: Automatic control of interconnected household loads with the aim of energy efficiency optimization
- Dynamic limiting of the active power feed-in
- Active power measurement via integrated measuring unit with direct connection up to 63 A limiting current
- Use of current transformers necessary for applications above 63 A
- Interconnection of loads via EEBus and SEMP
- Support of the smart plug switches Edimax SP-2101W to firmware version 2.08 and Edimax SP-2101W V2 from firmware version 1.00

Device Overview

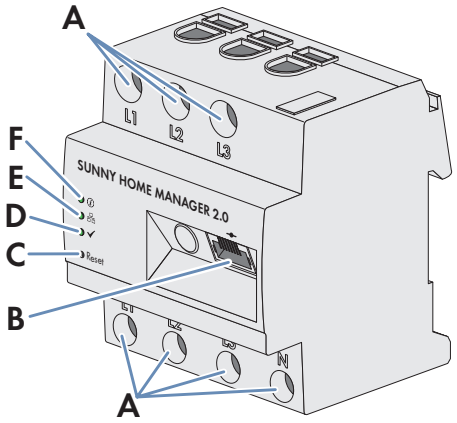

Figure 2: Sunny Home Manager 2.0

Position	Designation
A	Connection area for line conductors and neutral conductor
B	Network connection (Ethernet)
C	Reset button
D	Performance LED
E	COM LED
F	Status LED

Symbols on the Sunny Home Manager

Symbol	Explanation
Reset	Reset button
—•—	Ethernet

Readout of energy meter data and data from SMA devices with Speedwire communication interface and from compatible radio-controlled sockets/radio-controlled switches

The Sunny Home Manager reads out the data of the connected energy meters and SMA devices.

The Sunny Home Manager controls the radio-controlled sockets, which are registered in the local network.

The Sunny Home Manager can manage and control several inverters with Speedwire as one PV system.

The Sunny Home Manager establishes the connection to Speedwire devices, home loads with direct data connection and radio-controlled sockets via a router/network switch in the local network.

SMA inverters are either fitted with Speedwire ex works or can be retrofitted accordingly (see product page of the respective inverter at www.SMA-Solar.com).

PV System Monitoring and Parameterization via Sunny Portal

Sunny Portal serves as the user interface of the Sunny Home Manager. The Sunny Home Manager establishes the Internet connection to Sunny Portal via a router and sends the read-out data to Sunny Portal.

Using Sunny Portal, the Sunny Home Manager enables monitoring of the system, a display of the PV energy available over the course of the day, and a live display of all energy flows in the household. Taking the different electricity prices into account, the Sunny Home Manager uses this to derive recommendations for the prudent use of electrical energy.

Support for increased self-consumption

Self-consumption means that the PV power is consumed at the site where it is generated.

In every household, there is "natural" self-consumption, because loads (e.g. oven) are in operation while PV power is being produced and because certain loads continuously consume current (e.g. refrigerator, devices in standby mode). If the PV system produces a lot of PV power, it is possible that only a part of that PV power will be self-consumed. The excess PV power is fed into the utility grid.

A higher self-consumption quota can be achieved if loads are specifically switched on when excess PV power is available.

The following functions of the Sunny Home Manager make it possible to increase the self-consumption quota:

Function	Explanation
Creation of a PV yield forecast	The Sunny Home Manager continuously logs the energy generated by the PV system. The Sunny Home Manager also receives location-based weather forecasts via the Internet. Based on this information, the Sunny Home Manager creates a PV yield forecast for the PV system.
Creation of a load profile	The Sunny Home Manager logs data on PV generation, grid feed-in and purchased electricity. Based on PV generation, grid feed-in and purchased electricity, the Sunny Home Manager determines how much energy is typically consumed at which times and uses this to create a load profile for the household. This load profile can be different for each day of the week. The Sunny Home Manger receives the measured data for PV generation, grid feed-in and purchased electricity via the installed SMA Energy Meter, the integrated measuring device or from the inverters directly via the data connection.

Function	Explanation
Control of radio-controlled sockets	Specific loads connected to radio-controlled sockets can be switched on and off by the Sunny Home Manager. The Sunny Home Manager uses the yield forecast and the load profile to determine favorable time periods for optimization of internal power supply and self-consumption. In accordance with the PV system operator's specifications and taking the determined time periods into account, the Sunny Home Manager controls the switching on and -off of the loads. Furthermore, radio-controlled sockets provide the option of individually monitoring and recording the energy consumption of loads.
Direct control of devices via a data exchange protocol	The Sunny Home Manager can control devices using a data exchange protocol defined by SMA Solar Technology AG by communicating with the devices either directly or via an appropriate gateway using Ethernet. The device reports its energy demand to the Sunny Home Manager and the Sunny Home Manager allocates the available energy to the device taking the PV yield forecast and the consumption forecast into account. You can find out whether the data exchange protocol used by the device is supported by the Sunny Home Manager in the device documentation or from the device manufacturer.
When used with SMA battery inverters: prevention of derating losses	The Sunny Home Manager prevents derating losses which can arise due to the limitation of active power feed-in. Taking the PV yield forecast and the consumption forecast into account, the timing and duration of battery charging are controlled and the battery charge is optimized according to the available energy supply, if excess PV energy cannot otherwise be used.

Limitation of Active Power Feed-In

Local regulations, for example the Renewable Energy Sources Act (EEG) in Germany, can call for permanent limitation of active power feed-in for your PV system - that is, a limitation of the active power fed into the utility grid to a fixed amount or a percentage share of the installed nominal PV system power. If required, ask your grid operator whether a permanent limitation of the active power feed-in is necessary and whether you are allowed to use the Sunny Home Manager for this purpose (see the Manufacturer's Declaration "Feed-In Management in Accordance with the Renewable Energy Sources Act (EEG) 2012 with Sunny Home Manager (SHM) from SMA" available at www.SMA-Solar.com). Using an SMA Energy Meter, the Sunny Home Manager monitors the active power that is fed into the utility grid. If the active power feed-in exceeds the prescribed limit, the Sunny Home Manager limits the PV generation of the inverters accordingly.

The Sunny Home Manager avoids derating losses due to limitation of PV power generation by taking the current self-consumption of the household into account. The Sunny Home Manager helps to use excess PV power in households directly and increases the self-consumption quota as a result. For PV systems with SMA battery inverters, the Sunny Home Manager preferentially uses the derated active power to charge the battery.

Example: Limitation of the active power feed-in to 70% of the nominal PV system power

Due to high levels of solar irradiation, the system can currently produce 90% of the nominal PV system power.

- 20% of the nominal PV system power is currently being consumed by loads in the household. The remaining amount of 70% of the nominal PV system power is being fed into the utility grid.
  - ☑ No limitation of PV generation is required.
- A load is switched off and only 10% of the nominal PV system power is consumed in the household. As a result, 80% of the nominal system power is available for feed-in to the utility grid – more than allowed.
  - ☑ The Sunny Home Manager reduces PV generation from the theoretically possible 90% of nominal PV system power to 80%. 70% of the nominal PV system power continues to be fed into the utility grid.

Implementation of grid management services via Ethernet-based communication

As part of grid management services, it may be necessary to implement grid operator specifications for active power limitation and for reactive power feed-in (e.g. the active power feed-in of your PV system will be reduced in the event of grid overloads).

The Sunny Home Manager can implement specifications for grid management services that the grid operator sends to the Sunny Home Manager via Ethernet-based communication.

If required, ask your grid operator whether your PV system is required to implement grid management services.

4.1.2 Type Label

The type label clearly identifies the product. The type label is located on the side of the product. You can read off the following data from the type label:

- Assembly name
- Hardware version (Version)
- Serial number (SN)
- Registration ID (RID)
- Identification key (PIC)
- MAC address (MAC)

You will require the information on the type label to use the product safely and when seeking customer support from Service (see Section 21 "Contact", page 126).

Symbols on the Type Label

Symbol	Explanation
	RCM (Regulatory Compliance Mark) The product complies with the requirements of the applicable Australian standards.
	WEEE designation Do not dispose of the product together with the household waste but in accordance with the disposal regulations for electronic waste applicable at the installation site.
	Protection class II The product has a reinforced or double insulation between grid current circuit and output voltage.
	Qualified person The product may only be installed by a qualified person.
	Data matrix code 2D code for device-specific characteristics

4.1.3 LEDs

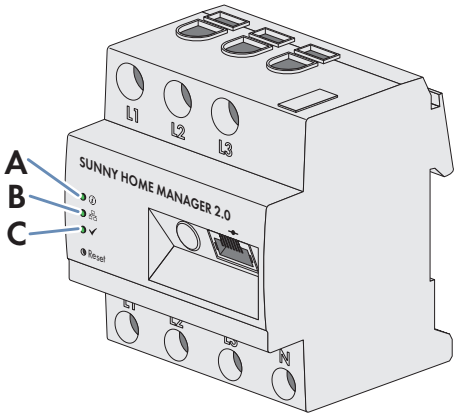

Figure 3: LEDs of the Sunny Home Manager 2.0

Position	LED symbol	Designation	Explanation
A		Status LED	Displays the operating state of the Sunny Home Manager (operation, startup process, error status)
B		COM LED	Displays the status of the Ethernet connection to the router
C		Performance LED	Displays the operating state, energy management, portal connection and error status.

4.1.4 System Requirements

Internet access requirements:

- Permanent Internet access (recommended: DSL access with flat rate)

Supported web browsers:

The Sunny Home Manager uses the Sunny Portal as an operating and visualization surface. Sunny Portal supports all major web browsers.

Recommended display resolution:

- Minimum 1024 pixels x 768 pixels

Operating systems supported by the Home Manager Assistant:

The Home Manager Assistant only has to be used with the Sunny Home Manager in exceptional cases. The following operating systems are supported by the Home Manager Assistant:

- Microsoft Windows 8
- Microsoft Windows 7
- Microsoft Windows Vista
- Linux with kernel from version 2.6.12, with Oracle Java Runtime Environment from version 6
- Apple OS X from version 10.6, with Java Runtime Environment from version 6

Energy meters:

The Sunny Home Manager has an integrated measuring device. A separate SMA Energy Meter can also be used for measuring.

SMA Solar Technology AG recommends using the integrated measuring device for measuring at the grid-connection point. Measuring occurs bi-directionally. Thus, the purchased electricity and grid feed-in can be measured.

For the function **Limiting of the active power feed-in**, at least one measurement at the grid-connection point is required. The Sunny Home Manager receives the PV generation data via the integrated measuring device or a separate SMA Energy Meter depending on the connection type and configuration.

Network cable requirements:

- Cable length between two nodes: max. 50 m with patch cable, max. 100 m with installation cable
- Cross-section: at least 2 x 2 x 0.22 mm² (2 x 2 x 24 AWG)
- Cable category: Cat5, Cat5e, Cat6, Cat6a, Cat7
- Cable shield: SF/UTP, S/UTP, SF/FTP, S/FTP
- Plug type: RJ45 of Cat5, Cat5e, Cat6, Cat6a

4.2 Radio-controlled socket

The Sunny Home Manager supports the following radio-controlled sockets:

- Smart plug switches Edimax SP-2101W to firmware version 2.03 and Edimax SP-2101W V2 from firmware version 1.00

Conflicts when controlling the smart plug switches

Besides being controlled by the Sunny Home Manager, the Edimax smart plug switches can be controlled in other ways (e.g. via the Edimax app). By simultaneously controlling the smart plug switches via the Sunny Home Manager and the Edimax app, conflicts can arise. This can result, for example, in the smart plug switches being switched on and off unintentionally.

4.2.1 Functions

The radio-controlled socket supports load control in households with Sunny Home Manager.

The radio-controlled socket carries out the following tasks:

- Implementation of Control Commands Issued by the Sunny Home Manager
- Measurement of the Energy Consumption of the Connected Load

Implementation of Control Commands Issued by the Sunny Home Manager

The Sunny Home Manager can switch the radio-controlled socket on and off. As a result, specific electrical devices can be switched on if e.g. a lot of PV power is available.

At which times the Sunny Home Manager switches the radio-controlled socket on or off depends on the configuration of the load and the current load planning configured in the Sunny Home Manager.

Measurement of the Energy Consumption of the Connected Load

The radio-controlled socket measures the energy consumption of the connected loads and transmits the measured values to the Sunny Home Manager. The Sunny Home Manager then transmits the values to Sunny Portal, where you can visualize and control the energy flows in the household. You can also register your system in the Sunny Places community portal and monitor your system, compare it with other systems and share knowledge and experiences with other PV system operators.

4.3 Home appliances with intelligent communication interface

The following home appliances have been fitted with the energy management data protocol and have been tested with SMA Smart Home:

- Stiebel Eltron heat pumps in conjunction with the Stiebel Eltron ISG web and the EMI software module (as of October 2016)

  Integral systems
  - LWZ 303/403 (Integral/SOL) from manufacture date 08/2008
  - LWZ 304/404 (SOL)
  - LWZ 304/404 Trend
  - LWZ 504

  Air/water heat pumps
  - WPL 10 I, IK, AC
  - WPL 13/20 A basic
  - WPL 13-23 E / cool
  - WPL 34/47/57
  - WPL 15/25 A(C)(S)

  Brine-water heat pumps
  - WPF 20-66 / HT
  - WPF 04-16 / cool
  - WPC 04-13 / cool
- Tecalor heat pumps in conjunction with ISG web and the EMI software module (as of October 2016)

  Integral systems
  - THZ 303/403 (Integral/SOL) from manufacture date 08/2008
  - THZ 304/404 (SOL)
  - THZ 304/404 Trend
  - THZ 504

  Air/water heat pumps
  - TTL 10 I, IK, AC
  - TTL 13/20 A basic
  - TTL 13-23 E / cool
  - TTL 34/47/57
  - TTL 15/25 A(C)(S)

  Brine-water heat pumps
  - TTF 10-16 M
  - TTF 20-66 / HT
  - TTF 04-16 / cool
  - TTC 04-13 / cool
- Mennekes AMTRON® wall boxes Xtra and Premium models as charging stations for electric vehicles
- Home appliances with EEBus interface (see technical information "SMA SMART HOME - Home appliance energy management using EEBus")

4.4 System Structure

The Sunny Home Manager has an integrated measuring device. Depending on the application, the Sunny Home Manager is integrated and configured differently in the system (see Section 7.2, page 33):

PV system with SMA inverters and measurement at the grid-connection point (recommended)

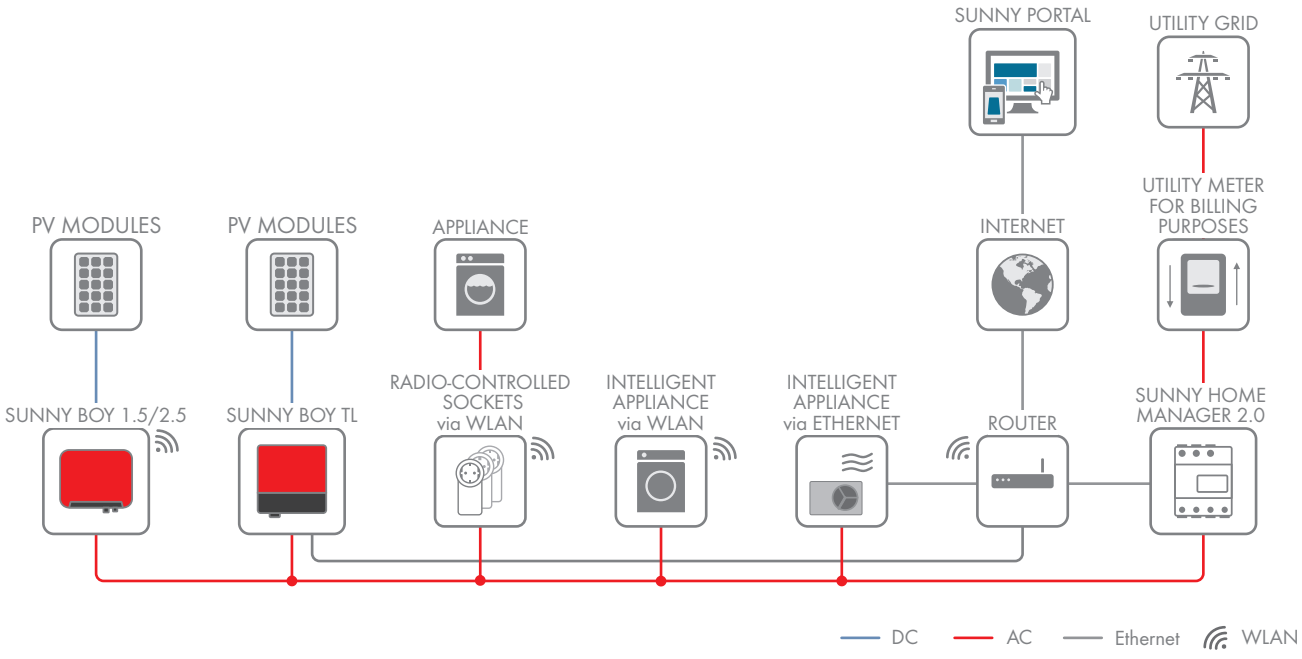

PV system with inverters of other manufacturers and measurement at the grid-connection point and the PV generation using a Sunny Home Manager and an SMA Energy Meter

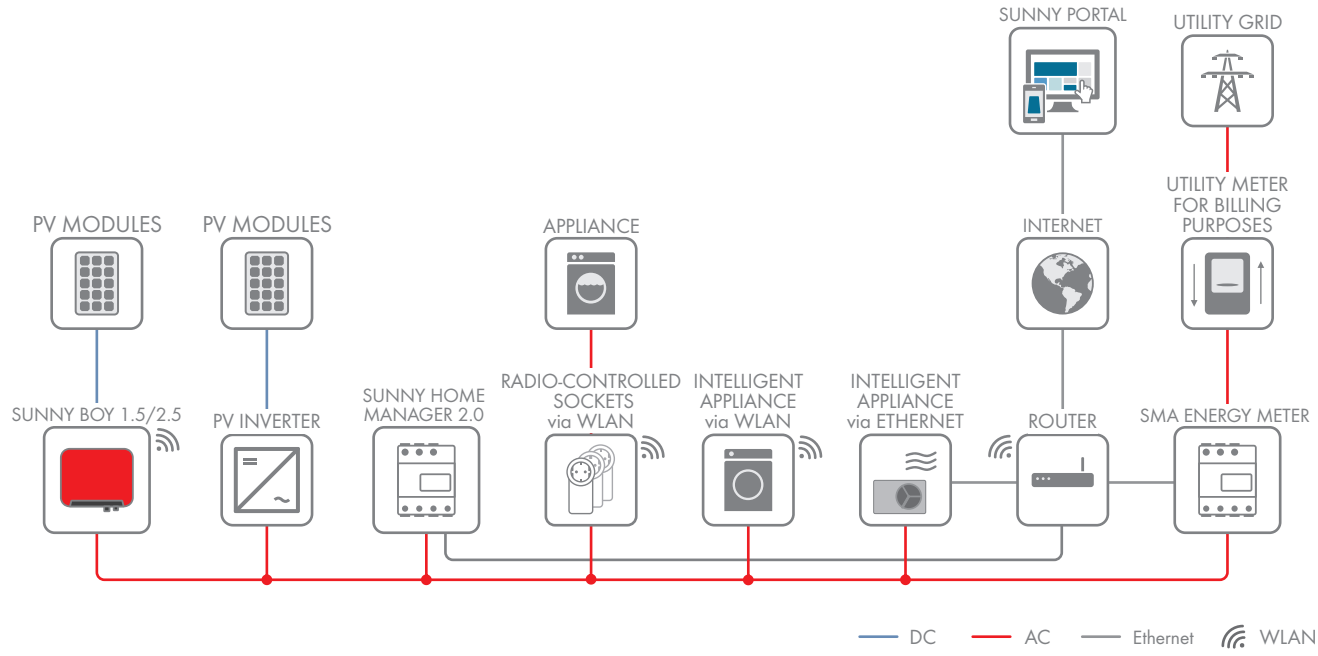

Sunny Home Manager without using the integrated measuring device

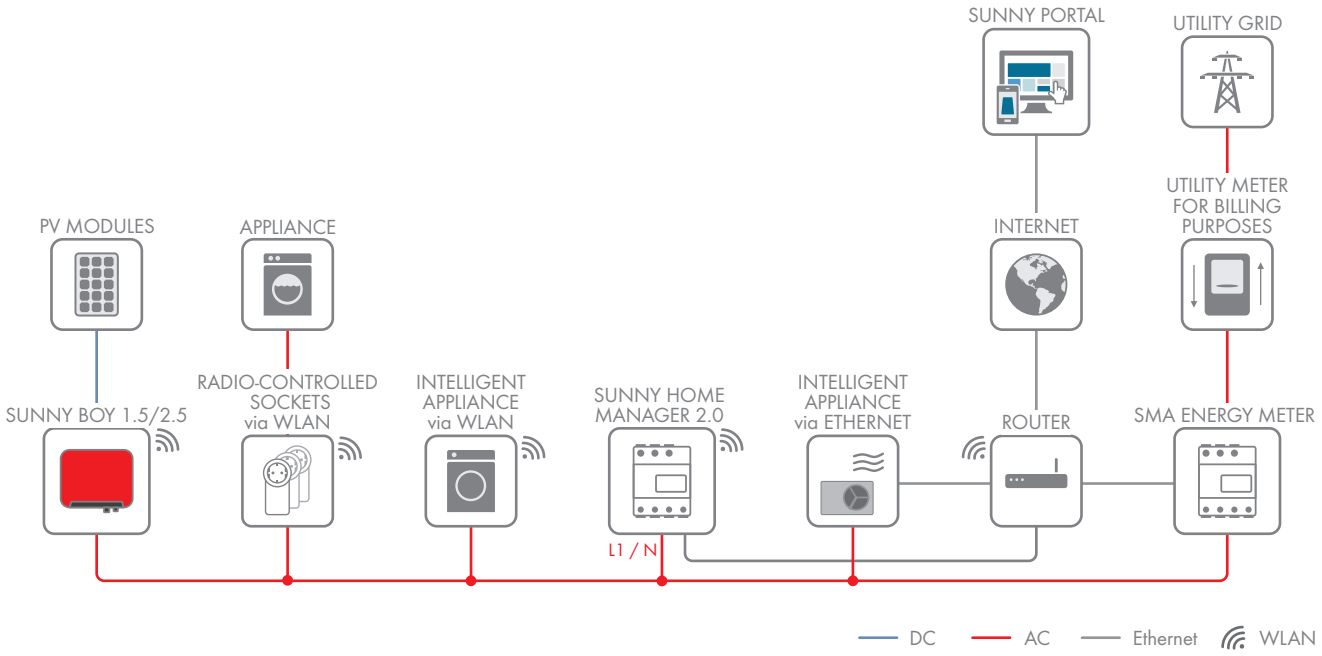

5 Mounting

5.1 Requirements for Mounting the Sunny Home Manager

- ☐ The mounting location must be indoors.
- ☐ The Sunny Home Manager must be installed in a switch cabinet.
- ☐ The mounting location must be protected against dust, moisture and corrosive substances.
- ☐ The cable route from the mounting location to the router must not exceed a maximum length of 100 m.
- ☐ A minimum distance of 1 m must be maintained from devices using the 2.4 GHz radio spectrum (e.g. WLAN devices, microwave ovens). This will prevent reduced connection quality and data transmission speed.
- ☐ The ambient conditions at the mounting location must be suitable for the operation of the Sunny Home Manager (see Section 20, page 124).

5.2 Mounting the Sunny Home Manager on the Top-Hat Rail

Requirement:

- ☐ The top-hat rail must be securely mounted in the switch cabinet.

Procedure:

1. Press the Sunny Home Manager with the upper retainers into the upper edge of the top-hat rail.

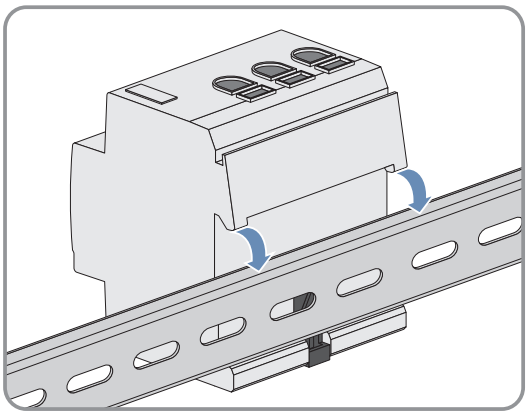

2. Hook the lower retainers into the lower edge of the top-hat rail.

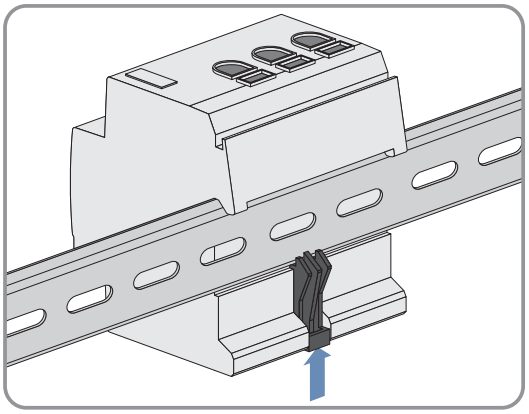

6 Connection

6.1 Voltage supply terminal

6.1.1 Requirements for connecting the voltage supply

⚠ DANGER

Danger to life due to electric shock if external disconnect switch is missing

Lethal voltages are present in the live components.

- Install an external disconnect switch between the product and the grid-connection point. The external disconnector must be close to the product and easily accessible.

⚠ DANGER

Danger to life due to electric shock

Lethal voltages are present in the live components.

- Disconnect the connection point from voltage sources and make sure it cannot be reconnected.
- Before performing any work on the product, disconnect the grid side from all voltage sources using the installed disconnect switch.
- Ensure that the conductors to be connected are de-energized.
- Only use the product in a dry environment and keep it away from moisture.
- Install the product in the switch cabinet only and ensure that the connection areas for the line conductors and the neutral conductor are behind a cover or have contact protection.
- Disconnect the product from voltage sources before cleaning and clean it with a dry cloth only.
- Observe the prescribed minimum clearance between the network cable and live installation components, or use suitable insulation.

Requirements:

☐ The setpoints of the electric utility company must be observed.

☐ At least the line conductor L1 and the neutral conductor must be connected. As a result, the Sunny Home Manager is supplied with voltage.

☐ When using fine stranded conductors, bootlace ferrules must be used.

Cable requirements:

☐ Conductor cross-section without current transformer:10 to 16 mm²

☐ Conductor cross-section with current transformer: see recommendations of the current transformer manufacturer

6.1.2 Connecting the Voltage Supply for Applications up to 63 A

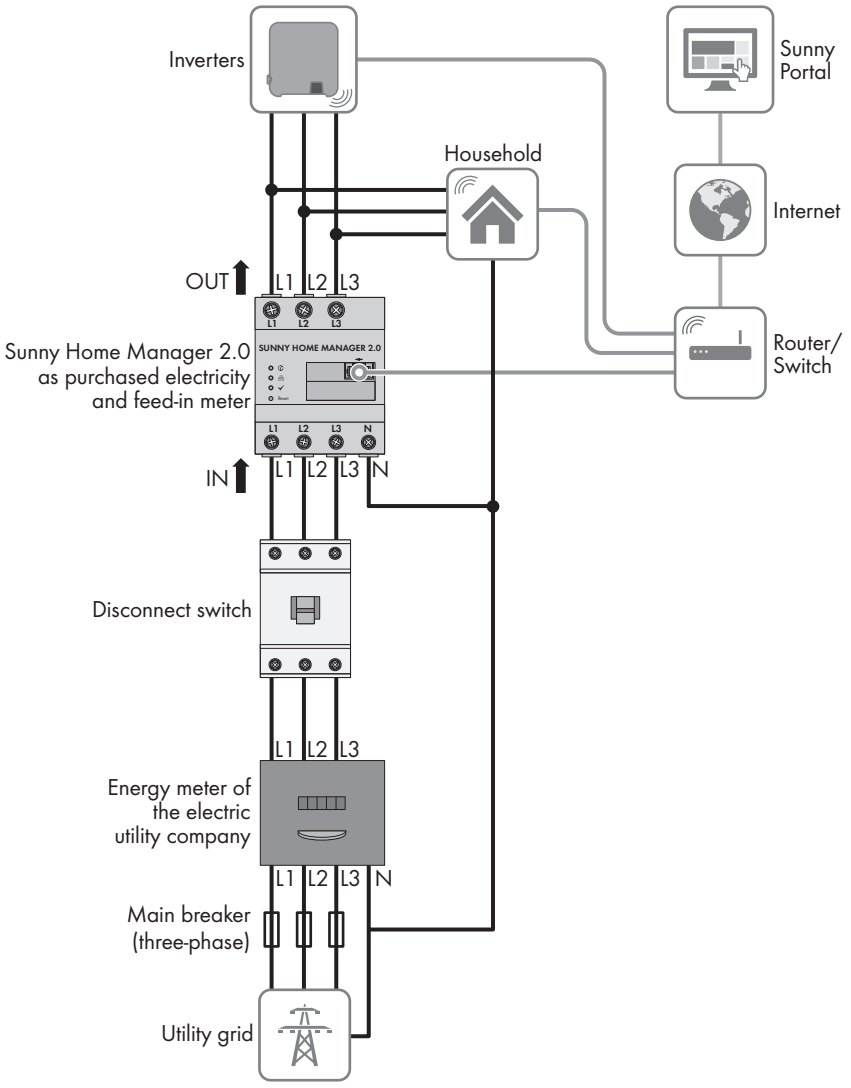

L1, **L2**, **L3**: Line conductor
N: Neutral conductor
OUT: Meter output, load side
IN: Meter input, grid side
— Ethernet
WLAN

Figure 4: The following figure shows a connection example in TN and TT utility grids in the case of installation at the grid-connection point when using the integrated measuring unit.

Procedure:

1. Disconnect the connection point from voltage sources and make sure it cannot be reconnected.
2. Connect the line conductors to the Sunny Home Manager:
   - When using the integrated measuring device and a three-phase utility grid, connect the line conductors L1, L2, L3 and N to the screw terminals at the input of the Sunny Home Manager. Open each screw terminal using a cross-head screwdriver, insert the conductor into the contact terminal and tighten the screw using a cross-head screwdriver (torque: 2.0 Nm).
   - When using the integrated measuring device and the single-phase utility grid, connect the line conductors L1 and N to the screw terminals at the input of the Sunny Home Manager. Open each screw terminal using a cross-head screwdriver, insert the conductor into the contact terminal and tighten the screw using a cross-head screwdriver (torque: 2.0 Nm).
   - When not using the integrated measuring device, connect the line conductor L1 and the neutral conductor to the screw terminals at the input of the Sunny Home Manager. Open each screw terminal using a cross-head screwdriver, insert the conductor into the contact terminal and tighten the screw using a cross-head screwdriver (torque: 2.0 Nm).

- When using the integrated measuring device for measuring the PV generation output, connect the Sunny Home Manager to the common connection point of all PV inverters in the household grid. An SMA Energy Meter must be installed at the grid-connection point for this.

3. Retighten the screw terminals after six to eight weeks (torque: 2.0 Nm).

6.1.3 Connecting the Voltage Supply for Applications greater than 63 A

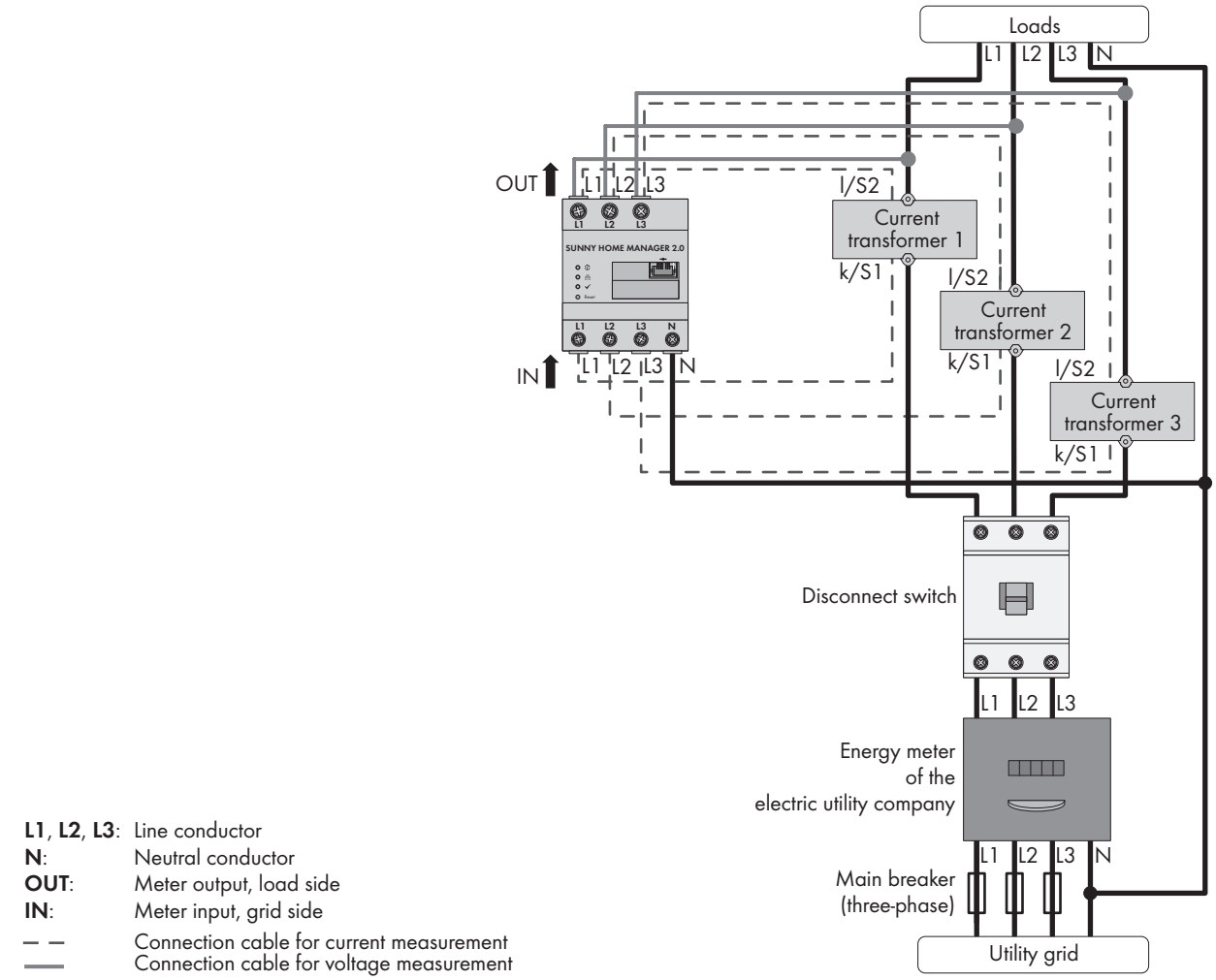

Figure 5: The following figure shows a connection example in TN and TT utility grids in the case of installation at the grid-connection point.

Additionally required material (not included in the scope of delivery):

☐ 3 x current transformers (SMA Solar Technology AG recommends current transformer for 5 A secondary current. The current transformers should have at least accuracy class 1.)

☐ Connection cables for current transformers

Procedure:

1. Disconnect the connection point from voltage sources and make sure it cannot be reconnected.
2. Connect one current transformer to each line conductor L1, L2 and L3.
3. On each current transformer, connect one connection cable for current measurement to each of the secondary current terminals (k/S1 and I/S2).
4. Connect the connection cables for current measurement (dashed gray line) to the screw terminals **L1**, **L2** and **L3** of the Sunny Home Manager. To do this, open each screw terminal using a cross-head screwdriver, insert the conductor into the contact terminal and tighten the screw using a cross-head screwdriver (torque: 2.0 Nm).

5. Connect the connection cables for voltage measurement (solid gray line) to the screw terminals **L1**, **L2** and **L3** at the output of the Sunny Home Manager. To do this, open each screw terminal using a cross-head screwdriver, insert the conductor into the contact terminal and tighten the screw using a cross-head screwdriver (torque: 2.0 Nm).
6. Connect the connection cables for voltage measurement L1, L2 and L3 (solid gray line) to the corresponding line conductors L1, L2 and L3.

6.2 Preparing for Speedwire Communication

If the Sunny Home Manager is to communicate with other SMA devices via Speedwire, the Sunny Home Manager and the Speedwire devices must be in the same local network. Perform the following preparatory steps.

Inverters with Webconnect function

If an inverter is already registered in Sunny Portal with the Webconnect function, the inverter cannot be added to the Sunny Home Manager system in Sunny Portal.

- In order to be able to add the inverter to the Sunny Home Manager system in Sunny Portal, delete the inverter with Webconnect function from the Webconnect system in Sunny Portal or deactivate data reception for the inverter in the Webconnect system in Sunny Portal.

Requirements:

☐ DHCP must be active on the router (see router documentation). If your router does not support DHCP, you can configure the static network settings on the Speedwire device using SMA Connection Assist.

☐ All UDP ports > 1024 on the router or modem must be open for outgoing connections. If there is a firewall installed on the router or modem, you might have to adjust the firewall rules.

☐ It must be possible for the outgoing router or modem connections to reach all Internet destinations (target IP, target port). If there is a firewall installed on the router or modem, you might have to adjust the firewall rules.

☐ On the router or modem with NAT (Network Address Translation), no port forwarding must be entered. Potential communication problems can thus be prevented.

☐ There must be no packet filtering or manipulation for SIP packets on the router or modem.

☐ The routers and network switches with router function must forward the Multicast telegrams (telegrams with destination address 239.0.0.0 to 239.255.255.255) required for the Speedwire connection to all nodes of the Speedwire network.

☐ All network components used must support the IGMP protocol, minimum version 3 (IGMPv3) (see network component documentation).

Procedure:

1. **Deactivating the BLUETOOTH communication of the inverters**

   If an inverter communicates simultaneously via Speedwire/WLAN and BLUETOOTH, data recording errors will result. The Sunny Home Manager does not support communication with BLUETOOTH.

   - For inverters with BLUETOOTH interface, set NetID **0** (see inverter- or BLUETOOTH Piggy-Back documentation). This deactivates communication via BLUETOOTH.
2. Connect the Speedwire devices to the router / network switch (see Speedwire device documentation). Make sure that the distance to the mounting location of the Sunny Home Manager is not too great, as the Sunny Home Manager must later be connected to the same router/network switch.

6.3 Connecting the Sunny Home Manager to the Router

1. Connect the network cable to the network terminal of the Sunny Home Manager. The network cable must be suitable for connection to the Sunny Home Manager (see Section 4.1.4 "System Requirements", page 21).

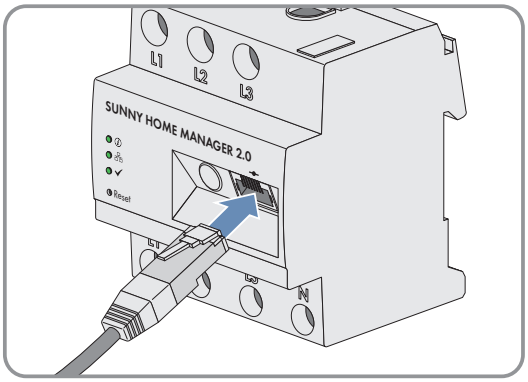

2. Connect the other end of the network cable to the router.

6.4 Establish communication between Sunny Home Manager and SMA Energy Meter

The SMA Energy Meter and the Sunny Home Manager must be connected to the same router.

Additionally required material (not included in the scope of delivery):

☐ 1 network cable (see Section 4.1.4 "System Requirements", page 21)

Procedure:

1. Connect the SMA Energy Meter to the router (see SMA Energy Meter installation manual).
2. Connect the Sunny Home Manager to the router (see Section 6.3, page 31).

6.5 Replacing the SMA Energy Meter

1. Write down the serial number of the new SMA Energy Meter. The serial number is to be found on the type label of the SMA Energy Meter.
2. Configure the new SMA Energy Meter in Sunny Portal (see Section 11.6 "Configuring the Energy Meter", page 67).

6.6 Connecting a Smart Appliance

Some modern home appliances have an Ethernet connection with which the data of the device can be called up via the local network. If there is an Internet connection via the network router, the manufacturers of household devices can use this data for maintenance purposes, for example. Visualization and control of the household devices via mobile devices (e.g. via app in the Smartphone) is also possible with this. If the manufacturer of the networked household devices, in cooperation with SMA Solar Technology AG, has implemented a special data exchange protocol for energy management in the device control, the Sunny Home Manager can control these loads directly via the local network. For information on the supported products (see Section 2.3, page 11). The smart appliances send information on the load type, the planned energy requirement, and the preferred operating time period to the Sunny Home Manager. The Sunny Home Manager factors this information into its load control, and also taking the configured optimization targets in the context of load control into account, sends appropriate start and stop signals to the loads.

Requirements:

☐ The device must support the data exchange protocol defined by SMA Solar Technology AG.

☐ The Sunny Home Manager must be located in the same local network as the device.

Additionally required material (not included in the scope of delivery):

☐ 1 network cable (see Section 4.1.4, page 21)

Procedure:

1. Connect the network cable to the device (see device documentation).
2. Connect the other end of the network cable to the router or network switch.

☑ The device is automatically recognized by the Sunny Home Manager. Once you have added the controllable device to the Sunny Home Manager system via the configuration wizard in Sunny Portal, the Sunny Home Manager will control the device automatically via the defined data exchange protocol.

Pairing

In the case of EEBus compatible home appliances, a pairing must be performed. The new device will appear in Sunny Portal only once the pairing has been completed successfully (see technical information: "SMA SMART HOME - Home appliance energy management using EEBus").

7 Commissioning

7.1 Testing the Connection to Sunny Portal

The Sunny Home Manager automatically establishes a connection to Sunny Portal. You can test whether there is a connection to Sunny Portal if you proceed as described in the following.

Requirements:

☐ DHCP must be active for the router (see router manual). If your router does not support DHCP, you can configure the static network settings on the Sunny Home Manager using the Sunny Home Manager Assistant (see Section 18.3 "Using the Sunny Home Manager Assistant", page 115).

☐ The Sunny Home Manager must be connected to the router (see Section 6.3 "Connecting the Sunny Home Manager to the Router", page 31).

☐ The Sunny Home Manager must be supplied with voltage (see the installation manual of the Sunny Home Manager).

Procedure:

1. Check whether the status LED of the Sunny Home Manager is glowing green and whether the performance LED is off.
   ☑ The status LED of the Sunny Home Manager is glowing green and the performance LED is off. There is a connection to Sunny Portal. You can register the Sunny Home Manager in Sunny Portal (see Section 7.2 "Registering in Sunny Portal", page 33).
   ✖ The status LED or the performance LED is continuously flashing red?
   The Sunny Home Manager cannot establish the connection to Sunny Portal automatically. This is the case, for example, if there is a proxy server in your network or if your router does not support DHCP.
   - Use the Sunny Home Manager Assistant (see Section 18.3 "Using the Sunny Home Manager Assistant", page 115).
2. Check whether the status LED of the Sunny Home Manager is glowing green and whether the performance LED is glowing green.
   ☑ The connection to and registration in Sunny Portal have already been executed. Use your user data to log on to Sunny Portal (see Section 7.3 "Logging In and Out of Sunny Portal", page 38).

7.2 Registering in Sunny Portal

Sunny Portal serves as the user interface of the Sunny Home Manager. Therefore, you must register the Sunny Home Manager in Sunny Portal.

Requirements:

☐ The PV system and all devices in the local network must be in operation and connected to the Sunny Home Manager via a router/network switch.

☐ The registration ID (RID) and the identification key (PIC) from the Sunny Home Manager type label must be available.

☐ NetID **0** must be set for Speedwire devices with integrated BLUETOOTH interface.

☐ The status LED must glow green and the performance LED must be off.

Procedure:

1. Start the PV System Setup Assistant.
2. Register as a new user in Sunny Portal.

   or

   Log in to Sunny Portal as an existing user.
3. Create a Sunny Home Manager system in Sunny Portal.

Starting the PV System Setup Assistant

The PV System Setup Assistant is a step-by-step guide of the processes required for user registration and the registration of Sunny Home Manager systems in Sunny Portal.

Procedure:

1. Open **www.SunnyPortal.com** and select [**PV System Setup Assistant**].
   or
   Go to **www.SunnyPortal.com/Register**.
   ☑ The PV System Setup Assistant opens.
2. Select [**Next**].

☑ The page **User registration** opens.

Register as a new user in Sunny Portal.

1. Activate the field **I am not yet registered** and select [**Next**].
2. Enter the necessary data for registration.
3. Select [**Next**].
   ☑ After a few minutes you will receive an e-mail containing a link and your access data to Sunny Portal.
   ✖ You did not receive an e-mail from Sunny Portal?

   The e-mail may have been automatically redirected to your spam mail folder.
   - Check whether the e-mail is in the spam mail folder.

   ✖ You did not receive an e-mail from Sunny Portal?

   You may have stated a different e-mail address.
   - Check whether the e-mail was sent to another e-mail address.
   - If the other e-mail address is an unknown address, restart the PV System Setup Assistant and register as a new user again.
4. Follow the link in the confirmation e-mail within 24 hours.
   ☑ Sunny Portal opens a separate window to confirm successful registration.
5. Select [**Next**].
6. The page **Select PV system** opens.

Log in to Sunny Portal as an existing user.

Requirement:

☐ You must already have a PV system in Sunny Portal.

Procedure:

1. Select the field **I am already registered in Sunny Portal**.
2. Enter the e-mail address and the Sunny Portal password in the fields **Sunny Portal e-mail address** and **Password**.
3. Select [**Next**].

☑ The page **Select PV system** opens.

Creating a Sunny Home Manager System in Sunny Portal

All devices with an identical password form a system. For this reason, a password used for all devices in a system is called a system password. The system password is the same as the device password for the user group **Installer**.

Requirements:

☐ A uniform user-defined system password must be set on all Speedwire devices for the user group **Installer**. If necessary, set a uniform system password for all Speedwire devices (see Sunny Explorer Help or manual of the Speedwire device).

Procedure:

1. Activate the field **Create a new PV system** and enter a system name (e.g. **My Sunny Home Manager system**).
2. In the window for entering the system password, enter the system password of the user role **Installer**:
   - If the standard password **1111** is still set on all devices for the user group **Installer**, enter a new system password.
   - If a different uniform password has already been set on all devices, enter this password as the system password.
   - If a uniform password has not been set on all devices, set a uniform password for the user group **Installer** (see Sunny Explorer Help or manual of the Speedwire device) and enter this password in the PV System Setup Assistant as the system password.
3. Enter the system password again in the field **Repeat password**.
4. Select [**Next**].

   ☑ The page **Select devices** opens.
5. Enter the identification key of the Sunny Home Manager in the field **PIC**. Enter the registration ID of the Sunny Home Manager in the field **RID**.
   Useful hint: You can read off the identification key and the registration ID from the type label on the side of the Sunny Home Manager or from the supplied label.
6. Select [**Identify**].

   ☑ Sunny Portal searches for the Sunny Home Manager with the corresponding identification key and registration ID. The PV System Setup Assistant displays the correct Sunny Home Manager with a green tick.

   ✖ The PV System Setup Assistant cannot find any Sunny Home Manager with the entered identification key and registration ID?
   - See Troubleshooting (see Section 18 "Troubleshooting", page 112).

7. Select [**Next**].
   ☑ The Sunny Home Manager now searches for devices in the local network. After a maximum of ten minutes the PV System Setup Assistant lists the serial numbers of any available devices in the local network.
   ✖ The PV System Setup Assistant cannot establish a connection to the Sunny Home Manager and to the Speedwire devices?
   or
   The PV System Setup Assistant lists none or not all of the Speedwire devices in your PV system?
   - Select [**Refresh**]. If the PV System Setup Assistant continues to list none or not all of the Speedwire devices, see Troubleshooting (see Section 18.2 "Errors during Registration in Sunny Portal", page 112).

   ✖ The PV System Setup Assistant lists own and third-party devices?
   - See Troubleshooting (see Section 18 "Troubleshooting", page 112).
8. Activate the checkboxes of the devices you wish to add to the Sunny Home Manager system. Tip: You can identify devices using the previously noted serial numbers.
9. Select [**Add**] to add the devices to the Sunny Home Manager system immediately.
   ☑ The system password is transferred to the devices. This process can take several minutes. The devices are then shown with a green tick.
   ✖ Some devices are shown with the warning symbol?
   Sunny Home Manager cannot access the devices. You may have entered an invalid system password or the connection to the devices could not be established.
   - See Troubleshooting (see Section 18 "Troubleshooting", page 112).
10. Select [**Skip forward**] to add the devices to the Sunny Home Manager system at a later time and continue with registration. Tip: You can add the devices to the Sunny Home Manager system as new devices after registration (see Section 13 "System Management", page 84).
    ☑ The window **Meter Configuration** opens.
11. Select [**Next**].
    ☑ The window **Meter Configuration** opens.

Configure the energy meter

1. In the **Meter Configuration** area, select the desired feed-in and purchased electricity meter or PV production meter from the drop-down list:

Application	Configuration
PV system with SMA inverters and measurement at the grid-connection point	• Select the entry **Internal Energy Meter** in the **Purchased Electricity and Grid feed-in** dropdown-list. • Select the entry **No energy meter** in the **PV Generation** drop-down list.

Application	Configuration
PV systems with inverters of other manufacturers and measurement at the grid-connection point and PV generation using a Sunny Home Manager and an SMA Energy Meter.	When connecting the Sunny Home Manager to the grid-connection point and the SMA Energy Meter to measure the PV generation. • Select the entry **Internal Energy Meter** in the **Purchased Electricity and Grid feed-in** dropdown-list. • Select the entry **SMA Energy Meter xxx** in the **PV Generation** drop-down list. Here, **xxx** is the placeholder for the SMA Energy Meter serial number. If there are two SMA Energy Meters in the PV system, select the desired SMA Energy Meter.
PV systems with inverters of other manufacturers and measurement at the grid-connection point and PV generation using a Sunny Home Manager and an SMA Energy Meter.	When connecting the Sunny Home Manager to the grid-connection point and the Sunny Home Manager to measure the PV generation: • Select the entry **SMA Energy Meter xxx** in the **Purchased Electricity and Grid feed-in** drop-down list. Here, **xxx** is the placeholder for the SMA Energy Meter serial number. If there are two SMA Energy Meters in the PV system, select the desired SMA Energy Meter. • Select the entry **Internal Energy Meter** in the **PV Generation** drop-down list.
PV system with existing SMA Energy Meters	• Select the entry **SMA Energy Meter xxx** in the **Purchased Electricity and Grid feed-in** drop-down list. Here, **xxx** is the placeholder for the SMA Energy Meter serial number. If there are two SMA Energy Meters in the PV system, select the desired SMA Energy Meter. • Select the entry **SMA Energy Meter xxx** in the **PV Generation** drop-down list. Here, **xxx** is the placeholder for the SMA Energy Meter serial number. If there are two SMA Energy Meters in the PV system, select the desired SMA Energy Meter.

2. Select [**Next**].
   ☑ The page **Extended PV System Properties** opens.

Entering the PV System Data

1. Enter the PV system data.
2. Select [**Next**].
   ☑ The PV System Setup Assistant shows a summary of your entered data.
3. Select [**Finish**].
   ☑ Sunny Portal confirms successful registration of the Sunny Home Manager system in a separate window.

4. To go to the Sunny Home Manager system, select [**To the PV system**].
   ☑ The Sunny Home Manager system opens.
5. Enter further PV system properties (see Section 15 "System Settings", page 96):
   - Add automatically recognized devices
   - Configure the load profiles of the automatically recognized devices
   - Enter the string configuration
   - Enter the operator data
   - Enter the PV array power
   - Enter the feed-in tariff, self-consumption tariff and electricity tariff
   - Configure settings for PV system monitoring

7.3 Logging In and Out of Sunny Portal

Logging into Sunny Portal

Requirement:

☐ The Sunny Home Manager must be registered with the PV System Setup Assistant in Sunny Portal (see Section 7.2 "Registering in Sunny Portal", page 33).

Procedure:

1. **Go to www.SunnyPortal.com**.
2. In the **Login** area, enter the e-mail address in the field **E-mail**.
3. Enter the Sunny Portal password in the field **Password**.
4. Activate the **SSL** checkbox to transmit the encrypted login data.
5. Activate the checkbox **Remain logged in** to stay logged in for your next Sunny Portal visits. This way, you stay logged into Sunny Portal until you log out via the user interface.
6. Select [**Login**].

Logging out of Sunny Portal

When you log out of Sunny Portal user interface, your PV system will be protected against unauthorized access.

Procedure:

- Select your user name in the header of the user interface and select [**Logout**].

8 Accessing the User Interface of the Sunny Home Manager System

If you have only created one system in Sunny Portal, you will automatically access the user interface of this Sunny Home Manager system after logging into Sunny Portal. If you have several systems in Sunny Portal, you will need to access the user interface of the Sunny Home Manager system after logging into Sunny Portal.

Procedure:

1. Log into Sunny Portal (see Section 7.3, page 38).
2. Select **PV System Selection > "My Sunny Home Manager system"** in the page and menu selection.

☑ The user interface of the Sunny Home Manager system opens.

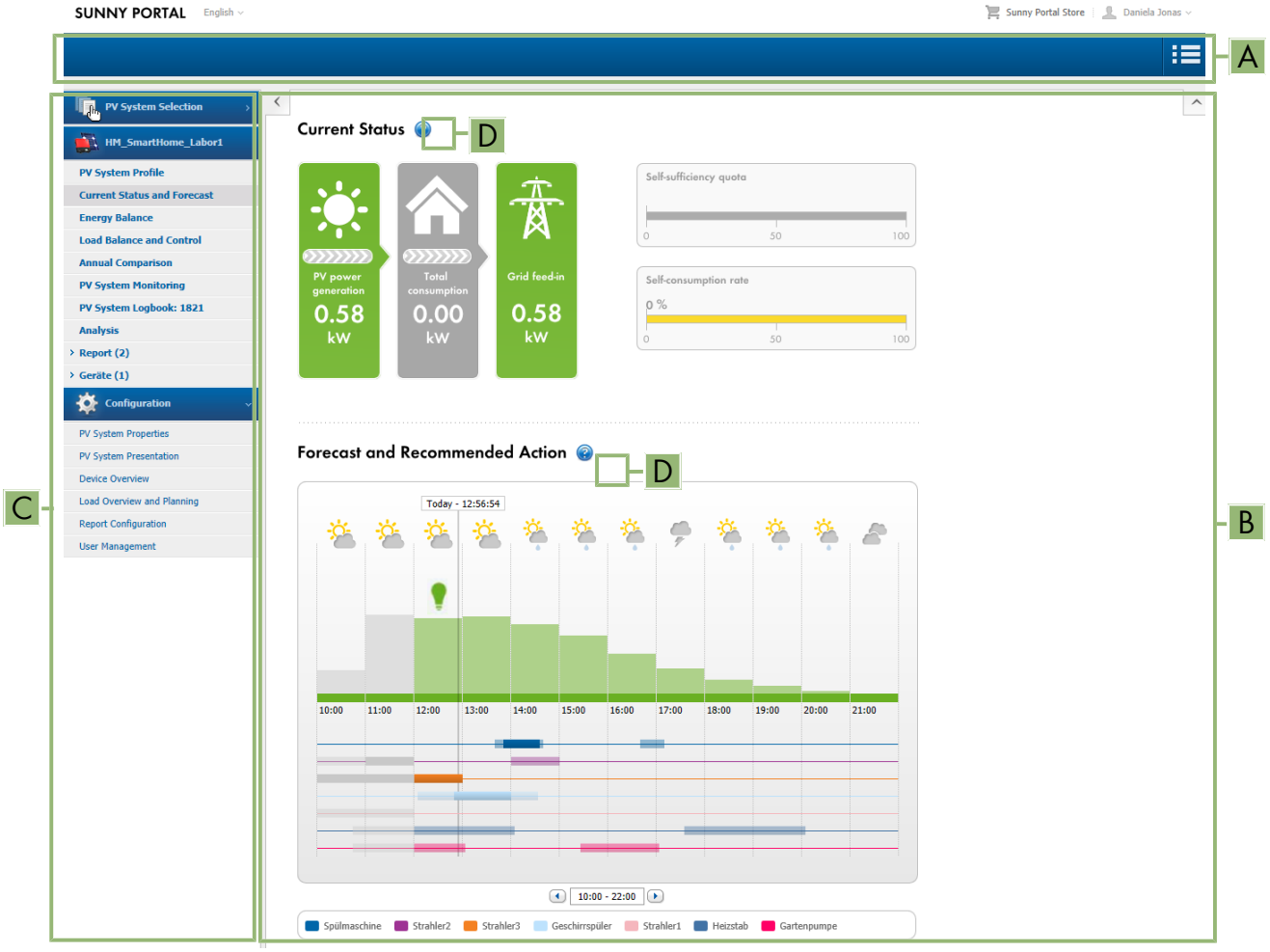

Figure 6: User interface of the Sunny Home Manager system in Sunny Portal (example)

Position	Designation	Explanation
A	Header	• Selection of the user interface language • Logout from Sunny Portal
B	Contents area	• Contents of the selected page
C	Page and menu selection	• Access to the various pages and menus of the Sunny Home Manager system
D	Help	• Explanation of the content of the selected page • Link to Sunny Portal help

9 Page and Menu Selection

9.1 System Selection and System List

The following is required to display the menu item and page:

☐ Your e-mail address must be assigned to more than one system in Sunny Portal.

System Selection Menu Item

Under the menu item **Select PV system**, you can select the desired system (see Section 8, page 39).

System List Page

The following data is shown for each system:

- Nominal PV system power in kWp
- Total yield so far
- Total yield for the following time periods:
  - Current day
  - Previous day
  - Current month
- Specific system yield (kWh/kWp) for the following time periods:
  - Current month
  - Current year

By default, the system list is sorted in ascending order in accordance with the specific system yield. You can also sort the system list by other values and in descending order (see Section 10, page 63).

9.2 My Sunny Home Manager System

9.2.1 PV System Profile

Sunny Portal compiles the PV system profile from information that you can enter in different Sunny Portal pages.

The following information can be displayed in the PV system profile:

Information	Configuration, see Section
Location	Section 15.2, page 97
Operator	Section 15.6, page 99
Commissioning	Section 15.2, page 97
Nominal system power	Section 15.4, page 98
Annual production	Section 15.13, page 104
CO_2 avoided	Section 15.12, page 104
Modules	Section 15.4, page 98
Tilt angle	Section 11.10, page 70
Tracking	

Information	Configuration, see Section
Inverter	Sunny Portal receives this information from the devices.
Communication	
Description	Section 15.5, page 99
PV system image	Section 15.7, page 99

9.2.2 Current Status And Forecast

The Sunny Home Manager continuously logs the energy generated by the PV system. The Sunny Home Manager also receives location-based weather forecasts via the Internet. Based on this information, the Sunny Home Manager creates a PV yield forecast for the PV system.

The data for the generated energy can only be fully displayed if the integrated measuring device or an externally assigned SMA Energy Meter measures the energy flow at the grid-connection point.

The Sunny Home Manager receives the PV generation data via the connected SMA inverters or via an optionally connected SMA Energy Meter, which measures the PV generation output of the local PV system.

To query forecast information, you must fill in the following input fields on the **System properties** page in Sunny Portal:

- Latitude
- Longitude
- Nominal PV system power (necessary for the correct power forecast)

If one of the three entries is missing, either the weather symbols are not displayed, the power forecast is not present, or it is incorrect.

Current Status Area

The following is required to display the current status area:

☐ The data request interval must be set to **Automatic** (see Section 11.7, page 68).

Changing the display

In the area **Current status** you can choose between the displays **Option I** and **Option II**.

- Select the page **Current status and Forecast** in the page and menu selection.
- Select [**Configuration - Current Status and Forecast**] in the contents area below.
- Select the desired option in the field **Display**.

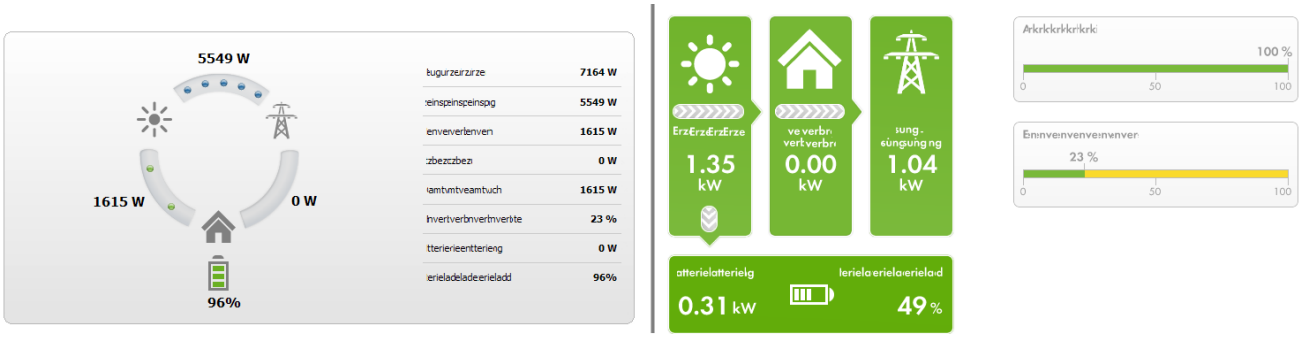

Figure 7: Display: left **Option I** and right **Option II** (examples)

Option I:

The display **Option I** contains the following current data:

Designation	Explanation
PV generation	Currently generated power of your PV system
Grid feed-in	Power that your system is currently feeding into the utility grid If your system is generating more power than your household needs at the moment or can be stored in the battery, the surplus power is fed into the utility grid.
Self-consumption	Power that your household is currently drawing from your system and, if applicable, being stored into the battery from your system.
Purchased electricity	Power that your household is currently drawing from the utility grid
Total consumption	Power that your household is currently drawing from the utility grid
Self-consumption quota	Current ratio of self-consumption to PV power
Battery discharging*	Power that your household is currently drawing from the battery
Battery state of charge*	Current state of charge of the battery in percent, in relation to the battery capacity

* Only displayed for PV systems with battery

Option II:

The display **Option I** contains the following current data:

Designation	Explanation
PV generation	Currently generated power of your PV system
Consumption (Total consumption)	Power that your household is currently drawing from your system, the utility grid and, if applicable, your battery The colors visualize which portion of the consumption is currently made up of purchased electricity, direct consumption (PV system) and, if applicable, battery discharging.
Purchased electricity	Power that your household is currently drawing from the utility grid
Grid feed-in	Power that your system is currently feeding into the utility grid If your system is generating more power than your household needs at the moment or can be stored in the battery, the surplus power is fed into the utility grid.
Battery charging*	Power that is being currently charged from your system into the battery
Battery discharging*	Power that your household is currently drawing from the battery

Designation	Explanation
Self-sufficiency quota	Current ratio of internal power supply to total consumption Internal power supply: Power that your household is drawing directly from your system (direct consumption) and, if applicable, from the battery (battery discharging). In systems without batteries, the self-consumption is the same as the internal power supply.
Self-consumption quota	Current ratio of self-consumption to PV power Self-consumption: the power that your household draws directly from your system (direct consumption) and, if applicable, the power that your system stores in the battery (battery charging).

* Only displayed for PV systems with battery

Forecast and Recommended Action Area

The **Forecast and Recommended Action** diagram visualizes the following information:

- Tariff for the electric current purchased from the utility grid
- Expected PV power
- Weather forecast for the current date (The data is not available in all countries.)
- Scheduled time periods for operation of the loads

You can have a forecast displayed for up to 48 hours from the currently selected time.

Tip: Click on the diagram, hold down the left mouse button and move the mouse to the right or left. This way you can select a different time period.

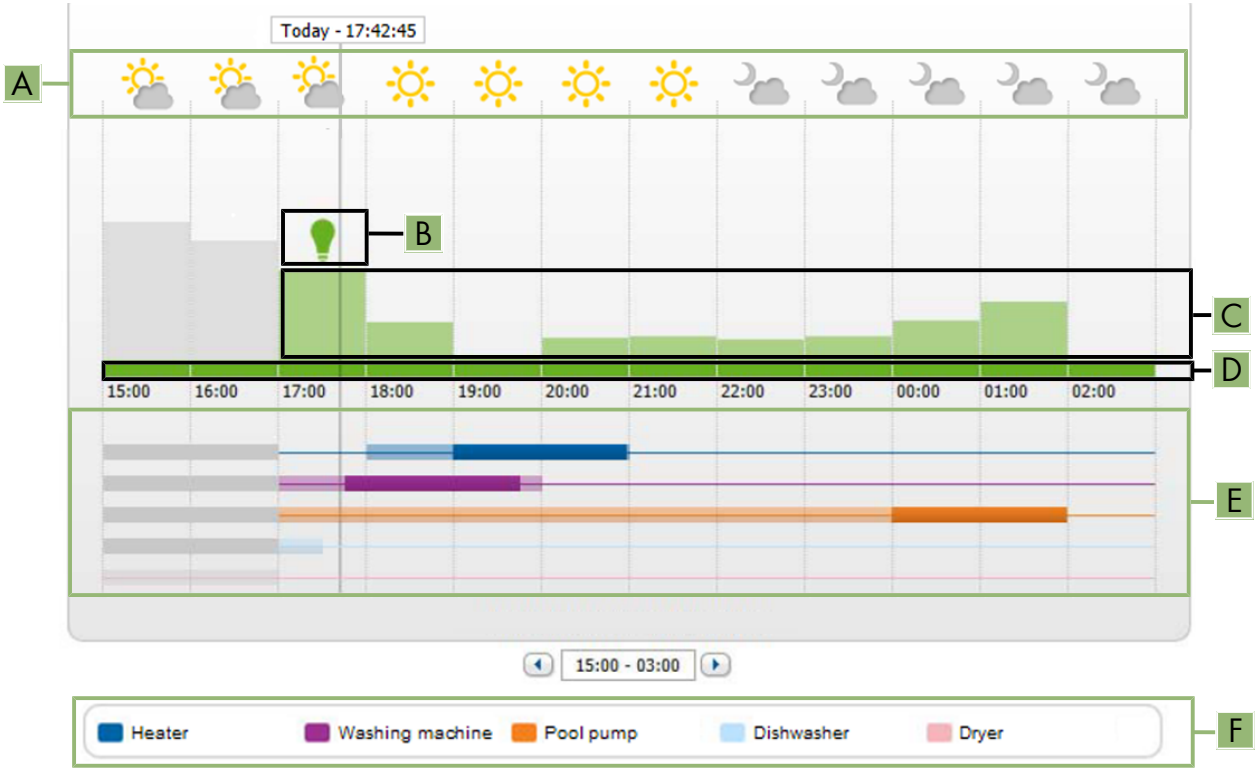

Figure 8: **Forecast and Recommended Action** diagram (example)

Position	Explanation
A	Weather forecast
B	Suitable time for manually switching on loads The Sunny Home Manager takes the following information into consideration for the recommended action: • Expected PV power (see position D) • Expected energy consumption of the household and of loads for which the Sunny Home Manager receives measured values of the power consumed via radio-controlled sockets or via direct communication. • The Sunny Home Manager determines the anticipated energy consumption in accordance with the consumption forecast based on the "learned" consumption behavior of the individual household. • Feed-in tariff (see Section 15.8, page 101) • Electricity tariff (see Section 15.8, page 101) • Optimization target (see Section 15.11, page 103) • Azimuth and tilt angle (see Section 15.1, page 96)

Position	Explanation
C	Expected PV power in accordance with the PV yield forecast The Sunny Home Manager determines the PV power that can be expected in each case using the weather forecast for the selected location and the "learned" behavior of the system. Tip: When you move the mouse over one of the bars, the following details for this time period will be displayed in a window: • Estimated PV generation • Estimated consumption • Difference between the estimated PV generation and estimated consumption
D	Tariff for the electric current purchased from the utility grid • Red: expensive • Green: good value If you have only entered one electricity tariff, green is always displayed. • Other colors: electricity tariffs between the highest and the lowest electricity tariff
E	View of the time periods for the planned operation of the loads (load prognosis) • The configured time periods are shown as colored, semi-transparent bars. • Time periods in which the loads were actually in operation or are going to be in operation are shown as colored, solid bars.
F	Loads legend The legend shows which color is assigned to which load in the time-period view (E).

9.2.3 Energy Balance

Requirements for displaying the page:

☐ The integrated measuring device or an externally assigned SMA Energy Meter must measure the energy flow at the grid-connection point.

The additionally required PV generation data will be determined either directly by the connected SMA inverters or can be captured via an additional PV production meter in PV systems with Sunny Home Manager.

Display with Battery

If a battery inverter is present in your system, you can select between the simplified view without battery data and the detailed view with battery data.

- To display the data of the battery in the diagram and in the area **Energy balance**, activate the checkbox **Detailed view**.
- To avoid displaying the data of the battery in the diagram and in the area **Energy Balance**, deactivate the checkbox **Detailed view**.

Showing and Hiding Diagram Data

You can show and hide the diagram data indicated in the legend by clicking on the respective entry in the legend.

The page **Energy balance** includes the following tabs:

Tab	Content
Current	Data in the **Consumption** diagram: • **Current value of consumption**: Power that your household is currently drawing from your system (direct consumption or internal power supply for systems without battery), from the utility grid (purchased electricity) and, if applicable, from the battery (battery discharging) • **Purchased electricity**: Power that is currently being drawn by your household from the utility grid • **Internal power supply**: Power that is currently being supplied to your household by your system For systems with battery, the power comes preferably directly from the system (direct consumption). If the power produced by the system is not sufficient, the remaining power is supplied by discharging the battery. • **Battery discharging** (only displayed for systems with battery): Power that your household is currently drawing from the battery • **Direct consumption** (only displayed for systems with battery): Power that your household is currently drawing from your system, without intermediate storage in the battery
Current	Data in the **Generation** diagram: • **Current Power**: Power that your system is currently generating • **Self-consumption**: Power that your household is currently drawing directly from your system (direct consumption) and the power that your PV system is currently storing in the battery (battery charging) In systems without batteries, self-consumption is the same as internal power supply. • **Battery charging** (only displayed for systems with battery): Power that your system is currently storing in the battery • **Grid feed-in**: Power that your system is currently feeding in to the utility grid If your system is producing more power than your household needs at the moment or can be stored in the battery, the surplus power is fed into the utility grid.

Tab	Content
Current	Additional data: • **Self-consumption rate**: Current ratio of self-consumption to PV power • **Direct consumption quota** (only displayed for systems with battery): Current ratio of direct consumption to PV power • **Self-sufficiency quota**: Current ratio of internal power supply to total consumption • **Limiting of the active power feed-in**: Will only be displayed for Sunny Home Manager systems if you have set active power feed-in limitation for your PV system. A red line will indicate the maximum amount of active power that may be fed into If you have limited the active power feed-in to 0%, the red line runs directly on the x-axis of the diagram. Limitation of the active power feed-in to 0% is only supported by inverters that support the fallback function (fallback: in the event of a communication failure between the Sunny Home Manager and the inverter, the inverter reverts to an output power of 0 watts). For more information see the inverter manual at www.SMA-Solar.com.
Day	Data in the **Consumption** diagram: • **Daily consumption**: Energy that your household drew from your PV system (direct consumption or internal power supply for systems without battery), the utility grid (purchased electricity) and, if applicable, the battery (battery discharging) on the day selected • **Purchased electricity**: Energy that your household drew from the utility grid on the day selected • **Internal power supply**: Energy that was supplied to your household by your PV system on the day selected For systems with battery, the energy comes preferably directly from the system (direct consumption). If the power produced by the system is not sufficient, the remaining power is supplied by discharging the battery. • **Battery discharging** (only displayed for systems with battery): Energy that your household drew from the battery on the day selected • **Direct consumption** (only displayed for systems with battery): Energy that your household drew directly from your PV system on the day selected, without intermediate storage in the battery
Day	Data in the **Generation** diagram: • **Daily yield**: Energy that your system generated on the day selected • **Self-consumption**: Energy that your household drew directly from your system on the day selected (direct consumption) and the energy that your system stored in the battery (battery charging) on the day selected • **Battery charging** (only displayed for systems with battery): Energy that your system stored in the battery on the day selected • **Grid feed-in**: Energy fed by your system into the utility grid on the day selected

Tab	Content
Day	Additional data: • **Self-consumption rate**: Ratio of self-consumption to daily yield • **Direct consumption quota** (only displayed for systems with battery): Ratio of direct consumption to daily yield • **Self-sufficiency quota**: Ratio of internal power supply to daily consumption • **Limiting of the active power feed-in**: If you have set a limit to active power feed-in for your system, a red line will indicate the maximum amount of active power permitted to be fed into the utility grid. If you have limited the active power feed-in to 0%, the red line runs directly on the x-axis of the diagram.
Month	Data in the **Consumption** diagram: • **Monthly consumption**: Energy that your household drew from your system (direct consumption or internal power supply for systems without battery), the utility grid (purchased electricity) and, if applicable, the battery (battery discharging) during the month selected. • **Purchased electricity**: Energy that your household drew from the utility grid during the month selected • **Internal power supply**: Energy that was supplied to your household by your PV system during the month selected For systems with battery, the energy comes preferably directly from the system (direct consumption). If the power produced by the system is not sufficient, the remaining power is supplied by discharging the battery. • **Battery discharging** (only displayed for systems with battery): Energy that your household drew from the battery during the month selected • **Direct consumption** (only displayed for systems with battery): Energy that your household drew directly from your PV system during the month selected, without intermediate storage in the battery
Month	Data in the **Generation** diagram: • **Monthly yield**: Energy that your PV system generated during the month selected • **Self-consumption**: Energy that your household drew directly from your PV system during the month selected (direct consumption) and the energy that your PV system stored in the battery (battery charging) during the month selected • **Battery charging** (only displayed for systems with battery): Energy that your PV system stored in the battery during the month selected • **Grid feed-in**: Energy that your PV system fed into the utility grid during the month selected.
Month	Additional data: • **Self-consumption rate**: Ratio of self-consumption to monthly yield • **Direct consumption rate** (only displayed for systems with battery): Ratio of direct consumption to monthly yield • **Self-sufficiency quota**: Ratio of internal power supply to monthly consumption

Tab	Content
Year	Data in the **Consumption** diagram: • **Annual consumption**: Energy that your household drew from your system (direct consumption or internal power supply for systems without battery), the utility grid (purchased electricity) and, if applicable, the battery (battery discharging) during the year selected • **Purchased electricity**: Energy that your household drew from the utility grid during the year selected • **Internal power supply**: Energy that was supplied to your household by your PV system during the year selected For systems with battery, the energy comes preferably directly from the system (direct consumption). If the power produced by the system is not sufficient, the remaining power is supplied by discharging the battery • **Battery discharging** (only displayed for systems with battery): Energy that your household drew from the battery during the year selected • **Direct consumption** (only displayed for systems with battery): Energy that your household drew directly from your PV system during the year selected, without intermediate storage in the battery
Year	Data in the **Generation** diagram: • **Annual yield**: Energy that your PV system generated during the year selected • **Self-consumption**: Energy that your household drew directly from your PV system during the year selected (direct consumption) and the energy that your PV system stored in the battery (battery charging) during the year selected • **Battery charging** (only displayed for systems with battery): Energy that your PV system stored in the battery during the year selected • **Grid feed-in**: Energy that your PV system fed into the utility grid during the year selected.
Year	Additional data: • **Self-consumption rate**: Ratio of self-consumption to annual yield • **Direct consumption quota** (only displayed for systems with battery): Ratio of direct consumption to annual yield • **Self-sufficiency quota**: Ratio of internal power supply to yearly consumption

Tab	Content
Total	Data in the **Consumption** diagram: • **Total consumption** Total amount of energy that your household has drawn from your PV system (direct consumption or internal power supply for systems without battery), from the utility grid (purchased electricity) and, if applicable, from the battery (battery discharging). • **Purchased electricity**: Total amount of energy that your household drew from the utility grid so far. • **Internal power supply**: Total amount of energy that has been supplied to your household by your PV system so far. For systems with battery, the energy comes preferably directly from the system (direct consumption). If the power produced by the system is not sufficient, the remaining power is supplied by discharging the battery. • **Battery discharging** (only displayed for systems with battery): Total amount of energy that your household drew from the battery so far. • **Direct consumption** (only displayed for systems with battery): Total energy that your household drew directly from your system so far, without intermediate storage in the battery
Total	Data in the **Generation** diagram: • **Total yield**: Total amount of energy that your PV system has generated so far • **Self-consumption**: Total amount of energy that your household drew directly from your PV system so far (direct consumption) and energy that your PV system has stored in the battery (battery charging) so far. • **Battery charging** (only displayed for systems with battery): Total energy that your system has stored in the battery so far • **Grid feed-in**: Total amount of energy that your system has fed into the utility grid so far
Total	Additional data: • **Self-consumption rate**: Ratio of self-consumption to total yield. • **Direct consumption rate** (only displayed for systems with battery): Ratio of direct consumption to total yield • **Self-sufficiency quota**: Current ratio of internal power supply to total consumption.

Difference between Internal Power Supply and Self-Consumption in PV Systems with Batteries

Internal power supply = the sum of power/energy that your household draws directly from your system (direct consumption) and the battery (battery discharging). The internal power supply therefore indicates from which source your household is supplied with PV energy - from the PV system or from the battery.

Self-consumption = the sum of the power/energy that your household draws directly from your system (direct consumption) and the power/energy that your system stores in the battery (battery charging). The self-consumption therefore indicates how the PV energy is consumed - via your household or via battery charging.

In systems without batteries, self-consumption is the same as internal power supply.

9.2.4 Load Balance and Control

Requirements for displaying the page:

☐ In the Sunny Home Manager system, loads must be available and configured which are connected to radio-controlled sockets or which can be directly controlled by the Sunny Home Manager (see Section 12.2, page 72).

Tip: you can select the loads that are to be displayed in the diagram (see Section 10.3, page 64).

Tip: the loads are displayed in different colors in the diagrams for better visualization. The assigned color can be changed if necessary (see Section 12.3.2, page 75).

This page consists of the following tabs:

Tab	Content
Current	**The following is required to display the tab:** ☐ The data request interval must be set to Automatic (see Section 11.7, page 68). The tab shows the following current data: • Line at the bottom of the diagram: Live data on the flow of the consumed power of each load in the selected display period • **Operating Mode**: Operating mode of the radio-controlled socket The button of the currently selected operating mode is highlighted in color. In addition, the LED status of the radio-controlled socket is displayed via an LED symbol. The operating mode can be changed accordingly using the buttons (see Section 12.2.6, page 74). If the operating mode is controlled via the Sunny Home Manager, **(Automatic)** appears behind the operating mode. • **Current value of consumption**: Power currently being drawn by the load
Day	• With selected view **Stacking order view** ( ): The lines below in the diagram show the progression of the power drawn by each load on the selected day. Using the legend below the diagram, you can show and hide the loads displayed in the diagram and change the stacking order of the loads in the diagram (see Section 10.3, page 64). • With selected view **Time period** ( ): The light-colored bars show the time periods which you have configured for the operation of the load. The dark-colored bars show the time periods in which the loads were actually in operation. – The symbols ▶ and ■ show the start and the stop point of operation. – If you move the mouse pointer over one of the dark-colored bars, the energy consumed by the load in this time period is displayed in kWh. • In the table: **Daily consumption**: Energy drawn by the load on the selected day **Configuration**: With the **Configuration** button [ ] you can configure the properties of the load.

Tab	Content
Month	• In the diagram: Energy drawn by each load in the selected month in days If you move the mouse pointer over one of the bars in the diagram, a window opens with the following information: – The respective daily consumption of the loads operated on that day – The respective percentage of the daily consumption which was covered by PV energy ( ), battery discharging ( ) or by the utility grid ( ) • In the table: **Monthly consumption**: Energy drawn by the load in the selected month **PV energy percentage**: Percentage of the monthly consumption covered by PV energy **Battery discharging percentage**: Percentage of the monthly consumption covered by battery discharging **Purchased electricity percentage**: Percentage of the monthly consumption covered by the utility grid **Configuration**: With the Configuration button [ ] you can configure the properties of the load.
Year	• In the diagram: Energy drawn by each load in the selected year in months • In the table: **Annual consumption**: Energy drawn by the load in the selected year **PV energy percentage**: Percentage of the annual consumption covered by PV energy **Battery discharging percentage**: Percentage of the annual consumption covered by battery discharging **Configuration**: With the Configuration button [ ] you can configure the properties of the load.
Total	• In the diagram: Energy drawn by each load in the individual years • In the table: **Total consumption**: Total energy drawn by the load so far **PV energy percentage**: Percentage of the total consumption drawn from PV energy **Battery discharging percentage**: Percentage of the total consumption drawn from battery discharging **Purchased electricity percentage**: Percentage of the total consumption drawn from the utility grid **Configuration**: With the Configuration button [ ] you can configure the properties of the load.

9.2.5 Energy and Power

Requirements for displaying the page:

☐ No purchased electricity meter and no feed-in meter must be connected to the Sunny Home Manager.

The Sunny Home Manager receives the PV generation data via the connected SMA inverters or via an optionally connected PV production meter. The diagrams on the individual tabs show the energy yields only.

This page consists of the following tabs:

Tab	Content
Day	• PV power curve over the course of the day
Month	• Total yield on the days of a month • Average expected yield*
Year	• Total yield in the months of a year • Average expected yield*
Total	• Total yield of the previous years • Average expected yield*

* Only displayed if activated on the page **PV System Properties** (see Section 15.13, page 104)

9.2.6 Annual Comparison

Tab	Content
Total yield	• Yield development over the previous years • Average yield development over the previous years • Average expected yield*
Specific system yield	The specific system yield is a key figure for describing the quality of a system. System-specific factors such as location, tilt angle, shading, module and inverter types are taken into consideration to calculate the specific system yield. The specific system yield enables you to compare various systems at various locations. • Development of the specific system yield of each previous year • Average development of the specific system yield of the previous years • Average expected yield*

* Only displayed if activated on the page **PV System Properties** (see Section 15.13, page 104)

9.2.7 System Monitoring

The page can display the following information:

- System Configuration
- Communication Monitoring
- Inverter comparison

System configuration

Requirements for displaying the information:

☐ You must have detected new devices with the configuration wizard but not yet added them to the Sunny Home Manager system (see Section 13.1, page 84).

You can access the configuration wizard via system configuration. Using the configuration wizard, you can add new devices to the system or replace devices.

Communication Monitoring

Communication monitoring displays the current communication status between the Sunny Home Manager and Sunny Portal. If the Sunny Home Manager does not communicate with Sunny Portal within the set time, Sunny Portal will display an error and notify you by e-mail (see Section 14.4, page 93).

The communication monitoring status is displayed with the following symbols:

Symbol	Status	Explanation
	Deactivated	Communication monitoring is not set (see Section 14.4, page 93).
	OK	Communication with Sunny Portal is OK. The time of last contact is displayed.
	Error	Communication with Sunny Portal is interrupted. The **Details** link provides you with detailed information on the time of the last contact. The error will be displayed until it has been rectified. If the error is not corrected, Sunny Portal will send another e-mail reminder each day for up to three days after the first e-mail was sent.
	E-mail reminder is activated	Clicking the bell icon stops the sending of reminder e-mails for the current error. If a new error occurs, the e-mail reminder will be sent again.

Inverter comparison

Requirements for displaying the information:

☐ The system must contain at least two inverters.

The inverter comparison enables Sunny Portal to recognize possible yield losses. If the specific yield of an inverter differs significantly from the mean yield of all the inverters, Sunny Portal can notify you by e-mail (see Section 14.5, page 94).

Symbol	Status	Explanation
	Deactivated	The inverter comparison is not activated (see Section 14.5, page 94).

Symbol	Status	Explanation
	OK	The yields of the monitored inverters are within the configured range. The total yield of all inverters on the last day is displayed.
	Error	The specific yield is outside the tolerance for at least one monitored inverter. You can access the following information via the **Details** link: • Specific yield of the affected inverters • Average yield value of all monitored inverters

9.2.8 PV System Logbook

This page shows messages regarding the system status. The following message types are available:

- Info
- Warning
- Disturbance
- Error

These messages help you to identify disturbances in your system, for example. The number of unconfirmed messages is shown after the colon of the page name in the menu.

Example: Display of Unconfirmed Messages

PV System Logbook: 5 means that there are five unconfirmed messages of the types **Error**, **Disturbance** or **Warning**.

You can filter messages and confirm that you have read the messages (see Section 14.2, page 89).

9.3 Analysis

On the page **Analysis**, you can compare the power and yield values of individual inverters with one another or with the complete system.

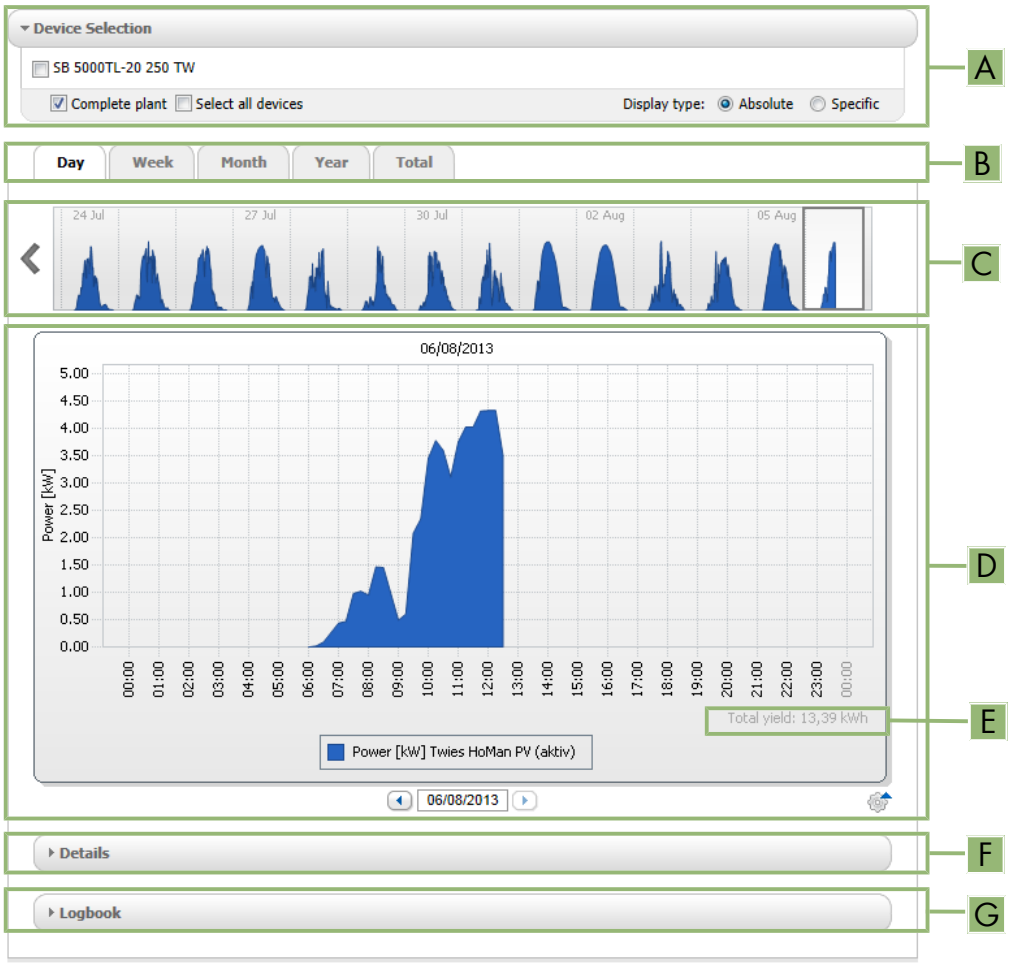

Figure 9: **Analysis** page (example)

Position	Explanation
A	**Device Selection** area
B	Tabs
C	Diagram preview* The diagram preview is divided into sections by lines. If you select a section in the diagram preview, the content is shown in the large diagram.
D	Large diagram Tip: If you move the mouse on to the diagram, the value from the area **Details** is shown next to the cursor.
E	**Total yield** or **Spec. total yield** Depending on the type of display selected in the area **Device selection**, the total yield or specific total yield will be displayed here.

Position	Explanation
F	**Details** area
G	**Logbook** area

* Not shown on the **Total** tab

Device Selection area

In this area, you can select whether the complete system and/or individual inverters are to be displayed in the large diagram and in the **Details** area. Moreover, you can select whether absolute or specific values are to be displayed.

Select devices

1. To display the values of the complete system, activate the checkbox **Complete PV system** in the area **Device selection**.
2. To display the values of individual inverters, perform the following steps:
   - Select the area **Device selection** .
     ☑ The area opens and the individual inverters are displayed.
   - Activate the checkboxes for the desired inverters.
     Tip: If you activate the checkbox **Select all devices**, the checkboxes for all inverters will be activated.

Selecting the display type

- In the area **Device selection**, next to **Display type**, select the desired option:
  - **Absolute**: Shows the system yield (kWh) or the power (kW).
  - **Specific**: Shows the specific system yield (kWh/kWp) or the specific system power.

Tabs

Tab	Explanation
Day	Diagram preview: • Preview of diagrams with the progression of the PV system yields for individual days Tip: If you move the cursor over a day in the diagram, the total yield of the PV system for this day is shown. Large diagram: • Power value curve as 15-minute mean values of the selected devices for the selected day • Bottom right in the diagram*: Total yield of the PV system for the selected day
Week	Diagram preview: • Preview of diagrams with the progression of the PV system yields for individual weeks Tip: If you move the cursor over a week in the diagram, the total yield of the PV system for this week is shown. Large diagram: • Power value curve as 15-minute mean values of selected devices for the selected week. • Bottom right in the diagram*: Total yield of the PV system for the selected week

Tab	Explanation
Month	Diagram preview: • Preview of diagrams with the yield values of the PV system for each month in days Tip: If you move the cursor over a month in the diagram, the total yield of the PV system for this month is shown. Large diagram: • Yield values of selected devices for the selected month in days • Bottom right in the diagram*: Total yield of the PV system for the selected month
Year	Diagram preview: • Preview of diagrams with the yield values of the PV system for each year in months Tip: If you move the cursor over a year on a diagram, the total yield of the PV system for this year is shown. Large diagram: • Yield values of the selected devices for the selected year in months • Bottom right in the diagram*: Total yield of the PV system for the selected year
Total	Large diagram: • Yield values of selected devices for individual years • Bottom right in the diagram*: Total yield of the PV system for all years together

* Only displayed if the checkbox **Complete PV system** is activated in **Device selection**

Details area

This area contains the power values of the displayed diagram as 15-minute mean values.

Logbook area

This area contains messages from selected devices and associated higher-level system messages.

9.4 Performance Ratio

Requirements for displaying the page:

☐ A Sunny SensorBox must be installed in your Sunny Home Manager system. The Sunny SensorBox measures the solar irradiation values at the installation site of the PV modules and makes this information available to the Sunny Home Manager.

The performance ratio is a measure of the quality of a PV system that is independent of location (for information on the performance ratio, see the technical information "Performance Ratio" at www.SMA-Solar.com).

This page displays the following PV system data:

- Mean values of the performance ratio for the days of a month
- Mean values of the performance ratio for the months of a year

9.5 System Report

Daily System Report

This page displays the following inverter data:

- Table with daily yield, monthly yield, annual yield
- Diagram with the development of the meter reading over the hours of a day

This page can be sent along with a **Daily info report** (see Section 14.3.2, page 91).

Monthly System Report

This page displays the following inverter data:

- Table with monthly yield and annual yield
- Diagram with the development of the meter reading over the days of a month

The page can be sent along with a **Monthly info report** (see Section 14.3.2, page 91).

9.6 Devices

A page with the respective inverter data for each inverter is displayed under the menu item **Devices**:

- Diagram with the development of the meter reading over the months of a year
- Diagram with the mean power value for one day in hours

9.7 Configuration

9.7.1 System Properties

This page consists of the following tabs:

Tab	Content
System data	Displays the general data of the PV system. You can configure system settings using this tab (see Section 15, page 96).
Operator	Displays the operator's contact information.
Parameters	Displays the following data: • Feed-in tariff • Limitation of active power feed-in • Grid management services via Ethernet-based communication • Electricity tariff • Optimization target • CO_2 avoided • Expected yield • If there is a Sunny SensorBox in your Sunny Home Manager system: performance ratio
Data releases	Displays to what extent SMA Solar Technology AGor third parties may use your data. You can edit the data releases using this tab (see Section 15.15, page 106).

9.7.2 System Presentation

The page **PV system presentation** offers you the following options:

- Send a link to your released pages to third parties (see Section 10.4.1, page 64).
- Embed the page **PV system profile** in other websites.

9.7.3 Device Overview

The page **Device Overview** includes the following tabs:

- **Device Overview**
- **Overview of New Devices**

Device Overview

This tab displays information on all the devices in your PV system.

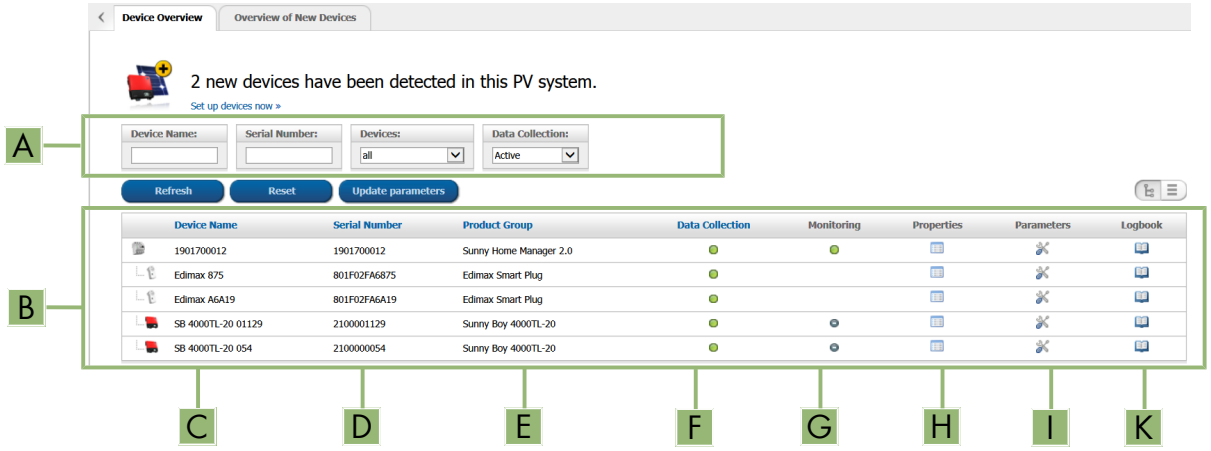

Figure 10: **Device overview** tab (example)

Position	Designation	Explanation
A	Filter	Text fields and drop-down lists for filtering the device overview (see Section 11.1, page 66).
B	Device list	–
C	Device name	Device name
D	Serial number	Serial number of the device
E	Product group	Product group of the device, e.g. Sunny Home Manager, Sunny Boy 3000
F	Data collection	Displays whether the data of this device is to be used on your Sunny Portal pages (see Section 13.2, page 85).
G	Monitoring	Displays whether the communication monitoring or the inverter comparison is activated ( ) or deactivated ( ) for the devices (see Section 9.2.7, page 53).
H	Properties	Opens tab with device properties (see Section 11.2, page 66). You can make settings on the devices using the **Properties** tab.

Position	Designation	Explanation
I	Parameter	Opens the **Parameters** tab with the device parameters (see Section 11.3, page 66).
K	Logbook	Opens the **System Logbook** tab with the messages for this device (see Section 14.2.1, page 89).

Overview of New Devices

Via this tab, you can add new devices to the system or replace devices using the configuration wizard (see Section 13.1, page 84).

9.7.4 Load Overview and Planning

The page displays information on all detected loads in your PV system and the time periods for which the loads are scheduled to operate.

This page consists of the following areas:

- **Load Overview and Planning**
- **"Name of Load"**

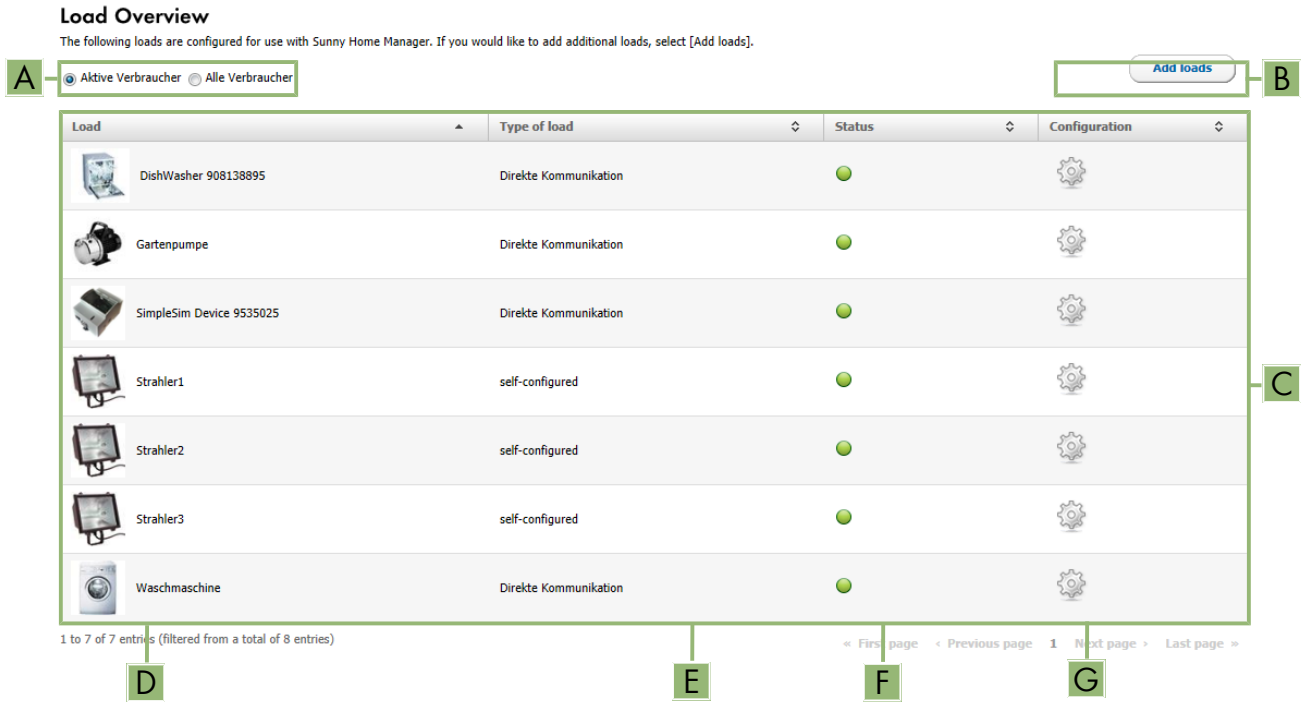

Figure 11: **Load overview** (example)

Position	Designation	Explanation
A	Filter options	Using the filter options, you can filter the list of loads. Selecting the option **Active loads** will hide the loads that are currently not assigned to a radio-controlled socket and therefore not controlled by the Sunny Home Manager.

Position	Designation	Explanation
B	Add loads	Using this button, you can add further loads to the Sunny Home Manager system. Smart appliances are recognized automatically by the configuration wizard and are displayed under **Device Overview > Overview of New Devices**. Following successful registration, the devices are displayed on the page **Load Overview and Planning** in the area **Load Overview**.
C	Load list	List of loads which have been configured for use with the Sunny Home Manager.
D	Loads	Symbol and name of the load
E	Type of load	Type of the load
F	Status	Status of the load = OK Load is fully configured and receives data = Not active Load is not assigned to a radio-controlled socket. = Load is not fully configured
G	Configuration	Opens the tab **Name of Load**, on which you can configure the load properties (see Section 12.3, page 75).

Load Planning

Load planning provides a graphical overview of the scheduled time periods in which the active loads must be operated (dark-colored bars) or can be operated (light-colored bars).

"Name of Load"

You can access the tab **"Name of Load"** by going to the page **Load overview and planning**, area **Load Overview**, and selecting the button **Configuration** [ ] in the line of the required load. On the tab **"Name of Load"**, you can configure the properties of the load and time periods for the load. Depending on the selected load type, you can display and configure different load properties on the tab page (see Section 12.3, page 75).

9.7.5 Report Configuration

This page displays whether you have configured any reports to be e-mailed by Sunny Portal, and if so which report types (see Section 14.3, page 90).

9.7.6 User Management

Requirements for displaying the page:

☐ You must have the user role **Installer** or **PV System Administrator** (see Section 16.1, page 107).

This page displays all users created for the Sunny Home Manager system (see Section 16.2, page 108). You can also edit previously created users and, for example, change the user roles or delete users.

10 Page Settings

10.1 Diagram Settings

10.1.1 Setting the Display Period

Depending on the diagram, there are different ways of setting the display period. The control element for setting the display period can be found below each diagram.

Procedure:

- If there is a time bar with a slider below the diagram, keeping the left mouse button pressed, click on the slider and set the desired time period.
- If there is a date and arrow icons below the diagram, set the date using the arrow icons or a calendar:
  - To set the date using the arrow icons, scroll backwards using and scroll forwards using to select the desired date.
  - To set the date using the calendar, click on the date between the arrow icons and select the desired date.
- If there are drop-down lists between the arrow icons, select the desired time period in the drop-down lists.

10.1.2 Saving Diagram Data

You can save diagram data as csv files.

Requirement:

☐ You must have the user role **Installer** or **PV System Administrator** (see Section 16.1, page 107).

Procedure:

1. If you can see the gearwheel icon on the right below the diagram, move the mouse pointer onto and select in the drop-down menu.
2. If there are two icons on the right below the diagram, select .
3. Select [**Save**].
4. Select the target directory.
5. Select [**Save**].

10.1.3 Printing Diagram Data

1. Move the mouse pointer onto on the right below the diagram.
   ☑ A drop-down menu opens.
2. Select .
3. Select [**Print**].
4. Select the desired printer and select [**Print**].

10.1.4 Enlarging the View

- If is visible on the right below the diagram, move the mouse pointer onto and select .
- If there are two icons on the right below the diagram, select .

10.1.5 Showing and Hiding the Legend

On the inverter pages below the menu item Devices you can show and hide the diagram legend.

Procedure:

1. Move the mouse pointer onto on the right below the diagram.
   ☑ A drop-down menu opens.
2. To hide the legend, select .
3. To show the legend, select .

10.2 Sorting the System List

By default, the system list is sorted in ascending order in accordance with the specific system yield. You can also sort the system list by other values and in descending order.

Procedure:

- To sort the list by another value, click one of the other blue values in the header.
- To sort the list in descending order, click on the blue value in the header again.

10.3 Showing, Hiding and Sorting Loads

Using the legend below the diagram on the page **Load Balance and Control**, you can show and hide the loads displayed in the diagram and change the stacking order of the loads in the diagram.

- To hide a load, click on the desired load. Loads that have been hidden are no longer displayed in the diagram and are shown in gray in the legend. You can display the load again by re-clicking on the load.
- To show all loads that have been hidden, select **Show all** below the legend.
- To change the stacking order in the diagram, select the desired load and, holding down the left mouse button, drag it to the desired position in the legend.

10.4 Publishing Pages

10.4.1 Releasing Pages for Viewing in Sunny Portal

If you release pages for viewing in Sunny Portal, other Sunny Portal users will be able to view the pages.

You can release the following pages for viewing in Sunny Portal:

- PV system profile
- Energy and power
- Annual comparison

Requirement:

☐ You must have the user role **Installer** or **PV System Administrator** (see Section 16.1, page 107).

Procedure:

1. Select the desired page in the page and menu selection.
2. In the Contents area, select [**Configuration - "Name of the page"**].
3. In the area **Approval**, activate the checkbox **Also release page on www.sunnyportal.com**.
4. To send the page by e-mail, select **Send the page by e-mail**, enter the e-mail address of the recipient, select [**Send e-mail**], and select .
5. Select [**Save**].

10.4.2 Presenting Sunny Portal Pages on the Internet

Each of your Sunny Portal pages has its own URL. Using these URLs, you can set a link to your Sunny Portal page on other websites.

You can link other websites to the following pages:

- PV system profile
- Energy and power
- Annual comparison

Requirement:

☐ You must have the user role **Installer** or **PV System Administrator** (see Section 16.1, page 107).

Procedure:

1. Select the desired page in the page and menu selection.
2. In the contents area, select [**Configuration - "Name of the page"**].
3. To view a preview of the page, select **Open page in a new window**.
4. Copy the URL from the **URL of the Page** field onto the clipboard.
5. Copy the URL from the clipboard to a program for creating websites (e.g. Microsoft Office Frontpage) or integrate it into your own website by means of an inline frame.

11 Device Settings

11.1 Filtering the Device Overview

You can find individual devices more easily if you filter the device overview.

Requirement:

☐ You must be a **Standard user**, **Installer** or **PV system administrator** (see Section 16.1, page 107).

Procedure:

1. Select **Configuration > Device overview** in the page and menu selection.
2. Set one or more of the following filters:

Text field or drop-down list	Explanation
Device name	Complete name of the device or parts of the device name
Serial number	Complete device serial number or parts of the serial number
Product group	Device class sought, e.g. **PV inverter**, **Sunny Home Manager**.
Data collection	• **All**: searches for activated and deactivated devices • **Activated**: only searches for activated devices • **Deactivated**: only searches for deactivated devices

3. Select [**Refresh**]. Tip: you can sort the devices in the device overview in ascending or descending order by clicking the blue entry in the table header (**Device Name**, **Serial Number**, **Product Group**, **Data Collection**).
4. To clear the filter, select [**Reset**].

11.2 Calling Up the Properties of a Device

The tab with the device properties displays information on each device. Depending on the device and the device settings, various device properties can be displayed on this tab.

Requirement:

☐ You must be a **Standard user**, **Installer** or **PV system administrator** (see Section 16.1, page 107).

Procedure:

1. Select **Configuration > Device overview** in the page and menu selection.
2. In the row for the device and the **Properties** column, select .

11.3 Calling Up the Device Parameters

The parameters of a device are described in the respective device manual. The device parameters on this page can only be read but not changed. If you want to change the parameters of devices in the Sunny Home Manager system, use the Sunny Explorer software (see Sunny Explorer help). You can obtain Sunny Explorer free of charge at www.SMA-Solar.com. You cannot change parameters of the Sunny Home Manager via Sunny Explorer, but only via Sunny Portal.

Requirement:

☐ You must be a **Standard user**, **Installer** or **PV system administrator** (see Section 16.1, page 107).

Procedure:

1. Select **Configuration > Device overview** in the page and menu selection.
2. In the device line and the **Parameters** column, select .
   ☑ You can read off the parameters in the parameter list.
   ✖ The displayed parameters are not up to date?
   Device parameters may have been changed using the Sunny Explorer software, but due to connection problems, the changes are not displayed in Sunny Portal.
   - Update parameters (see Section 11.4, page 67).
3. To display changes to the parameters, select in the column **History**.

11.4 Updating Parameters

It is advisable to update the parameters in the following case:

- Device parameters have been changed via the Sunny Explorer software, but the changes are not displayed in the Sunny Portal.

Requirement:

☐ You must have the user role **Installer** or **PV System Administrator** (see Section 16.1, page 107).

Procedure:

1. Select **Configuration > Device overview** in the page and menu selection.
2. Select [**Update parameters**].
3. In the device line and the **Parameters** column, select .
   ☑ You can read off the current parameters in the parameter list.
   ✖ The current parameters are still not displayed in the parameter list?
   The time from which the updated parameters will be displayed depends on the configured data request interval (see Section 11.7, page 68). The Sunny Home Manger may not yet have transferred the updated parameters to Sunny Portal.
   - Call up the parameter list again later.

11.5 Reading Off the Software Package Version

Requirement:

☐ You must be a **Standard user**, **Installer** or **PV system administrator** (see Section 16.1, page 107).

Procedure:

1. Select **Configuration > Device overview** in the page and menu selection.
2. In the device line and the **Parameters** column, select .
   ☑ You can read off the software package version in the parameter list.

11.6 Configuring the Energy Meter

Requirement:

☐ You must have the user role **Installer** or **PV System Administrator** (see Section 16.1, page 107).

Procedure:

1. Call up the device properties of the Sunny Home Manager (see Section 11.2, page 66).
2. Select [**Edit**].
   ☑ The menu for setting the device properties opens.
3. In the **Meter Configuration** area, select the desired feed-in and purchased electricity meter or PV production meter from the drop-down list (see Section 7.2, page 33).

11.7 Setting the Data Request Interval

The data request interval defines how often the Sunny Home Manager sends data to and requests date from Sunny Portal.

Sunny Portal can only display current data of the Sunny Home Manager and switch radio-controlled sockets if the data request interval is set to **Automatic**.

SMA Solar Technology AG only recommends setting the data request interval to **Hourly** or **Daily** if your Internet connection is established via a GSM modem. This way, depending on your GSM tariff, you will avoid additional costs.

NOTICE

Additional costs when using a cellular modem

If you set up the Internet connection using a cellular modem (e.g. a GSM modem), additional costs can be incurred as a result of frequent data requests, depending on the mobile service tariff.

- When using a cellular modem, additional costs can be prevented by setting the data request interval to **Hourly** or **Daily**.
- If you are not using a cellular modem, set the data request interval to **Automatic**.

Requirement:

☐ You must have the user role **Installer** or **PV System Administrator** (see Section 16.1, page 107).

Procedure:

1. Call up the device properties of the Sunny Home Manager (see Section 11.2, page 66).
2. Select [**Edit**].
   ☑ The menu for setting the device properties opens.
3. In the area **Data request interval** , select the desired option:

Option	Description
Automatic	The Sunny Home Manager updates data on the pages **Current Status and Forecast** and on the tabs **Current** within a few seconds. The Sunny Home Manager sends data that is displayed on other pages to Sunny Portal within a few minutes (up to a maximum of 15 minutes). If loads are controlled via radio-controlled sockets, you must activate the **Automatic** option.

Option	Description
Hourly	The Sunny Home Manager sends data to and requests data from Sunny Portal hourly. Settings made via Sunny Portal are sent to the Sunny Home Manager within 60 minutes.
Daily	The Sunny Home Manager sends data to and requests data from Sunny Portal every 24 hours. Settings made on Sunny Portal are sent to the Sunny Home Manager within 24 hours.

4. Select [**Save**].

11.8 Activating/Deactivating Automatic Software Updates

If the automatic software update is activated, Sunny Portal regularly checks whether there are update files for the Sunny Home Manager or for the PV system devices. If there are update files, these are automatically downloaded and the devices are updated.

You can activate/deactivate the automatic software update for:

- Sunny Home Manager
- PV system devices

By default, the automatic software update is activated for the Sunny Home Manager and the devices in the PV system.

Requirement:

☐ You must have the user role Installer or PV System Administrator (see Section 16.1, page 107).

Activating/Deactivating the Automatic Software Update for the Sunny Home Manager

1. Call up the device properties of the Sunny Home Manager (see Section 11.2, page 66).
2. Select [**Edit**].
   ☑ The menu for setting the device properties opens.
3. To activate the automatic software update, activate the checkbox **Sunny Home Manager** in the area **Automatically update software**.
4. To deactivate the automatic software update, deactivate the checkbox **Sunny Home Manager** in the area **Automatically update software** .
5. Select [**Save**].

Activating/Deactivating the Automatic Software Update for PV System Devices

1. Call up the device properties of the Sunny Home Manager (see Section 11.2, page 66).
2. Select [**Edit**].
   ☑ The menu for setting the device properties opens.
3. To activate the automatic software update, activate the checkbox **PV system devices** in the area **Automatically update software**.
4. To deactivate the automatic software update, deactivate the checkbox **PV system devices** in the area **Automatically update software**.
5. Select [**Save**].

11.9 Entering Line Conductors

Sunny Portal can display the line conductor to which each inverter is connected in the device properties. Enter the line conductor you are looking for.

Requirement:

☐ You must have the user role **Installer** or **PV System Administrator** (see Section 16.1, page 107).

Procedure:

1. Select the device properties of the inverter (see Section 11.2, page 66).
2. Select [**Edit**].
   ☑ The menu for setting the device properties opens.
3. In the area **Phase**, activate the checkbox of the line conductor to which the inverter is connected.
4. Select [**Save**].

11.10 Entering the PV Array Power

The PV array power is the maximum power of the PV modules connected to one inverter.

Procedure:

- Calculate the PV array power via the string properties (see Section 15.1, page 96).

  or

- Enter the PV array power manually

SMA Solar Technology AG recommends calculating the PV array power via the string properties. A string describes a group of series-connected PV modules. Normally, a PV system is made up of multiple strings. Each string has specific properties, such as deviation to south (azimuth) or the roof tilt angle.

Entering the string properties provides the following advantages:

- Sunny Portal can determine the PV array power more precisely.
- The Sunny Home Manager can deliver more exact yield forecasts and control loads more efficiently.

Enter the PV array power manually

You can find out the connected PV array power present on each inverter from your installer. Using the PV array power, Sunny Portal can calculate your nominal PV system power (see Section 15.4.2, page 98).

Requirement:

☐ You must have the user role **Installer** or **PV System Administrator** (see Section 16.1, page 107).

i Nominal PV system power required for limiting active power feed-in

You must enter the PV array power correctly to ensure limitation of the active power feed-in to the correct value (see Section 15.9, page 102). If there are changes to the installed PV array power, you will need to adjust this value.

Procedure:

1. Call up the inverter properties (see Section 11.2, page 66).
2. Select [**Edit**].
   ☑ The menu for setting the device properties opens.
3. In the area **Generator capacity**, enter the PV array power in the text field **kWp**.
4. Select [**Save**].

11.11 Changing the Device Name

The serial number of the device is displayed as the default device name.

Requirement:

☐ You must have the user role **Installer** or **PV System Administrator** (see Section 16.1, page 107).

Device name requirement:

☐ The maximum length of the device name is 20 characters.

Procedure:

1. Select the device properties of the device (see Section 11.2, page 66).
2. Select [**Edit**].
   ☑ The menu for setting the device properties opens.
3. Enter a device name in the **Device Name** or **Name of Load** text field.
4. Select [**Save**].

11.12 Changing a Device Description

You can enter an user-defined description for each device. The description of the device is displayed in **Device Properties**.

Requirement:

☐ You must be a **Standard user**, **Installer** or **PV system administrator** (see Section 16.1, page 107).

Procedure:

1. Call up the properties of the device (see Section 11.2, page 66).
2. Select [**Edit**].
   ☑ The menu for setting the device properties opens.
3. Enter a description in the text field **Description**.
4. Select [**Save**].

12 Load Control

12.1 Information on Load Control

A load is a device in a household that is operated with electrical energy. To have a load controlled by the Sunny Home Manager, you must establish a connection between the load and Sunny Home Manager. There are various options for doing this:

Connection option	Explanation
Direct communication	This connection option is only possible for the following devices: • Smart appliances which communicate via cable using a data exchange protocol with the Sunny Home Manager (see Section 12.4, page 82) The load is connected via network cable or WLAN to the local network in which the Sunny Home Manager is also located. Thus, the load can automatically send information on its energy requirement and consumption to the Sunny Home Manager and it can also receive switch-on and switch-off commands from the Sunny Home Manager.
Switching and measuring via radio-controlled sockets	In the Sunny Home Manager system, radio-controlled sockets can switch connected loads on and off. The radio-controlled sockets can also measure the energy consumption of the connected loads and transmit this value to the Sunny Home Manager. For this purpose, the radio-controlled sockets must be assigned as devices to the Sunny Home Manager system (see Section 13.1, page 84). A load can either be permanently connected to the same radio-controlled socket or successively to alternate radio-controlled sockets. For each change, the load must be assigned to the new radio-controlled socket (see Section 12.3.11, page 78). If the load is not assigned to a radio-controlled socket, the Sunny Home Manager cannot control this load or receive any consumption data from this load. Since the Sunny Home Manager does not receive any detailed data on loads if they are controlled via radio-controlled sockets, you will need to make additional settings in the load profiles depending on the respective load type. Thus, the Sunny Home Manager can effectively schedule the loads in the load control and optimize energy and cost savings.

12.2 Configuring Radio-Controlled Sockets

12.2.1 Safety when Configuring Radio-controlled Sockets

⚠ WARNING

Danger to life by switching medical devices

Unintentional switching of medical devices can result in life-threatening situations.

- Do not connect any medical devices to the radio-controlled socket.

⚠ WARNING

Risk of injury and fire due to unintentional and unattended switching on of loads

Loads that are switched on via a radio-controlled socket unintentionally and while unattended can cause injuries and fires (e.g. an iron).

- Do not connect any loads to the radio-controlled socket that could endanger persons or cause damage if unintentionally switched on.

NOTICE

Damage to loads

Frequently switching a load on and off can damage it.

- Ask the load manufacturer whether the load is suitable for control via a radio-controlled socket.
- Configure the radio-controlled socket so that the load connected is not switched on or off more frequently than specified by the load manufacturer.
- Do not connect any loads to the radio-controlled socket if they require a continuous current supply.

12.2.2 Requirements when Configuring Radio-Controlled Sockets

☐ The radio-controlled sockets must be registered in Sunny Portal (see Section 13.1, page 84).

☐ In Sunny Portal, the data request interval must be set to **Automatic** (see Section 11.7, page 68).

☐ You must be a **Standard user**, **Installer** or **PV system administrator** (see Section 16.1, page 107).

12.2.3 Activating/Deactivating Data Collection

You can set whether or not the Sunny Portal is to collect data from the radio-controlled socket. If you would like to control loads via the radio-controlled socket, you must activate data collection. If you deactivate data collection, no radio-controlled socket data is displayed in Sunny Portal and you cannot control any loads via the radio-controlled socket.

Procedure:

1. Call up the properties of the radio-controlled socket (see Section 11.2, page 66).
2. Select [**Edit**].
   ☑ The menu for setting the device properties opens.
3. To activate data collection, activate the checkbox **Active**.
4. To deactivate data collection, deactivate the checkbox **Active**.

12.2.4 Selecting the Load

In order that the radio-controlled socket can be controlled by the Sunny Home Manager, you must assign a load to it. You will first need to create a load profile for the load (see Section 12.3, page 75). If you have already installed a radio-controlled socket without assigning a load, you can subsequently assign this radio-controlled socket to the required load when creating the load profile.

Procedure:

1. Call up the properties of the radio-controlled socket (see Section 11.2, page 66).
2. Select [**Edit**].
   ☑ The menu for setting the device properties opens.
3. Select the connected load from the drop-down list **Loads**.

State of the radio-controlled socket after load operation

Depending on the load type, the radio-controlled socket is either switched on or switched off after load operation.

- Load is program-controlled: switched on
- Load is not program-controlled: switched off

12.2.5 Entering the Device Name

Using the device name, you can identify the radio-controlled socket in the Sunny Home Manager system.

SMA Solar Technology AG recommends keeping the device name that was automatically generated while registering the SMA radio-controlled socket. The serial number of the SMA radio-controlled socket is encoded in the automatically generated device names. This allows the SMA radio-controlled socket to be identified by comparing with the type label.

Procedure:

- Enter the desired device name in the text field **Device name**, for example, **radio-controlled socket washing machine basement**.

12.2.6 Configuring the Operating Mode

You have the following options for setting the operating mode of the radio-controlled socket:

- Setting the Operating Mode via Sunny Portal

  or

- Setting the operating mode via the Sunny Portal mobile app

Setting the Operating Mode via Sunny Portal

Requirements:

☐ The radio-controlled socket must be assigned to the connected load (see Section 12.2.4, page 73).

☐ In Sunny Portal, the data request interval must be set to **Automatic** (see Section 11.7, page 68).

☐ You must be a **Standard user**, **Installer** or **PV system administrator** (see Section 16.1, page 107).

Procedure:

1. Select **Load Balance and Control** in the page and menu selection.
2. Select the **Current** tab.
3. In the table, in the column **Operating mode**, select the button for the desired operating mode next to the required load.
4. Select the desired operating mode:

Operating mode	Explanation
automatically	Control of the SMA radio-controlled socket by the Sunny Home Manager Depending on the current control command of the Sunny Home Manager, the SMA radio-controlled socket is either switched on or off in this mode. This operating mode cannot be set for the load type **Measure only**

Operating mode	Explanation
Switch on	No control of the SMA radio-controlled socket by the Sunny Home Manager The SMA radio-controlled socket is switched on and switches to the operating mode **On**. The connected load can draw electric current.
Switch off	No control of the SMA radio-controlled socket by the Sunny Home Manager The SMA radio-controlled socket is switched off and switches to the operating mode **Off**. The connected load cannot draw electric current.

☑ After a short time, the selected operating mode is shown as activated on the Sunny Portal user interface.

12.3 Configuring Loads

12.3.1 Calling Up the Properties of a Load

The tab "**Name of Load**" on page **Load Overview and Planning** displays the properties of the load. Depending on the selected load type, you can display and configure different load properties on the tab.

Requirement:

☐ You must be a **Standard user**, **Installer** or **PV system administrator** (see Section 16.1, page 107).

Procedure:

1. Select **Configuration > Load Overview and Planning** in the page and menu selection.
2. Select ⚙ in the line of the load under the column **Configuration**.

☑ The menu for setting the load properties opens.

12.3.2 Changing the Color Selection for Loads

The loads are displayed in different colors in the diagrams for better visualization. The individually assigned color can be changed if necessary.

Procedure:

1. In the load list below the diagram, select the color field for the desired load.
   or
   Call up the load properties (see Section 12.3.1, page 75), select [**Edit**] and then select the drop-down list **Load color**.
   ☑ A window for color selection opens.
2. Select the preferred color.
3. Select [**OK**].

12.3.3 Selecting the Load Icon

1. Call up the load properties (see Section 12.3.1, page 75).
2. Select [**Edit**].
3. Select the desired load icon in the **Load icon** drop-down list to use a standard load icon.
4. To use your own load icon, perform the following steps:
   - Select [**Upload load icon**].
     ☑ A file selection window opens.
   - Select the desired file (permitted file formats: JPG, JPEG, PNG, GIF, BMP).

- Select [**Open**].

☑ The file is uploaded and then displayed in the drop-down list **Load icon** as the selected new load icon.

5. Select [**Save**].

12.3.4 Selecting the Load Type

The settings that are possible for the load depend on which load type you select.

Procedure:

1. Call up the load properties (see Section 12.3.1, page 75).
2. Select [**Edit**].
3. In the drop-down list **Type of Load**, select the desired load type:

Type of load	Explanation
Self-configured	You configure the connected load individually. With this type of load, you must also state whether the load is program-controlled or if its operation can be interrupted at any time (see Section 12.3.5, page 76). Example of program-controlled load: dryer Example of load where operation can be interrupted: pond pump
Dishwasher	The connected load is a dish washer.
Washing machine	The connected load is a washing machine.
Energy monitoring (measuring only)	Only the power consumption of the connected load is to be measured.
Stiebel Eltron WWK 300	The load connected is a heat pump from the Stiebel Eltron WWK electronic range. Some settings are not visible because they were set by the manufacturer to predefined values specifically for this device, and therefore cannot be changed.
Tecalor TTA 300	The load connected is a heat pump from the Tecalor TTA electronic range. Some settings are not visible because they were set by the manufacturer to predefined values specifically for this device, and therefore cannot be changed.
Heating element	The load connected is a heating element.

12.3.5 Selecting Program Controllability

With load type **Self-configured**, you must specify whether the load must run predefined programs or not.

Procedure:

- In the field **Programmability**, activate the required checkbox:

Setting	Explanation
Yes	After the start, the load runs through a defined program. Interrupting the load during the course of the program can affect the operation result and should therefore be avoided. Example: dryer
No	The load always carries out the same function during operation. Multiple switching on and off per day does not cause any problems. The load does not have to run permanently - as long as a minimum operation time per day is achieved, interruption of operation has no negative effect on the function being carried out. Examples: pond pump, heating element, water heater

12.3.6 Entering the Load Name

Using the load name, you can identify the loads in the Sunny Home Manager system.

Load name requirement:

☐ The load name can have a maximum of 23 characters.

Procedure:

- Enter a load name in the text field **Name of Load**, e.g. **Washing machine basement**.

12.3.7 Entering the Power Consumption

The power consumption is the average power typically required by a load for operation (see load manual).

The Sunny Home Manager takes account of this value in the initial calculation of the required energy.

Once the load provides measured values of its actual consumption during operation, the Sunny Home Manager can determine a more precise power value after a learning phase. This way, the Sunny Home Manager gradually improves its load planning and increases energy and cost savings.

Procedure:

- Enter the power of the load connected in the text field **Power Consumption**.

12.3.8 Entering the Maximum Program Operating Time

The maximum program runtime is the time that a program-controlled load requires for its longest program. The maximum program operating time defines the latest time at which a load must be switched on so that its longest program can be completed within the specified time limits.

Example: Maximum program operating time for a washing machine

You have defined a time slot from 10:00 a.m. to 6:00 p.m. for your washing machine (see Section 12.3.15, page 80), i.e. your washing machine's washing cycle must be completed by 6:00 p.m.

The longest washing cycle of your washing machine lasts three hours. Therefore, enter at least **three hours** as the maximum program runtime when configuring the radio-controlled socket. In this case, the washing machine will start at 3:00 p.m. at the latest so that the longest washing cycle can be completed. If the selected washing cycle is of shorter duration, the Sunny Home Manager still adheres to the maximum program runtime.

Requirement:

☐ The connected load must be program-controlled (see Section 12.3.5, page 76).

Procedure:

Enter the maximum program operating time for the load connected in the **Max. Program Operating Time** text field (see the load manual).

12.3.9 Entering the Minimum Switch-On Time

The minimum switch-on time is the minimum time that the load connected must remain switched on, for example, to complete its starting sequence or complete a work sequence.

Requirement:

☐ The connected load must be program-controlled (see Section 12.3.5, page 76).

i Delayed activation for some loads possible

Some loads may not start to operate immediately after switching on the radio-controlled socket, e.g. heat pumps for water storage tanks. Immediate activation can only be ensured for the radio-controlled socket, not for the connected loads.

Procedure:

- Enter the minimum switch-on time in the **Minimum Switch-on Time** text field. Take into consideration any possible delays in starting the connected load.

12.3.10 Entering the Minimum Switch-Off Time

The minimum switch-off time is the minimum time the connected load must remain switched off, for example, to prevent overheating or enable fault-free restarting.

Requirement:

☐ The connected load must be program-controlled (see Section 12.3.5, page 76).

Procedure:

- Enter the minimum switch-off time in the text field **Minimum Switch-off Time**.

12.3.11 Assigning Radio-Controlled Sockets

For the following reasons, you must assign the radio-controlled socket to the load to which it is connected:

- to have the load controlled by the Sunny Home Manager
- to enable the Sunny Home Manager to save the data of the load

If the load was temporarily not assigned to any radio-controlled socket, corresponding data gaps will appear in the consumption diagrams. The consumption data can always be called up on the load itself, even if the load is now controlled by a different radio-controlled socket.

Procedure:

- In the drop-down list **Radio-controlled socket**, select the radio-controlled socket to which the load is connected. By default, no radio-controlled socket is assigned to the load.

  If the desired radio-controlled socket is already assigned to a different load, a "*" will be displayed in front of the name of the radio-controlled socket. In order to be able to reassign the radio-controlled socket, you must first remove the assignment of the radio-controlled socket in the profile of the other load.

12.3.12 Setting Measuring and Switching of the Radio-Controlled Socket

- In the drop-down list **Measuring and switching**, select the required setting.

Setting	Explanation
Radio-controlled socket is to measure and switch (intelligent power consumption)	The load draws electric current via the radio-controlled socket. Using the consumption values measured by the radio-controlled socket, the Sunny Home Manager "learns" how much power the load typically consumes. This information flows into the load control of the Sunny Home Manager.
Radio-controlled socket is only to switch, not measure (fixed power consumption)	The load is switched e.g. via a relay which is connected to the radio-controlled socket. Using the connected relay, the radio-controlled socket switches the load only in accordance with the configuration (time period) and the specifications of the Sunny Home Manager. The value that is entered in the load profile in the field **Power Consumption** is the power consumption factored in for planning the load control.

12.3.13 Setting Automatic Switch-Off

If the load has internal automatic switch-off, you must provide additional information in order that the radio-controlled socket can detect whether the load is in operation or in standby mode.

Example: Heating element with automatic switch-off

A heating element heats the water in a hot water tank. An integrated thermostat ensures that the heating element is switched off automatically above a specific defined target temperature. The heating element is controlled via a radio-controlled socket.

Within the time period defined for the heating element (see Section 12.3.15, page 80), it is switched on and off depending on the availability of PV energy. If the automatic switch-off is activated and the water has not yet reached the set temperature at the end of the time period, the heating element can continue to draw electric current from the radio-controlled socket even though the time period has expired, until the target temperature is reached and the heating element has switched to standby mode on its own. The Sunny Home Manager recognizes the standby mode of the heating element and switches the radio-controlled socket off.

Requirement:

☐ The load must not be program-controlled.

Procedure:

1. In the field **Load has internal automatic switch-off**, activate the checkbox **Yes**.
2. If required, in the text field **Threshold for disconnection**, adjust the preset threshold for the power consumption in standby mode (refer to the load manual for information on power consumption during standby mode). Tip: Typically the threshold is approximately 50% of the average power consumption in operation.
3. If required, in the text field **Detection time for disconnection recognition**, adjust the preset time period for which the threshold of the power consumption must at least be exceeded in order to detect standby mode.

12.3.14 Setting the Priority of the Load

The priority determines which load should be switched on preferentially in the event of conflicts.

The priority will only be considered for the following loads:

- Smart appliances with optional energy absorption. You will have already set the priority of these devices when adding them to your Sunny Home Manager system via the configuration wizard.
- Loads connected to radio-controlled sockets for which you have set time periods of type **Load can be switched on** (see Section 12.3.15, page 80). In the case of the time period type **Load must be switched on**, the priority of the load does not have any effect, as the load is switched on in any event.

Example: Conflict between two loads

Two loads, for which you have configured an optional time period in each case, should only be switched on if excess PV energy is available. As the amount of surplus PV energy is currently only sufficient for one load, however, the load with the higher priority is switched on. If both loads have the same priority, the load with the higher level of consumption is switched on first.

Procedure:

- Set the slider to the desired level.

12.3.15 Configuring the Time Period

The time period defines in which time period the Sunny Home Manager can or must switch the loads on. The configuration of time periods is only possible for loads that are connected to radio-controlled sockets. You can set several time periods for each load.

By default, a daily time period is set so that the load is switched on within the time period (load MUST be switched on). The time periods configured are shown as colored bars in the **Time period overview**:

Color	Explanation
Dark blue	Compulsory time period
Light blue	Optional time period
Red	Invalid time period configuration It is possible that the time period overlaps other, already configured time periods, or that the time period is too short for the entered minimum switch-on time of the load.

Shorter electrical endurance of the radio-controlled socket through the frequent switching of loads

The more often the radio-controlled socket switches loads on and off, the shorter the electrical endurance of the radio-controlled socket.

- When setting time periods and device operating times, ensure that the radio-controlled socket does not have to switch loads on and off unnecessarily (for the electrical endurance of the radio-controlled socket, see Section "Technical Data" in the installation manual of the Sunny Home Manager).

Selecting the Time Period Type "Load Can Be Switched on" or "Load Must Be Switched On"

This setting determines whether the load will definitely be switched on during the time period or only if certain conditions have been met.

When you select the option **Load can be switched on**, you must subsequently configure the conditions for switching on the load.

Procedure:

1. Select **Configuration > Load Overview and Planning** in the page and menu selection.
2. In the line of the desired load, in the column **Configuration**, select ⚙.
3. In the tab **Name of Load**, select the button [**Edit**].
4. Select [**Configure time period**].
5. If the load must definitely be switched on within the time period, select **Load must be switched on** (default setting).
6. If the load is only to be switched on under certain conditions within the time period, select **Load can be switched on**.
   ☑ The window **Load will be switched on depending on** opens.
7. Select the option **Maximum permitted energy costs** or the option **Proportion of PV energy** and set the slider to the desired value (see Section **Time Period Type "Load can be switched on": Configuring the Conditions for Switching on the Load**).

Time Period Type "Load Can be switched on": Configuring the Conditions for Switching on the Load

The Sunny Home Manager can switch on the load depending on the proportion of PV energy or depending on the maximum permissible energy costs.

Optional time period: In some cases, the load is not switched on

If the configured proportion of PV energy is not attained or the maximum permissible energy costs are exceeded, it is possible that the load will not receive any energy in the optional time period and the radio-controlled socket is not switched on.

Proportion of PV energy:

You can set the load to be switched on only if a certain minimum proportion of PV energy is available to operate the load. If the function **Limiting of the active power feed-in** is activated (see Section 15.9, page 102), you can also set the proportion of surplus PV energy that would otherwise be derated.

Example: Operating loads with at least 50% PV energy

A washing machine is only to be switched on if 50% of the washing machine's energy requirement can be covered by PV energy.

- The slider is set to **50%**. Only if enough PV energy is available, the washing machine is switched on.

Maximum permitted energy costs:

Maximum permissible energy costs You can set the maximum permissible energy costs for operation of the load. The price range of the slider is based on the highest and the lowest possible energy costs, e.g. the highest energy costs for operation exclusively with expensive grid current and the lowest energy costs for operation exclusively with PV energy, the cost of which is calculated based on the feed-in tariff less the self-consumption tariff. In addition, if **Limiting of the active power feed-in** is activated, surplus PV energy can be taken into account which is free, as it would otherwise be derated.

Example: Operating the load exclusively with free energy

A pond pump should only be switched on if there is more PV energy available than is permitted to be fed into the utility grid.

- The slider is set to **0 Euro/kWh**. When enough surplus PV energy is available, the pond pump will be switched on.

Adding an Additional Time Period

If a load is not to run throughout the day, but rather at predefined intervals (e.g. pond pump), you must add several consecutive time periods for this day. Here, the number of time periods equates to the number of intervals in which the load is to run.

Procedure:

1. Select **Configuration > Load Overview and Planning** in the page and menu selection.
2. In the line of the desired load, in the column **Configuration**, select .
3. In the tab **Name of Load**, select the button [**Edit**].
4. Select [**Configure time period**].
5. Select **Add time period** .
   ☑ A new time period with the corresponding number will be displayed in the **Time period overview**.
6. Make the desired settings.
7. Select **[Accept]**.
8. Select [**Save**].

Changing the Time Period

1. Select **Configuration > Load Overview and Planning** in the page and menu selection.
2. In the line of the desired load, in the column **Configuration**, select .
3. In the tab **Name of Load**, select the button [**Edit**].
4. Select [**Configure time period**].
5. In the window **Configure time period**, make the desired changes for the time period.
6. Select **[Accept]**.
7. Select [**Save**].

Deleting a Time Period

You cannot delete all the time periods for a load. At least one time period must always be configured for each load. If no radio-controlled socket is assigned to the load, however, the time period has no effect on the operation of the load.

Procedure:

1. Select **Configuration > Load Overview and Planning** in the page and menu selection.
2. In the line of the desired load, in the column **Configuration**, select .
3. In the tab **Name of Load**, select the button [**Edit**].
4. Select [**Configure time period**].
5. Select for the desired time period and confirm the security prompt.
6. Select **[Accept]**.
7. Select [**Save**].

12.4 Directly Controlling Loads

Controlling Smart Appliances

Some loads can communicate directly with the Sunny Home Manager. You will find a list of supported products in the Sunny Home Manager installation manual.

The loads send information via Ethernet or WLAN on the load type, the planned energy requirement, and the preferred operating time period to the Sunny Home Manager.

The Sunny Home Manager factors this information into its load control, and also taking the configured optimization targets you configured in the context of load control, sends appropriate start and stop signals to the loads.

Requirements:

☐ You must have the user role **Installer** or **PV System Administrator** (see Section 16.1, page 107).

☐ The load must support the data exchange protocol EEBus/SPINE or the data exchange protocol SEMP (see the manual of the load and technical information at www.SMA-Solar.com).

Procedure:

1. Connect the load to the local network and carry out the manufacturer-specific registration (see manual of the load). The load must be located in the same local network as the Sunny Home Manager.
   ☑ The Sunny Home Manager detects the new load in the local network.
   ☑ The load is displayed on the page **Device Overview > Overview of New Devices**.
2. Add the load to the the Sunny Home Manager system. In the case of loads with optional energy consumption, you can also set the priority and the maximum permissible energy costs.
   ☑ The new load is automatically displayed on the page **Load Overview and Planning** with the available information and setting options.
3. Change the load name if necessary (see Section 12.3.6, page 77).

13 System Management

13.1 Adding or Replacing Devices

You can add devices to your Sunny Home Manager system or replace devices.

You have to capture the new device with the Sunny Home Manager.

If you need to replace the Sunny Home Manager, you must use the PV System Setup Assistant (see Section 13.3, page 85).

General requirements:

☐ You must have the user role **Installer** or **PV System Administrator** (see Section 16.1, page 107).

Requirement for SMA devices:

☐ For the new SMA device, the default password **1111** for the user group **Installer** or the system password of the existing system must be set (see Section 17.3, page 110).

☐ The new device must be in operation.

☐ The data request interval must be set to Automatic (see Section 11.7, page 68).

i Device replacement: The old device must NOT be deleted, but deactivated

If you delete the device that you wish to replace from Sunny Portal, all the device data is irretrievably deleted.

- To retain the data of the old device in Sunny Portal, do not delete the old device, but deactivate it (see Section 13.2, page 85).
- Add the new device as an additional device to the Sunny Home Manager system (system extension).

i Smart appliances cannot be replaced

Smart appliances which communicate via a data exchange protocol with the Sunny Home Manager cannot be replaced in Sunny Portal.

- To retain the data of the old load in Sunny Portal, do **not** delete the old load, but deactivate it (see Section 13.2, page 85).
- Add the new load as an additional device to the Sunny Home Manager system (system extension).

i Password for Edimax smart plug switches

All Edimax smart plug switches in the system must have the same password. If there are different passwords for the smart plug switches, the Sunny Home Manager cannot control all smart plug switches.

Procedure:

1. **Go to www.SunnyPortal.com**.
2. Log into Sunny Portal (see Section 7.3, page 38).
3. Select **PV System Selection > "My Sunny Home Manager system"** in the page and menu selection.
4. If you would like to replace a device in Sunny Portal, deactivate the old device (see Section 13.2, page 85).
5. Select **Device overview > Overview of new devices** in the page and menu selection.
6. Select [**Refresh devices**]. The Sunny Home Manager then searches for new devices in the local network.
   ☑ After a maximum of one minute, all new devices are displayed.
   ✖ None or not all of the new devices are displayed?
   An error has occurred.
   - Eliminate the error (see Section 18, page 112).
7. To add a device, select ⊞ in the line of the device.

8. To replace a device, select ⇄ in the line of the new device.
   ☑ The Sunny Home Manager connects to the new device. Page 2 of the configuration wizard opens.
   ✖ Page 2 of the configuration wizard does not open but the error message **Connection Failed** is displayed?
   A password other than 1111 or other than the system password of the existing system is set for the new SMA device.
   - Temporarily change the system password of the existing system to the password of the new SMA device (see Section 17.3, page 110).
9. Follow the instructions of the configuration wizard.
10. **Replacing an inverter**
    It can take up to 20 minutes to replace an inverter using the configuration wizard.
    ☑ The new SMA device is displayed under **Configuration > Device overview**.
    ☑ The new device connected via Ethernet is displayed under **Configuration > Load overview and planning**.
11. If you have just changed the system password of the existing system to the password of the new SMA device, reset the old system password (see Section 17.3, page 110).
12. If the new device is a radio-controlled socket, configure the radio-controlled socket (see Section 12.2, page 72). Remember that the load connected to the radio-controlled socket must be configured first (see Section 12.3, page 75).

13.2 Activating/Deactivating Devices

In the following cases, you must deactivate devices in Sunny Portal:

- You have removed a device from your PV system

  or

- You no longer wish to display a device in Sunny Portal

  or

- You would like to replace the device in Sunny Portal by another device (see Section 13.1, page 84).

The data of the deactivated device is retained in Sunny Portal.

Requirement:

- You must have the user role **Installer** or **PV system administrator** (see Section 16.1, page 107).

Procedure:

1. Select the device properties of the device (see Section 11.2, page 66).
2. Select [**Edit**].
   ☑ The menu for setting the device properties opens.
3. To deactivate the device in Sunny Portal, deactivate the checkbox **Active** in the area **Data collection**.
4. To activate the device in Sunny Portal, activate the checkbox **Active** in the area **Data collection**.
5. Select [**Save**].

13.3 Replacing the Sunny Home Manager

Requirements:

☐ The NetID of the PV system must be set in the Sunny Home Manager (see the installation manual of the Sunny Home Manager).

☐ The new Sunny Home Manager must be connected to the router (see the installation manual of the Sunny Home Manager).

☐ The new Sunny Home Manager must be supplied with voltage (see the installation manual of the Sunny Home Manager).

☐ You must be a **system administrator** (see Section 16.1, page 107).

Procedure:

1. Open **www.SunnyPortal.com** and select PV System Setup Assistant.
   or
   Go to **www.SunnyPortal.com/Register**.
   ☑ The PV System Setup Assistant opens.
2. Select [**Next**].
   ☑ The page **User registration** opens.
3. Activate the checkbox **I am already registered in Sunny Portal**.
4. Enter the e-mail address and the Sunny Portal password in the fields **E-mail address** and **Password**.
5. Select [**Next**].
   ☑ The page **Select PV system** opens.
6. Activate the field **Add or replace devices**.
7. Select ⇄ in the line of the Sunny Home Manager system for which you want to replace the Sunny Home Manager.
8. Select [**Next**].
   ☑ The page **Select devices** opens.
9. Enter the identification key of the Sunny Home Manager in the field **PIC**. Enter the registration ID of the Sunny Home Manager in the field **RID**.
   Useful hint: You can read off the identification key and the registration ID from the type label on the side of the Sunny Home Manager or from the supplied label.
10. Select [**Identify**].
    ☑ Sunny Portal checks whether the identification key and registration ID correspond to the connected Sunny Home Manager.
    ✖ The PV System Setup Assistant cannot find any Sunny Home Manager with the identification key and registration ID?
    An error has occurred.
    - Eliminate the error (see Section 18, page 112).
11. Select [**Next**].
12. Select [**Finish**].

13.4 Reassigning the Sunny Home Manager to the Sunny Portal System after the Reset

If you have performed a complete reset of the Sunny Home Manager, you must reassign the Sunny Home Manager to your Sunny Home Manager system in Sunny Portal. Otherwise, Sunny Portal will not accept any data from the Sunny Home Manager.

You have the following options for reassigning the Sunny Home Manager to your Sunny Home Manager system:

- Reassigning the Sunny Home Manager via the PV System Setup Assistant

  or

- Reassign the Sunny Home Manager via the Sunny Portal access (see Section 13.3, page 85)

Reassigning the Sunny Home Manager to the Sunny Home Manager System via the PV System Setup Assistant

Requirement:

☐ You must be a **system administrator** (see Section 16 "User Management", page 107).

Procedure:

1. Open **www.SunnyPortal.com** and select [**PV System Setup Assistant**].
   or
   Go to **www.SunnyPortal.com/Register**.
   ☑ The PV System Setup Assistant opens.
2. Select [**Next**].
   ☑ The page **User registration** opens.
3. Activate the checkbox **I am already registered in Sunny Portal**.
4. Enter the e-mail address and the Sunny Portal password in the fields **E-mail address** and **Password**.
5. Select [**Next**].
   ☑ The page **Select PV system** opens.
6. Activate the field **Add or replace devices**.
7. In the line of the Sunny Home Manager system to which you would like to reassign the Sunny Home Manager, select ⇄.
8. Select [**Next**].
   ☑ The page **Select devices** opens.
9. Enter the identification key of the Sunny Home Manager in the field **PIC**. Enter the registration ID of the Sunny Home Manager in the field **RID**.
   Useful hint: You can read off the identification key and the registration ID from the type label on the side of the Sunny Home Manager or from the supplied label.
10. Select [**Identify**].
    ☑ Sunny Portal checks whether the identification key and registration ID correspond to the connected Sunny Home Manager.
    ✖ The PV System Setup Assistant cannot find any Sunny Home Manager with the identification key and registration ID?
    An error has occurred.
    - Eliminate the error (see Section 18 "Troubleshooting", page 112).
11. Select [**Next**].
12. Select [**Finish**].

13.5 Deleting a Device from Sunny Portal

Requirement:

☐ You must have the user role **Installer** or **PV System Administrator** (see Section 16.1, page 107).

i Device data is irretrievably deleted

If you delete a device, all the data of that device is irretrievably deleted.

- Check whether it is sufficient to deactivate the device (see Section 13.2, page 85).

Procedure:

1. Select the device properties of the device (see Section 11.2, page 66).
2. Select [**Edit**].
3. Select [**Delete**].
   ☑ A window with a security prompt opens.
4. To irretrievably delete the device, select [**Delete**].

13.6 Deleting the Sunny Home Manager System

Requirement:

☐ You must have the user role **Installer** or **PV System Administrator** (see Section 16.1, page 107).

If you delete the Sunny Home Manager system, the system and its data will be permanently deleted.

Procedure:

1. Select **Configuration > PV system properties** in the page and menu selection.
2. Select [**Edit**].
3. In the PV system data area, select [**Irretrievably delete PV system**].
   ☑ A security prompt opens.
4. Select [**Yes**] to permanently delete the Sunny Home Manager system.

Assigning the Sunny Home Manager to another system

To enable assignment of the Sunny Home Manager to another system, you must perform a complete reset of the Sunny Home Manager (see the installation manual of the Sunny Home Manager).

14 System Monitoring

14.1 PV System Monitoring Options

With the Sunny Home Manager, you can carry out essential monitoring of your PV system.

Monitoring of:	Option in Sunny Portal	See
Events of the system	**PV System Logbook** You can view messages regarding events of your PV system.	Section 14.2, page 89
	Report configuration You receive e-mails with the events of your system.	
Yield, power, and CO_2 avoided	**Report configuration** You receive e-mails with your plant data.	Section 14.3, page 90
Inverter yields	**Inverter comparison** You will be notified by e-mail if the specific yield of an inverter is outside the set tolerance range.	Section 14.5, page 94
Communication between the Sunny Home Manager and the Sunny Portal	**Communication monitoring** You are notified by e-mail if the Sunny Home Manager does not communicate with Sunny Portal within the set time.	Section 14.4, page 93

If you require more detailed system monitoring functions and more comprehensive data storage, you have the option of activating additional functions via the SMA Online Store subject to a fee. If you do not yet have access to the SMA Online Store, please contact your distributor.

14.2 PV System Logbook

14.2.1 Calling Up and Filtering Messages

Messages help you, for instance, to detect disturbances in your PV system. The following message types are available:

- Info
- Warning
- Disturbance
- Error

Requirement:

☐ You must be a **Standard user**, **Installer** or **PV system administrator** (see Section 16.1, page 107).

Calling Up Messages

- Select **PV System Logbook** in the page and menu selection.

Filtering Messages

You can filter messages in the system logbook to only call up certain messages.

Procedure:

1. Select **PV System Logbook** in the page and menu selection.
2. To filter messages, set one or more of the following filters:

Input field or drop-down list	Explanation
Go to	• Enter the date for the messages you would like to display. Tip: click the calendar icon and select a date in the calendar.
Status	• To display all unconfirmed messages, select **Not approved**. • To display all confirmed messages, select **Approved**. • To display all messages, select **All**.
System/Devices	• To display the messages in Sunny Portal, the Sunny Home Manager system and the devices, select **All**. • To display Sunny Portal messages, select **Portal**. • To display messages of the Sunny Home Manager system, select **PV System**. • To display messages of specific devices, select the respective device (e.g. **SB 4200TL**).
Number per page	• Select the number of messages that you would like to see.
Type	• To display messages of a specific type, activate the appropriate checkbox **Info**, **Warning**, **Failure** or **Error**.

14.2.2 Confirming Messages

You can confirm messages in order to mark them as read. This will help you to differentiate between old and new messages.

Requirement:

☐ You must be a **Standard user**, **Installer** or **PV system administrator** (see Section 16.1, page 107).

Procedure:

1. Select **PV System Logbook** in the page and menu selection.
2. To confirm messages individually, select ✖ in the message line and the column **Confirmed**.
3. To confirm several messages, mark the required messages:
   - To select individual messages, activate the relevant checkboxes on the left of the messages.
   - To select all messages, activate the checkbox **Select all**.
4. Select [**Execute**].

14.3 Reports

14.3.1 Report Overview

Reports are documents containing system data or system events. You can have the reports sent by e-mail from Sunny Portal.

You can have the e-mails sent as a text message through your mobile service provider or forwarded as a text message from your e-mail account.

Report	Possible content
Daily info report	• Daily yield (kWh) • Today's maximum power • CO_2 avoided (kg) • Diagram of the page **Energy Balance** for the day*
Monthly info report	• Monthly yield (kWh) • Monthly maximum power • Monthly CO_2 avoided • Diagram of the **Energy balance** page for the month*
Event report	• Information • Warnings • Failures • Error

* if configured in the report to be sent as a PDF

14.3.2 Configuring Reports

The following report types are available:

- Info reports: contain system data and are sent at regular intervals.
- Event reports: notify you when certain system events occur.

Requirement:

☐ You must have the user role **Installer** or **PV System Administrator** (see Section 16.1, page 107).

Configuring Info Reports

You can configure three "Daily info reports" and three "Monthly info reports", each with different content.

Sunny Portal sends you the "Daily info reports" when it has processed all the data from the previous day and the "Monthly info report" at the end of the month.

Requirement:

☐ You must have entered the CO_2 avoided factor (see Section 15.12, page 104).

Procedure:

1. Select **Configuration > Report configuration** in the page and menu selection.
2. In the drop-down list **Report Configuration**, select a **Daily info report** or a **Monthly info report**.
3. Select [**Edit**].
4. Configure the report:

Range	Explanation
Activate report	• Activate the checkbox **Active**.

Range	Explanation
Recipient	• Enter the e-mail address(es) of the recipient(s) in the text field **E-mail address(es)**. If you enter several e-mail addresses, separate these by commas.
Content	• In the area **Select channel(s)**, activate the content that is to be displayed in the e-mail. • In the area **Send report as**, select the format in which Sunny Portal is to send the report. If Sunny Portal is to send a Sunny Portal page along with the report, select a page in the drop-down list in the area **Portal Page to Be Sent**. • If Sunny Portal is not to send a Sunny Portal page along with the report, select **Send no page**.

5. To send a test report to the stated e-mail address, select [**Send test report**].
6. Select [**Save**].

Configuring Event Reports

You can configure three event reports, each with different content.

Sunny Portal sends you the event reports at the times set.

Procedure:

1. Select **Configuration > Report configuration** in the page and menu selection.
2. In the drop-down list **Report configuration**, select an **Event report**.
3. Select [**Edit**].
4. Configure the report:

Range	Explanation
Activate report	• Activate the checkbox **Active**.
Recipient	• Enter the e-mail address(es) of the recipient(s) in the text field **E-mail address(es)**. If you enter several e-mail addresses, separate these by commas.

Range	Explanation
Interval	• To receive an e-mail with event report every hour, activate the option **Hourly**. • To receive one e-mail with event report per day, activate the option **Daily** and, in the drop-down list, select the time you would like to receive the e-mail.
Content	You can select up to four Sunny Portal and Sunny Home Manager system event types: **Information**, **Warnings**, **Failures**, **Errors**. • Activate the content that is to be displayed in the e-mail. • In the area **Send Report as**, select the format in which Sunny Portal is to send the report. • In the area **Limit messages in one report**, use the drop-down list to select the maximum number of messages to be displayed in the e-mail. • If you wish to send reports even if there are no new events, activate **Send empty reports if no new events are available**.

5. To send a test report to the stated e-mail address, select [**Send test report**].
6. Select [**Save**].

14.3.3 Creating a Report for a Specific Date

You can create a report for a specific date in the past.

Requirement:

☐ You must have the user role **Installer** or **PV System Administrator** (see Section 16.1, page 107).

Procedure:

1. Select **Configuration > Report configuration** in the page and menu selection.
2. Select the desired report in the drop-down list **Report configuration**.
3. In the field **Report Date** in the area **Regenerate Report Manually**, enter the date for which you wish to create a report. Tip: click the calendar icon and select a date in the calendar.
4. Select [**Generate**].
   ☑ A message that the report has been successfully sent is displayed.

14.4 Setting Communication Monitoring

In case the Sunny Home Manager does not communicate with Sunny Portal, you can set the time which should elapse before Sunny Portal reports an error and notifies you by e-mail.

The time which should elapse before the error is displayed by Sunny Portal and you are notified by e-mail is defined in the following settings:

- Alerts
- Data Request Interval (see Section 11.7, page 68)

Requirement:

☐ You must have the user role **Installer** or **PV System Administrator** (see Section 16.1, page 107).

Procedure:

1. Select **PV System Monitoring** in the page and menu selection.
2. In the area **Communication Monitoring**, select [**Settings**].
   ☑ The page **Configuration communication monitoring** opens.
3. Click the slider and, holding the left mouse button pressed, set how quickly Sunny Portal is to report an error and notify you by e-mail:

Alerts	Data request interval	Time
Off	Automatic	Communication monitoring is deactivated.
	Hourly	
	Daily	
Bounteous	Automatic	3:15 h
	Hourly	4:00 h
	Daily	27:00 h
Tolerant	Automatic	1:15 h
	Hourly	2:00 h
	Daily	25:00 h
Sharp	Automatic	00:30 h
	Hourly	1:15 h
	Daily	24:15 h

4. Enter the e-mail address(es) of the recipient(s) in the text field **Recipient**. If you enter several e-mail addresses, separate these by commas.
5. Select [**Save**].

14.5 Setting the Inverter Comparison

The inverter comparison enables Sunny Portal to recognize possible yield losses. If the specific yield of an inverter differs significantly from the mean yield of all the inverters, Sunny Portal can notify you by e-mail.

Requirements:

☐ The PV system must contain at least two inverters.

☐ You must have the user role **Installer** or **PV System Administrator** (see Section 16.1, page 107).

Procedure:

1. Select **PV System Monitoring** in the page and menu selection.
2. In the area **Inverter comparison**, select [**Settings**].
   ☑ The page **Configuration of inverter comparison** opens.
3. Enter the e-mail address of the recipient in the text field **Recipient**. If you enter several e-mail addresses, separate these by commas.

4. **PV array power**

   The PV array power is preset in the text field **Generator capacity [kWp]**. Sunny Portal calculates the PV array power based on the nominal power of each inverter. You can also enter the PV array power manually or have Sunny Portal calculate it by entering information on the strings (see Section 11.10, page 70).

5. In the text field **Tolerance**, enter the permissible tolerance for the inverter's specific yield. This simultaneously sets the deviation of the inverter specific yield from which e-mail notification by Sunny Portal will be triggered.
6. To select an inverter for the inverter comparison, activate the checkbox **Monitoring** in the line of the inverter.
7. Select [**Save**].

15 System Settings

15.1 Entering String Properties

A string describes a group of series-connected PV modules. Normally, a system is made up of multiple strings. Each string has specific properties, such as deviation to south (azimuth) or the roof tilt angle.

The yield forecast of the Sunny Home Manager plays an important role in load control. If you enter the string properties of your system, the Sunny Home Manager can output very precise yield forecasts.

Requirement:

☐ You must have the user role **Installer** or **PV System Administrator** (see Section 16.1, page 107).

Procedure:

1. Call up the inverter properties (see Section 11.2, page 66).
2. Select [**Edit**].
   ☑ The menu for setting the device properties opens.
3. To add a new string, select [**Add string**].
4. To copy an existing string, select in the string line and the **Copy** column.
5. In the column **Edit** of the copied string line, select .
   ☑ The menu for setting the string opens.
6. Enter the string properties:

Input field or drop-down list	Explanation
Designation	Name of the string, e.g. **String 1**
Manufacturer	PV module manufacturer
Module type	Depending on the selected manufacturer, different module types are displayed in the drop-down list.
Module power	These values are entered automatically once you have selected the module type. You can change the values using or the arrow keys on the keyboard.
Module surface	
Efficiency	
Number of modules	Number of modules forming the string
Azimuth	The azimuth angle indicates by how many degrees the module surfaces deviate from a southern orientation. • In the text field, enter the number of degrees by which the module surfaces deviate from a southern orientation. Enter a negative value (e.g. **−20**) for a deviation to the east and a positive value (e.g. **20**) for a deviation to the west. • If the module surfaces track the sun automatically, activate the checkbox **Tracking**.

Input field or drop-down list	Explanation
Tilt angle	The tilt angle indicates by how many degrees the module surfaces deviate from the horizontal. In some systems, the module surfaces are optimally aligned according to the latitude. In Germany, the optimum orientation is 30 degrees from the horizontal. • In the text field, enter the number of degrees by which the module surfaces deviate from the horizontal. • If the module surfaces are optimally aligned according to the latitude, activate the checkbox **Optimized**.
Description	• Enter any comments.

7. Select **[Accept]**.
8. Select [**Save**].

15.2 Changing System Data

Requirement:

☐ You must have the user role **Installer** or **PV System Administrator** (see Section 16.1, page 107).

Procedure:

1. Select **Configuration > PV system properties** in the page and menu selection.
2. Select the tab **PV System Data**.
3. Select [**Edit**].
   ☑ The menu for setting system data opens.
4. Change the desired PV system data.
5. Select [**Save**].

15.3 Changing the System Name

You can change the system name entered when you registered the Sunny Home Manager system.

Requirement:

☐ You must have the user role **Installer** or **PV System Administrator** (see Section 16.1, page 107).

System name requirement:

☐ The system name can have a maximum of 30 characters.

Procedure:

1. Select **Configuration > PV system properties** in the page and menu selection.
2. Select the tab **PV System Data**.
3. Select [**Edit**].
   ☑ The menu for setting system data opens.
4. Enter the desired system name in the text field **Name**.
5. Select [**Save**].

15.4 Setting the Nominal PV System Power

15.4.1 Manually Entering the Nominal PV System Power

The nominal PV system power is the sum of the power of all PV modules. You can obtain the nominal PV system power specifications from your installer.

The nominal PV system power is required in order to display the following data:

- Specific system yield
- Average expected yield
- Performance ratio

Nominal PV system power required for limiting active power feed-in

You must enter the nominal PV system power correctly to ensure limitation of the active power feed-in to the correct value (see Section 15.9, page 102). If there are changes to the installed PV system power, you will need to adjust this value.

Requirement:

☐ You must have the user role **Installer** or **PV System Administrator** (see Section 16.1, page 107).

Procedure:

1. Select **Configuration > PV system properties** in the page and menu selection.
2. Select the tab **PV System Data**.
3. Select [**Edit**].
   ☑ The menu for setting system data opens.
4. In the area **Power**, enter the system power in the text field **PV system power**.
5. To set the manufacturer of the PV modules, select the manufacturer in the drop-down list **Manufacturer**.
6. To set the module types, select the module types in the drop-down list **Module type**.
7. Select [**Save**].

15.4.2 Automatic Calculation of Nominal PV System Power

The nominal PV system power is the sum of the power of all PV modules. It can be calculated automatically from the data in the device properties.

The nominal PV system power is required in order to display the following data:

- Specific system yield
- Average expected yield
- Performance ratio

Requirement:

☐ You must have entered the PV array power of all inverters (see Section 11.10, page 70).

☐ You must have the user role **Installer** or **PV System Administrator** (see Section 16.1, page 107).

Procedure:

1. Select **Configuration > PV system properties** in the page and menu selection.
2. Select the tab **PV System Data**.
3. Select [**Edit**].
   ☑ The menu for setting system data opens.

4. In the area **Power**, activate the checkbox **Calculate PV system performance from device properties**.
   ☑ The calculated nominal PV system power is displayed.
5. Select [**Save**].

15.5 Changing the System Description

You can enter important features of the system in the description. The text is displayed on the page **PV system profile**.

The editor only supports text and does not support typography with HTML tags.

Requirement:

☐ You must have the user role **Installer** or **PV System Administrator** (see Section 16.1, page 107).

Procedure:

1. Select **Configuration > PV system properties** in the page and menu selection.
2. Select the tab **PV System Data**.
3. Select [**Edit**].
   ☑ The menu for setting system data opens.
4. Enter a description in the area **Description**.
5. Select [**Save**].

15.6 Changing Operator Data

The operator is a private individual or legal entity who owns PV systems for business purposes, for example. The operator can farm out use of the PV system without necessarily being the user himself.

The name of the operator is displayed on the page **PV system profile**.

Requirement:

☐ You must have the user role **Installer** or **PV System Administrator** (see Section 16.1, page 107).

Procedure:

1. Select **Configuration > PV system properties** in the page and menu selection.
2. Select the tab **Operator**.
3. Select [**Edit**].
   ☑ The menu for setting the operator data opens.
4. Enter the operator data.
5. Select [**Save**].

15.7 Changing/Deleting the System Image

The system image is the image in the page and menu selection next to the menu item "**My Sunny Home Manager system**".

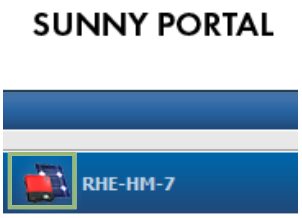

Figure 12: PV system image

You can replace the standard system image with a user-defined system image. The user-defined system image will also be displayed at the following locations:

- On the **PV system profile** page
- If pages have been released for Sunny Portal, the system image will be shown on the list of released systems on the www.SunnyPortal.com homepage.

You can save several images in a gallery in Sunny Portal. This makes it easy to change the system image and access your images from different computers.

Changing the System Image

Requirement:

☐ You must have the user role **Installer** or **PV System Administrator** (see Section 16.1, page 107).

System image requirements:

☐ Maximum image size: 500 kB

☐ Possible image formats: JPG, PNG, GIF

Procedure:

1. Select **Configuration > PV system properties** in the page and menu selection.
2. Select the tab **PV System Data**.
3. Select [**Edit**].
   ☑ The menu for setting system data opens.
4. In the area **PV system image**, select [**Load image**].
5. Select the desired image from one of your directories.
6. Select [**Open**].
7. To change the system image size, move the gray squares with the mouse.
8. To move the image section, click on the image section and move it while holding the left mouse button pressed.
9. Select [**Save**].
10. To save an image in the gallery, upload the image to the gallery as follows:
    - Select [**Select from the gallery**].
    - Select **Upload**.
    - Select [**Browse**].
    - Select the desired image from one of your directories.
    - Select [**Upload selected file**].
    - Select .
      ☑ The image is saved in the gallery.
11. To upload an image from the gallery as the system image, select [**Select from the gallery**].
12. Double-click the desired image.
13. Select [**Save**].

Deleting the User-Defined System Image

If you delete the user-defined system image, Sunny Portal will display the default system image.

Procedure:

1. Select **Configuration > PV system properties** in the page and menu selection.
2. Select the tab **PV System Data**.

3. Select [**Edit**].
   ☑ The menu for setting system data opens.
4. Select [**No PV system image**] in the area **PV system image**.
5. Select [**Save**].

15.8 Entering the Feed-in Tariff, Self-Consumption Tariff and Electricity Tariff

The values entered for the feed-in tariff, self-consumption tariff and electricity tariff affect the following components:

- Recommended actions in the diagram **Forecast and Recommended Action** on the page **Current Status and Forecast**
- Load control via the Sunny Home Manager (either directly via the local network or via radio-controlled sockets)

Requirement:

☐ You must have the user role **Installer** or **PV System Administrator** (see Section 16.1, page 107).

Procedure:

1. Select **Configuration > PV system properties** in the page and menu selection.
2. Select the tab **Parameters**.
3. Select [**Edit**].
   ☑ The menu for parameter settings opens.
4. Enter the feed-in tariff per kWh in the area **Reimbursement** in the text field **Feed-In Tariff**. Also select the desired currency in the accompanying drop-down list.
5. In the text field **PV system with self-consumption**, select whether self-generated PV energy is consumed in your household (self-consumption). If you select **Yes** (default setting), the self-consumption of the household is taken into consideration in the load control and recommended actions.
6. If you receive compensation for self-consumption, enter the self-consumption tariff in the text field **Self-Consumption Tariff**.
7. If you do not receive compensation for self-consumption, enter **0** in the text field **Self-Consumption Tariff**.
8. In the area **Electricity Tariff** , enter the time for which the electricity tariff applies in the input fields **From** and **To**.
   Tip: Split the night tariff into two tariffs. Configure the first tariff up to 12 midnight. Configure the second tariff from 12 midnight.
9. Enter the electricity tariff that applies to the entered time in the input field **Price**.
10. If the electricity tariff only applies to specific weekdays, activate the checkboxes with the respective weekdays.
11. If the electricity tariff applies to each weekday, activate all weekday checkboxes.
12. To enter additional electricity tariffs, select ⊞ and enter the data.
13. Select [**Save**].

15.9 Configuring Limitation of Active Power Feed-In

NOTICE

Responsibility of the system operator for limitation of active power feed-in

The system operator is responsible for the correctness of information on limiting the active power feed-in and nominal PV system power.

- Ask your grid operator beforehand whether you are permitted to use the Sunny Home Manager to limit active power feed-in (Manufacturer's Declaration "Feed-In Management in Accordance with the Renewable Energy Sources Act (EEG) 2012 with Sunny Home Manager (SHM) from SMA" available at www.SMA-Solar.com).
- Set the limitation of active power feed-in required by the grid operator. If you are not sure about this, contact your grid operator.
- Ensure you have correct information on the nominal PV system power. If you extend the system, adjust the value for the nominal PV system power accordingly.

Supported inverters for the limitation of the active power feed-in to 0%

Limitation of the active power feed-in to 0% is only supported by inverters that support the fallback function (fallback: in the event of a communication failure between the Sunny Home Manager and the inverter, the inverter reverts to an output power of 0 watts). For more information see the inverter manual at www.SMA-Solar.com.

Requirement:

☐ With all inverters, the parameter **Operating mode active power** must be set to the value **Active power limitation P via system control** (see Sunny Explorer user manual).

☐ You must have the user role **Installer** or **PV System Administrator** (see Section 16.1, page 107).

Procedure:

1. Select **Configuration > PV system properties** in the page and menu selection.
2. Select the tab **Parameters**.
3. Select [**Edit**].
   ☑ The menu for parameter settings opens.
4. In the area **Limiting of the active power feed-in**, select the applicable option:
   - If limitation of active power feed-in is not required for your system, select **no limiting of the active power feed-in** (default setting).
   - If limitation of active power feed-in is required for your system, carry out the following steps:
     - To test whether the limitation of active power feed-in is working in the system, select the option **max. xx kW** and enter the value **0**. Thus, the Sunny Home Manager immediately limits the active power when the inverters start feeding into the utility grid.
     - If the grid operator requires limitation to a maximum active power in kW, select the option **max. xx kW** and enter the maximum permitted active power in kW.
     - If the grid operator requires limitation to a percentage of the nominal PV system power, select the option **Max. xx % of the nominal PV system power** and enter the required percentage.
     - If the grid operator requires limitation of the active power feed-in to 0%, select the option **Max. xx% of nominal PV system power** and enter the value **0**.

5. Select [**Save**].
   ☑ The data is being transferred. This can take up to five minutes.
6. To display the active power limitation, select **Energy Balance > Current** or **Energy Balance > Day** in the page and menu selection.
   ☑ In the diagrams **Energy balance - Current** and **Energy balance - Day**, the specified limitation of active power feed-in is displayed as a red line. If the PV production exceeds the specified threshold, a blue area is shown above the red line as a maximum, and this corresponds to the current self-consumption.

15.10 Activating/Deactivating Grid Management Services

The Sunny Home Manager can receive the specifications for grid management services via Ethernet-based communication. The grid operator can set up this link. You also have to activate grid management services for the Sunny Home Manager.

Requirement:

☐ You must have the user role **Installer** or **PV System Administrator** (see Section 16.1, page 107).

Procedure:

1. Select **Configuration > PV system properties** in the page and menu selection.
2. Select the tab **Parameters**.
3. Select [**Edit**].
   ☑ The menu for parameter settings opens.
4. Select the appropriate option in the area **Grid management services via Ethernet based communication**:
   - If the Sunny Home Manager does not have to implement any grid operator specifications, select **No** (default setting).
   - If the Sunny Home Manager does have to implement grid operator specifications, select **Yes** and if necessary enter a different port in the field **Port**. Tip: The default setting Port 502 can normally remain set. You may have to change the port if there are several Modbus devices in the network.
5. Select [**Save**].

15.11 Setting the Optimization Target

The optimization target defines the objectives you wish to achieve with your Sunny Home Manager system:

- Highest possible self-consumption (environmental aspect - ecological)
- Highest possible cost savings (business aspect - economical)

The optimization target affects the following components:

- Load control via the Sunny Home Manager (either directly via the local network or via radio-controlled sockets)
- Recommended actions in the diagram **Forecast and Recommended Action** on the page **Current Status and Forecast**

Requirements:

☐ The feed-in tariff, self-consumption tariff and electricity tariff must be entered (see Section 15.8, page 101).

☐ You must have the user role **Installer** or **PV System Administrator** (see Section 16.1, page 107).

Procedure:

1. Select **Configuration > PV system properties** in the page and menu selection.
2. Select the tab **Parameters**.
3. Select [**Edit**].
   ☑ The menu for parameter settings opens.

4. In the area **Optimization Target**, click the slider and, holding the left mouse button pressed, set the optimization target:
   - To achieve the highest self-consumption possible, move the slider towards **ecological**.
   - To achieve the greatest possible cost savings, move the slider towards **economical**.
5. Select [**Save**].

15.12 Entering the Amount of CO2 Avoided

The CO_2 factor indicates how much CO_2 is produced during the power generation of one kilowatt hour. The CO_2 factor can vary depending on the grid operator. To find out the level of the CO_2 factor for one kilowatt hour of electric current, contact your grid operator.

Sunny Portal can use the CO_2 factor to calculate how much CO_2 was saved due to the power generation of your system.

You can view the value of CO_2 avoided on the following pages:

- **PV system profile** page
- **Daily info report** or **Monthly info report** (see Section 14.3.2, page 91).

Requirement:

☐ You must have the user role **Installer** or **PV System Administrator** (see Section 16.1, page 107).

Procedure:

1. Select **Configuration > PV system properties** in the page and menu selection.
2. Select the tab **Parameters**.
3. Select [**Edit**].
   ☑ The menu for parameter settings opens.
4. In the area **Factor**, enter the CO_2 factor in the text field or click the slider and, holding the left mouse button pressed, set the CO_2 factor.
5. Select [**Save**].

15.13 Automatic Calculation of the Predicted Annual Yield

Sunny Portal can display in a table how the predicted annual yield of your system is likely to be distributed throughout the months of the year.

The predicted annual yield of the system is calculated from the specific annual yield (kWh/kWp) at the system location multiplied by the nominal PV system power.

You can obtain the specific annual yield for your system location from irradiation maps. Local conditions such as the shading or orientation of the system are not taken into account by Sunny Portal.

Requirements:

☐ The nominal PV system power must be set (see Section 15.4, page 98).

☐ You must have the user role **Installer** or **PV System Administrator** (see Section 16.1, page 107).

Procedure:

1. Select **Configuration > PV system properties** in the page and menu selection.
2. Select the tab **Parameters**.
3. Select [**Edit**].
   ☑ The menu for parameter settings opens.

4. In the area **Yield Expectations** , enter the specific annual yield in the text field **Specific Annual Yield**.
   ☑ The predicted annual yield is displayed in the field **Predicted Annual Yield**.
5. To enable configuration of the average expected yield and the monthly distribution on the page **Annual Comparison**, activate the checkbox **The monthly distribution can be configured in the diagrams**.
6. Select [**Save**].

15.14 Setting the Monthly Distribution of the Predicted Annual Yield

The monthly distribution shows how the predicted annual yield is likely to be distributed throughout the months of the year.

You have the following options:

- Having Sunny Portal suggest the monthly distribution
- Manually entering the monthly distribution

Having Sunny Portal Suggest the Monthly Distribution

Requirements:

☐ The system location must be entered (see Section 15.2, page 97).

☐ You must have the user role **Installer** or **PV System Administrator** (see Section 16.1, page 107).

Procedure:

1. Select **Configuration > PV system properties** in the page and menu selection.
2. Select the tab **Parameters**.
3. Select [**Edit**].
   ☑ The menu for parameter settings opens.
4. In the area **Yield expectations**, select [**Suggest a Monthly Distribution**].
   ☑ The monthly distribution is displayed in the table with the months.
5. To display the average expected yield and the monthly distribution in the diagrams on the pages **Annual Comparison** and **Energy and Power**, activate the checkbox **Display the monthly distribution in the yearly comparison, as well as energy and power**.
6. To enable configuration of the average expected yield on the pages **Annual Comparison** and **Energy and Power**, activate the checkbox **The monthly distribution can be configured in the diagrams**.
7. Select [**Save**].

Manually Entering the Monthly Distribution

1. Select **Configuration > PV system properties** in the page and menu selection.
2. Select the tab **Parameters**.
3. Select [**Edit**].
   ☑ The menu for parameter settings opens.
4. In the area **Yield Expectations**, enter the values in the text fields **in %** in the table with the months.
5. To display the predicted annual yield and the monthly distribution in the diagrams on the pages **Annual Comparison** and **Energy and Power**, activate the checkbox **Display the monthly distribution in the yearly comparison, as well as energy and power**.
6. To enable configuration of the predicted annual yield on the pages **Annual Comparison** and **Energy and Power**, activate the checkbox **The monthly distribution can be configured in the diagrams**.
7. Select [**Save**].

15.15 Editing Data Releases

You can set whether to make your PV system data available to the PV database "www.sonnenertrag.eu" or the Internet portal Sunny Places.

"sonnenertrag.eu" is an online platform where you can publish the yields of your PV system and compare them with other registered PV systems.

Sunny Places is an Internet portal for private PV system owners where you can publicly present your PV system in addition to Sunny Portal, compare your PV system with other registered PV systems, and exchange experiences with other PV system owners. Sunny Places is free of charge.

Procedure:

1. Select **Configuration > PV system properties** in the page and menu selection.
2. Select the tab **Data releases**.
3. Select [**Edit**].
   ☑ The menu for setting data releases opens.
4. Activate or deactivate the data releases checkbox.
5. Select [**Save**].

16 User Management

16.1 User Groups and User Rights

If you have the user role **PV system administrator**, you can create further users in Sunny Portal so that they have access to your Sunny Portal system. You can assign various roles to users. The roles are differentiated by the rights they grant to users in your Sunny Portal system. The following roles are possible:

- Guest
- Standard user
- Installer
- System administrator

Rights	Role			
	Guest	Standard user	Installer	PV system administrator
Log in	✓	✓	✓	✓
View pages	✓	✓	✓	✓
Change and delete pages	–	–	✓	✓
Release pages for viewing in Sunny Portal and publish pages	–	–	✓	✓
View live data	–	✓	✓	✓
Save diagram data	–	✓	✓	✓
View and change user information	✓	✓	✓	✓
Changing the Sunny Portal Password	–	✓	✓	✓
Changing the System Password	–	–	✓	✓
View device properties	–	✓	✓	✓
Change device properties	–	–	✓	✓
View system properties	–	✓	✓	✓
Change system properties	–	–	✓	✓
View report configuration	–	✓	✓	✓
Change report configuration	–	–	✓	✓
Configure radio-controlled sockets	–	✓	✓	✓
Set the operating mode of radio-controlled sockets via Sunny Portal	–	✓	✓	✓
Replace Sunny Home Manager	–	–	–	✓

Rights	Role			
	Guest	Standard user	Installer	PV system administrator
Delete Sunny Home Manager	–	–	✓	✓
Reassign the Sunny Home Manager to the system	–	–	✓	✓
Delete the Sunny Home Manager system	–	–	✓	✓
Add devices	–	–	✓	✓
Replace devices	–	–	✓	✓
Delete devices	–	–	✓	✓
Set communication monitoring	–	–	✓	✓
Set inverter comparison	–	–	✓	✓
View the PV system logbook	–	✓	✓	✓
Confirm entries in the PV system logbook	–	–	✓	✓
Import data	–	–	✓	✓
Read off the software package version	–	✓	✓	✓
View user management	–	–	–	✓
Create and delete users and assign roles	–	–	–	✓

16.2 Creating a New User

Requirement:

☐ You must be a system administrator (see Section 16.1, page 107).

Procedure:

1. Select **Configuration > User management** in the page and menu selection.
2. Select [**New User**].
3. Enter the e-mail address of the new user in the text field **E-mail address**.
4. Activate the desired role option in the area **Roles**.
5. Select [**Save**].

☑ The new user receives an e-mail with the access data.

16.3 Deleting a User

Requirement:

☐ You must be a system administrator (see Section 16.1, page 107).

Procedure:

1. Select **Configuration > User management** in the page and menu selection.
2. In the user line and the column **Delete**, select .
3. Confirm the security prompt with [**Yes**].

16.4 Changing User Rights

Requirement:

☐ You must be a system administrator (see Section 16.1, page 107).

Procedure:

1. Select **Configuration > User management** in the page and menu selection.
2. In the user line and the column **Edit**, select .
   ☑ The areas **E-mail Address** and **Roles** open.
3. Activate the desired role option in the area **Roles**.
4. Select [**Save**].

☑ The user rights are changed for the Sunny Home Manager system.

16.5 Changing User Information

Every user can enter user information. User information includes, for example, the user's name and address.

Procedure:

1. Select **User Info/Logout > User information** in the page and menu selection.
2. Select [**Edit**].
   ☑ The menu for setting user information opens.
3. Enter the user information.
4. Select [**Save**].

17 Password Information

17.1 Requirements for a Secure System Password

You increase the security of your password with the following measures:

- Select passwords containing at least eight characters.
- Use combinations of upper-case and lower-case letters, special characters and numbers.
- Do not use names or common words (e.g. "dog", "cat", "house").
- For the password, avoid using words that have any personal relevance to you such as the names of persons or pets, personnel numbers, identification numbers or car license plates.
- Do not repeat names or words (e.g. "househouse" or "catcat").
- Do not use combinations of numbers or letters in the same order as they appear on your keyboard (e.g. "12345", "qwert").

17.2 Required Passwords

Sunny Portal Password

You can log into Sunny Portal with the Sunny Portal password.

If you register a PV system in Sunny Portal, you must specify a Sunny Portal password during registration.

If you have registered as a new user in Sunny Portal (see Section 16.2, page 108), you will receive an e-mail with a Sunny Portal password.

You can change the Sunny Portal password (see Section 17.3, page 110).

System Password

All devices connected via Speedwire with the same password form a system. For this reason, a password used for all devices in a system is called a system password.

You can only access the devices in your PV system via your communication product (e.g. Sunny Explorer, Sunny Home Manager) if all devices have the same password.

You must define the system password in Sunny Portal when you register the Sunny Home Manager system. The system password that you defined upon registration of the Sunny Home Manager is the password of the user group **Installer**. You can change the system password (see Section 17.3, page 110).

Password for Edimax smart plug switches SP-2101W

All Edimax smart plug switches in the system must have the same password. If there are different passwords for the smart plug switches, the Sunny Home Manager cannot control all smart plug switches.

Make sure that the shared password is entered at the following positions:

- In the separate Edimax app for each smart plug switch registered there.
- In the Sunny Home Manager properties (see Section 11.2 "Calling Up the Properties of a Device", page 66)

17.3 Changing Passwords

Changing the Sunny Portal Password

Requirement:

☐ You must be a **Standard user**, **Installer** or **PV system administrator** (see Section 16.1, page 107).

Sunny Portal password requirements:

☐ The Sunny Portal password should consist of at least eight characters.

The following special characters are permitted:

- ! $ % & / ( ) = ? + – . ; : _ < > #
- Space

Procedure:

1. Select **User Info/Logout > Personal data** in the page and menu selection.
2. On the tab **Personal data**, select the hyperlink **If you want to change your password, please click here**.
3. Enter the old and the new Sunny Portal passwords in the designated text fields.
4. Select [**Save**].

Changing the System Password

Requirements:

☐ You must have the user role **Installer** or **PV System Administrator** (see Section 16.1, page 107).

System password requirements:

☐ The system password can be a maximum of twelve characters.

The following special characters are permitted:

- ? _ ! -

Procedure:

1. Call up the device properties of the Sunny Home Manager (see Section 11.2, page 66).
2. Select [**Edit**].
   ☑ The menu for setting the device properties opens.
3. Enter a new password in the **PV system password** field.
4. Enter the new password again in the field **Repeat password**.
5. Select [**Save**].

☑ The Sunny Home Manager changes the password for all devices.

17.4 Procedure in Case of Forgotten Passwords

Forgotten Sunny Portal Password

1. **Go to www.SunnyPortal.com**.
2. In the **Login** area, select the **Forgotten password** link.
3. Enter your e-mail address in the **E-mail** field.
4. Select [**Generate New Password**].
   ☑ You will receive an e-mail with a new password.
5. Change the assigned password (see Section 17.3, page 110).

Forgotten System Password

- Activate each device with a personal unlocking key (PUK) (see the Sunny Explorer help).

Forgotten password for Edimax WLAN radio-controlled sockets SP-2101W

See manufacturer's manual.

18 Troubleshooting

18.1 States of All LEDs

LED	Cause and corrective measures
Status LED	**Glowing green:** Sunny Home Manager 2.0 is switched on. **Flashing green:** Firmware is being updated. **Glowing red:** Sunny Home Manager 2.0 is starting up. **Flashing red:** An error has occurred.
COM LED	**Off:** No Ethernet connection established. **Glowing green:** Ethernet connection established. **Flashing green:** The Sunny Home Manager 2.0 is sending or receiving data.
Performance LED	**Off:** No system registered in Sunny Portal. **Flashing green:** Energy management in the Sunny Home Manager 2.0 running smoothly. **Flashing green:** An error has occurred. The error has already been reported to Sunny Portal. **Glowing red:** An error has occurred. The error has not yet been reported to Sunny Portal. **Flashing red:** No connection to Sunny Portal established.

18.2 Errors during Registration in Sunny Portal

Problem	Cause and corrective measures
The PV System Setup Assistant cannot establish a connection to the Sunny Home Manager.	It is possible that the Sunny Home Manager is not correctly connected to the router. **or** It is possible that the Sunny Home Manager is not supplied with voltage. In this case, all LEDs on the Sunny Home Manager will be off. **Corrective measures:** • Ensure that the Sunny Home Manager is correctly connected to the router (see Section 6.3 "Connecting the Sunny Home Manager to the Router", page 31). • Ensure that the Sunny Home Manager is supplied with voltage. • If the Sunny Home Manager is correctly connected to the router and is supplied with voltage but all LEDs remain off, contact the Service (see Section 21 "Contact", page 126).
The PV System Setup Assistant lists none or not all of the new SMA devices that are connected via Speedwire/Ethernet.	It is possible that the SMA device is not correctly connected to the router or is not supplied with voltage. **Corrective measures:** • Ensure that the SMA device is correctly connected to the router and is supplied with voltage (see SMA device documentation).

Problem	Cause and corrective measures
The PV System Setup Assistant lists none or not all of the new SMA devices that are connected via Speedwire/Ethernet.	The SMA device is already registered in Sunny Portal via Webconnect. **Corrective measures:** • Delete the SMA device from the Webconnect system or deactivate the data reception of the device in the Webconnect system.
The PV System Setup Assistant lists none or not all of the new SMA devices that are connected via Speedwire/Ethernet.	For Speedwire devices with integrated BLUETOOTH interface: It is possible that the communication via BLUETOOTH is not deactivated. **Corrective measures:** • Set NetID **0** on the Speedwire device with BLUETOOTH interface. This deactivates communication via BLUETOOTH.
The PV System Setup Assistant lists none or not all of the new SMA devices that are connected via Speedwire/Ethernet.	The SMA device is not located in the same local network as the Sunny Home Manager. **Corrective measures:** • Connect the SMA device to the same router/network switch as the Sunny Home Manager.
The PV System Setup Assistant lists none or not all of the new SMA devices that are connected via Speedwire/Ethernet.	The network cable that connects the SMA device to the router/network switch is not suitable for 100 MBit/s. **Corrective measures:** • Use a network cable suitable for Speedwire (for network cable requirements, see the Speedwire device documentation).
The PV System Setup Assistant lists none or not all of the new SMA devices that are connected via Speedwire.	DHCP is not activated in your router. **Corrective measures:** • Activate DHCP in the router. • If your router does not support DHCP, configure the static network settings on the Speedwire device using SMA Connection Assist. You can obtain the SMA Connection Assist software free of charge from the download area at www.SMA-Solar.com.
The PV System Setup Assistant lists none or not all of the new SMA devices that are connected via Speedwire.	The router/network switch used in the network deactivates the LAN ports when they appear to be inactive in order to save energy. As a result, it is not possible to establish any connection to the SMA device. **Corrective measures:** • Configure the router/network switch so that the LAN ports are not deactivated.
The PV System Setup Assistant lists none or not all of the new SMA devices that are connected via Speedwire.	The network switch used in the network uses IGMP snooping. This means that the connection to the SMA device is interrupted due to apparent inactivity, and cannot be subsequently restored. **Corrective measures:** • Deactivate the IGMP snooping function in the network switch.

Problem	Cause and corrective measures
The PV System Setup Assistant lists none or not all of the new SMA devices that are connected via Speedwire.	The firewall may not have been set up correctly. **Corrective measures:** • Enable ports 9523 and 3478 in the firewall (see firewall documentation).
The PV System Setup Assistant lists none or not all of the new SMA devices that are connected via Speedwire.	The firewall or IP filter may not have been configured correctly. **Corrective measures:** • Adjust the firewall or IP filter settings (see firewall- or router documentation).
The PV System Setup Assistant cannot find a Sunny Home Manager with the serial number and registration ID entered.	The serial number and/or the registration ID may have been entered incorrectly. **Corrective measures:** • Ensure that the entries are correct.
The PV System Setup Assistant cannot find a Sunny Home Manager with the serial number and registration ID entered.	It is possible that the registration procedure was previously initiated but not completed. **Corrective measures:** • Perform a complete reset of the Sunny Home Manager (see Section 18.5, page 116).
The PV System Setup Assistant cannot find a Sunny Home Manager with the serial number and registration ID entered.	It is possible that the Sunny Home Manager is not correctly connected to the router. **Corrective measures:** • Ensure that the Sunny Home Manager is correctly connected to the router (see Section 6.3 "Connecting the Sunny Home Manager to the Router", page 31).
The PV System Setup Assistant cannot find a Sunny Home Manager with the serial number and registration ID entered.	DHCP is possibly not activated on your router or there is a proxy server in your network. For this reason, Sunny Home Manager cannot establish a connection to Sunny Portal. **Corrective measures:** • Establish the connection to Sunny Portal using the Sunny Home Manager Assistant (see Section 18.3 "Using the Sunny Home Manager Assistant", page 115).
The PV System Setup Assistant cannot find a Sunny Home Manager with the serial number and registration ID entered.	The Sunny Home Manager has already been assigned to a system in Sunny Portal with your e-mail address. **Corrective measures:** • Delete the Sunny Home Manager from the PV system (see Section 13 "System Management", page 84). **or** • Register the Sunny Home Manager with the PV System Setup Assistant again (see Section 13.4 "Reassigning the Sunny Home Manager to the Sunny Portal System after the Reset", page 86).

Problem	Cause and corrective measures
The PV System Setup Assistant cannot find a Sunny Home Manager with the serial number and registration ID entered.	The Sunny Home Manager is assigned to a different system in Sunny Portal, for instance, if you have bought the Sunny Home Manager second-hand. **Corrective measures:** • If possible, contact the previous owners and ask them to delete the Sunny Home Manager system in Sunny Portal. **or** • Contact the Service (see Section 21 "Contact", page 126).
After you have entered the system password, some devices are shown with a warning symbol in the PV System Setup Assistant.	There is a different installer password configured in the devices with warning symbols. **Corrective measures:** 1. Select [**Skip forward**] in the PV System Setup Assistant and finish registration without selecting the devices. 2. Set a uniform installer password for all devices using the Sunny Explorer software or the inverter user interface (see Sunny Explorer help or inverter manual). 3. If you do not know the password set on each device, apply for a Personal Unlocking Key (PUK) for each device from the Service (see Section 21 "Contact", page 126). 4. Use Sunny Explorer to enable each device with the corresponding PUK. Then set a uniform installer password in all devices (see Sunny Explorer Help). 5. Log in to Sunny Portal and add the devices to the Sunny Home Manager system as new devices using the configuration wizard (see the user manual "Sunny Home Manager in Sunny Portal").
While the PV System Setup Assistant is performing the device search, the status LED of the Sunny Home Manager first flashes red for one to two minutes. Subsequently, the status LED glows green again.	Device detection takes a few minutes longer. **Corrective measures:** • No measures are required.
The automatic firmware update is not working and there is no corresponding error message.	The Sunny Home Manager may not be able to establish a connection to the SMA Update Portal because there is a proxy server in your network. **Corrective measures:** • Configure the settings of your network in such a way that the SMA Update Portal https://Update.SunnyPortal.de can be reached.

18.3 Using the Sunny Home Manager Assistant

The Sunny Home Manager Assistant will help you configure the Sunny Home Manager for your network if it does not automatically connect to Sunny Portal.

In addition, you can use the Sunny Home Manager Assistant to display the latest connection status to Sunny Portal, the network settings and the connected BLUETOOTH devices, and save these as a log file. If servicing should be necessary, the Service can use this log file to analyze the problem.

Procedure:

1. Use a network cable to connect the computer to the router to which the Sunny Home Manager is connected.
2. In the download area at www.SMA-Solar.com, download the Sunny Home Manager Assistant for the operating system of your computer.
3. Start the Sunny Home Manager Assistant by double-clicking on the file name.
4. Follow the instructions given in the Sunny Home Manager Assistant.

18.4 Error in the Sunny Home Manager Assistant

Problem	Cause and corrective measure
The Sunny Home Manager Assistant does not detect a Sunny Home Manager.	The computer with the Sunny Home Manager Assistant is not connected to the router to which the Sunny Home Manager is connected. **Corrective measures:** • Connect the computer with the Sunny Home Manager Assistant to the router to which the Sunny Home Manager is connected.

18.5 Resetting the Sunny Home Manager

Loss of data due to replacement or due to resetting to default settings

If the Sunny Home Manager is reset to the default settings or replaced, all data saved in the Sunny Home Manager will be deleted. The data saved in Sunny Portal can be transmitted to the Sunny Home Manager after calling up the PV system again in Sunny Portal. Devices that were connected to the Sunny Home Manager via EEBus must be reconnected (see technical information "SMA SMART HOME - Home appliance energy management using EEBus").

Default settings

- To reset the Sunny Home Manager to the default settings, press down and hold the reset button using a sharp object for two to six seconds.
  ☑ LEDs flash first green and then red.

Restart

- To restart the Sunny Home Manager, press down and hold the reset button using a sharp object for longer than six seconds.
  ☑ LEDs go out. The status LED then glows red constantly during system startup.

Pressing down and holding the reset button for less than two seconds has no effect.

18.6 Incomplete/Outdated/Faulty Data on the User Interface

Problem	Cause and corrective measures
The page **Energy Balance** is not displayed.	The **Energy balance** page is only displayed if the integrated measuring device or a separate SMA Energy Meter supplies measurement data from the grid-connection point. **Corrective measures:** • Ensure that a measuring device is installed at the grid-connection point. Assign the measuring device (integrated or separate SMA Energy Meter) to the grid-connection point in the Sunny Home Manager properties.

Problem	Cause and corrective measures
On the pages **Energy balance** and **Load balance and control**, the **Current** tab is not displayed.	The tab is only displayed if the data request interval is set to **Automatic**. **Corrective measures:** • Set the data request interval to **Automatic** (see Section 11.7, page 68).
The diagrams are empty or incomplete.	No energy meters or not all energy meters are connected to the Sunny Home Manager or they are not configured. **Corrective measures:** • Connect the energy meters to the Sunny Home Manager and configure them (see the installation manual of the Sunny Home Manager).
The diagrams are empty or incomplete.	Sunny Portal cannot receive any data from the Sunny Home Manager. **Corrective measures:** • Make sure that the connection between the Sunny Home Manager and the Sunny Portal is established (see the installation manual of the Sunny Home Manager).
Data on the following pages is not up to date: • **Current Status And Forecast** • **Energy balance** on the **Current** tab • **Load balance and control** on the **Current** tab	Settings in the router prevent Sunny Portal from requesting current data from the Sunny Home Manager. **Corrective measures:** • Ensure that the following requirements are fulfilled – All UDP ports > 1024 on the router or modem must be open for outgoing connections. If there is a firewall installed on the router or modem, you might have to adjust the firewall rules. – It must be possible for the outgoing router or modem connections to reach all Internet destinations (target IP, target port). If there is a firewall installed on the router or modem, you might have to adjust the firewall rules. – On the router or modem with NAT (Network Address Translation) there must not be any port forwarding. Potential communication problems can thus be prevented. – There must be no packet filtering or manipulation for SIP packets on the router or modem.
An exclamation mark is permanently displayed after parameters have been changed.	Sunny Portal could not transfer the parameters to the Sunny Home Manager. **Corrective measures:** • Make sure that the connection between the Sunny Home Manager and the Sunny Portal is established (see the installation manual of the Sunny Home Manager).

Problem	Cause and corrective measures
Sunny Portal is displaying unrealistic data.	The integrated measuring device of the Sunny Home Manager or the separate SMA Energy Meter is not correctly connected or configured. **Corrective measures:** • Ensure that all devices are correctly connected and configured.
Sunny Portal is not showing any weather forecast in the diagram **Forecast and recommended action**.	It can take up to 24 hours after the Sunny Home Manager has been initially registered in Sunny Portal until the weather forecast is displayed. **Corrective measures:** • After 24 hours, check again to see whether the weather forecast is displayed. • If after 24 hours there is still no weather forecast displayed, contact the Service team (see Section 21, page 126).
The animated graphic on the page **Current status and Forecast** is not displaying any current data.	The reception of current data from the Sunny Home Manager is only possible if the data request interval is set to **Automatic**. **Corrective measures:** • Set the data request interval to **Automatic** (see Section 11.7, page 68).
The animated graphic on the page **Current status and Forecast** is not displaying any current data.	It is possible that no PV production meter is connected to the Sunny Home Manager and that too many data capture devices (e.g. several computers with Sunny Explorer) are simultaneously accessing the devices of your PV system. **Corrective measures:** • Ensure that, apart from the Sunny Home Manager, a maximum of two other data capture devices are accessing your system at any one time.
No data is displayed on the **Current** tab on the page **Load Balance and Control**.	Too many data capture devices (e.g. several computers with Sunny Explorer) may be simultaneously accessing the devices of your system. **Corrective measures:** • Ensure that, apart from the Sunny Home Manager, a maximum of two other data capture devices are accessing your system at any one time.

Problem	Cause and corrective measures
No data is displayed on the **Current** tab on the page **Energy Balance**.	It is possible that no PV production meter is connected to the Sunny Home Manager and that too many data capture devices (e.g. several computers with Sunny Explorer) are simultaneously accessing the devices of your PV system. **Corrective measures:** • Ensure that, apart from the Sunny Home Manager, a maximum of two other data capture devices are accessing your system at any one time.
After a device has been replaced using the configuration wizard, the current parameters are not displayed in the parameter list.	It is possible that the new parameters have not yet been transferred to Sunny Portal. **Corrective measures:** • Call up the parameter list again later.

18.7 Configuration of the Radio-Controlled Socket

Problem	Cause and corrective measures
When configuring the radio-controlled sockets, the time period cannot be set as desired.	The time period must be at least as long as • the maximum program runtime **or** the sum of the minimum switch-on time and the minimum switch-off time and the sum of the device operating time and the minimum switch-off time set for the time period. **Corrective measures:** • When setting the time period, take into consideration the maximum program runtime or the minimum switch-on and switch-off time and the set device operating time.
You can not configure the radio-controlled sockets in Sunny Portal or set the operating mode of the radio-controlled sockets using Sunny Portal.	You do not have **Standard user**, **Installer** or **PV system administrator** user rights. **Corrective measures:** • Ask the system administrator to assign you **Standard user**, **Installer** or **PV system administrator** user rights (see Section 16.4, page 109).
The Sunny Home Manager can only control the Edimax smart plug switch to a limited extent.	The password of the Edimax smart plug switch is unknown to the Sunny Home Manager. **Corrective measures:** • Enter the password of the Edimax smart plug switch in the Sunny Home Manager properties.
The Edimax smart plug switch registered in the local network is not found by the Sunny Home Manager.	This is a smart plug switch by Edimax, which is not supported by the Sunny Home Manager. **Corrective measures:** • Check whether the smart plug switch by Edimax is supported by the Sunny Home Manager (see Section 2.3, page 11).

18.8 Messages concerning Active Power Limitation in the System Logbook

Problem	Cause and corrective measures
Message in the system logbook: **Supplied power has exceeded the permitted value several times.**	Although the function **Limitation of active power feed-in** is activated, more than the maximum permitted active power has been fed into the utility grid. **Corrective measures:** • Ensure that the feed-in meter is configured correctly (see Section 11.6, page 67). • Ensure that the parameter **Operating mode active power** is set to the value **Active power limitation P via system control** for all inverters.
Message in the system logbook: **Act. power limitation deactivated due to incorr. configuration.**	The function **Limiting of the active power feed-in** was deactivated by Sunny Home Manager because the system configuration in Sunny Portal was faulty. **Corrective measures:** • This message can appear while making changes to the Sunny Home Manager system, e.g. upon device replacement. In this case, no action is needed. • If the message appears over an extended time period, contact the Service (see Section 21, page 126).
Message in the system logbook: **Disturbance**: **act. power limitation activated w/o regard to own consumption**	The function **Limiting of the active power feed-in** is faulty because there is no data from the feed-in meter. Risk of yield loss because the self-consumption of the household cannot be taken into account. **Corrective measures:** • Ensure that the feed-in meter is working and correctly connected.
Message in the system logbook: **Inverter does not respond to active power** limitation	At least one inverter is not responding to limit the active power feed-in. In this case, the Sunny Home Manager initiates stronger active power limitation in the remaining inverters. Consequently, the maximum permitted active power feed-in is complied with. If the message **Fed-in power has repeatedly exceeded the permitted value** appears on the same day, an error is present. **Corrective measures:** • Ensure that the parameter **Operating mode active power** is set to the value **Active power limitation P via system control** for all inverters.

18.9 Devices with Communication via Data Exchange Protocol

Problem	Cause and corrective measures
Message in the system logbook: **EM gateway not found: SEMP, name:**	The gateway is not connected to the local network. **Corrective measures:** • Check whether all network cable plugs are inserted and locked.

Problem	Cause and corrective measures
Message in the system logbook: **EM gateway not found: SEMP, name:**	The voltage supply of the gateway is faulty. **Corrective measures:** • Check whether the power plug of the gateway is plugged into the outlet.
Message in the system logbook: **EM gateway not found: SEMP, name:**	The gateway could not be found by the Sunny Home Manager. **Corrective measures:** • Restart the gateway (see manual of the gateway).
Message in the system logbook: **EM gateway not found: SEMP, name:**	The Sunny Home Manager and the gateway are located in different local networks. **Corrective measures:** • Connect the gateway and the Sunny Home Manager to the same network switch/router.
Message in the system logbook: **EM gateway not found: SEMP, name:**	The Sunny Home Manager and the gateway are configured for different IP subnets. **Corrective measures:** • If your router supports DHCP, configure the Sunny Home Manager (default setting) and the gateway to DHCP (see manual of the gateway). • If your router does not support DHCP, manually assign IP addresses in the same subnet for the Sunny Home Manager and the gateway (see manual of the respective device).
Message in the system logbook: **EM gateway not found: SEMP, name:**	The voltage supply of the device is faulty. **Corrective measures:** • Check whether the power plug of the device is plugged into the outlet.
Message in the system logbook: **EM gateway not found: SEMP, name:**	The device is not connected to its gateway. **Corrective measures:** • Check whether the communication between the device and the gateway is working. The device might be outside the range of its gateway (e.g. with power-line communication).
Message in the system logbook: **EM gateway not found: SEMP, name:**	The device could not be found by the Sunny Home Manager. **Corrective measures:** • Restart the device (see manual of the device).
Message in the system logbook: **EM gateway not found: SEMP, name:**	One or more devices are not correctly configured in the gateway or for the smart grid. **Corrective measures:** • Configure the device for its gateway (see manual of the gateway). • Configure the device for the smart grid (see manual of the respective device).
Message in the system logbook: **Communication with the EM gateway disturbed: SEMP, name:**	The gateway is not connected to the local network. **Corrective measures:** • Check whether all network cable plugs are inserted and locked.

Problem	Cause and corrective measures
Message in the system logbook: **Communication with the EM gateway disturbed: SEMP, name:**	The gateway is not communicating correctly with the Sunny Home Manager. **Corrective measures:** • Restart the gateway (see manual of the gateway).
Message in the system logbook: **Communication with the EM gateway disturbed: SEMP, name:**	The device is not communicating correctly with its gateway. **Corrective measures:** • Check whether the communication between the device and the gateway is working. The device might be outside the range of its gateway (e.g. with power-line communication). • Restart the gateway (see manual of the gateway). • Restart the device (see manual of the device).
Message in the system logbook: **EM gateway has incompatible firmware: SEMP, name:**	The supported firmware version is not installed on the gateway. **Corrective measures:** • Update the gateway to the supported firmware version (see manual of the gateway).
Message in the system logbook: **EM communication: An internal error has occurred (error number:** XXXX*)	A software error has occurred on the Sunny Home Manager. **Corrective measures:** • Reset the Sunny Home Manager (see Section 18.5, page 116)

* "XXXX" is a placeholder for the respective four-digit error number.

19 Decommissioning

19.1 Decommissioning the Sunny Home Manager

Procedure:

- Disconnecting the Sunny Home Manager from the voltage supply
- Removing the cables and dismounting the Sunny Home Manager

Disconnecting the Sunny Home Manager from the voltage supply

⚠ DANGER

Danger to life due to electric shock

Lethal voltages are present at the connection point of the utility grid.

- Disconnect the connection point from the utility grid via the disconnection device (e.g. in the distribution board).

Removing the cables and dismounting the Sunny Home Manager

1. Unplug the network cable from the network terminal of the Sunny Home Manager.
2. Unplug the other end of the network cable from the router.
3. Remove the Sunny Home Manager from the top-hat rail:
   - Press the top-hat rail locking mechanism located underneath the Sunny Home Manager downwards using a screwdriver. Tilt the lower edge of the Sunny Home Manager forwards and remove upwards from the top-hat rail.

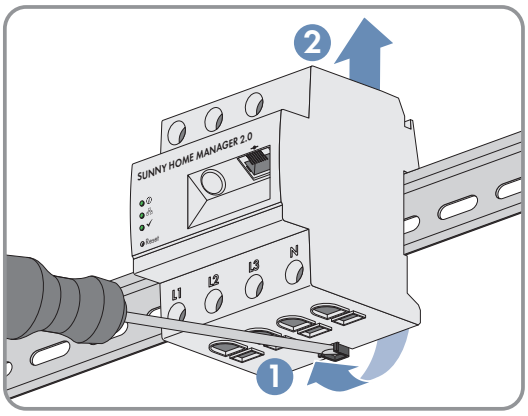

19.2 Packing the Product for Shipment

- Pack the product for shipping. Use the original packaging or packaging that is suitable for the weight and size of the product.

19.3 Disposing of the Product

- Dispose of the product in accordance with the locally applicable disposal regulations for electronic waste.

20 Technical Data

Energy Manager

Connection to the local router	via Ethernet cable (10/100 Mbit/s, RJ45 plug)
Connection of SMA PV inverters and battery systems	Ethernet or WLAN via local router
Connection of loads in the energy management (for examples of applications for appliance connection and controls, see technical information on the Sunny Home Manager 2.0 product page at www.SMA-Solar.com)	1. Direct data connection (EEBus, SEMP) • e.g. intelligent heat pumps, electric car charging stations, heating elements, home appliances, etc. 2. WLAN EDIMAX SP-2101W radio-controlled socket (available via the online shop) • on/off controls for home appliances of up to 12 A of power

Integrated measuring device

Measurement accuracy, measuring cycle	1%, 1000 ms
Standard application	Measurement of purchased electricity and grid feed-in at the grid connection point
Alternative application	1. Measurement of PV generation power 2. Measurement inactive (L1, N, network)

Max. number of devices on the system (excluding the SMA Energy Meter)

Total number of devices in the system	up to 24
• of which devices as loads in active energy management	up to 12

Inputs (voltage and current)

Nominal voltage	230 V / 400 V
Frequency	50 Hz/±5%
Nominal current/limiting current per line conductor	5 A/63 A (>63 A can be covered via external current transformers)
Connection cross-section	10 mm² to 16 mm² (for 63 A application)
Torque for screw terminals	2.0 Nm

Ambient Conditions in Operation

Ambient temperature	-25°C to +40°C
Storage temperature range	-25°C to +70°C
Protection class (as per IEC 62103)	II
Degree of protection (in accordance with IEC 60529)	IP2X

Max. permissible value for relative humidity (non-condensing)	5% to 90%
Altitude above MSL	0 m to 2000 m

General Data

Width x height x depth	70 mm x 88 mm x 65 mm
Individual units DIN rail	4
Weight	0.3 kg
Mounting location	Switch or meter cabinet
Mounting type	Top-hat rail mounting
Status display	3 x LED
Self-consumption	< 3 W

Equipment

Operation and visualization	via Sunny Portal, Sunny Places, Sunny Portal Pro
Update function	Automatic for the Sunny Home Manager and the connected SMA devices
Warranty	2 years
Certificates and approvals	www.SMA-Solar.com

Accessories

SMA Energy Meter as complement to integrated measuring device	Precise three-phase measuring, connection via Ethernet in the local network.
Model number	HM-20

21 Contact

If you have technical problems with our products, please contact the SMA Service Line. We require the following information in order to provide you with the necessary assistance:

- Serial number and software package of the Sunny Home Manager
- Manufacturer, serial number and firmware version of the radio-controlled socket
- Name of the Sunny Home Manager system
- Type of energy meters

Danmark Deutschland Österreich Schweiz	SMA Solar Technology AG Niestetal Sunny Boy, Sunny Mini Central, Sunny Tripower: +49 561 9522-1499 Monitoring Systems (Kommunikationsprodukte): +49 561 9522-2499 Fuel Save Controller (PV-Diesel-Hybridsysteme): +49 561 9522-3199 Sunny Island, Sunny Boy Storage, Sunny Backup, Hydro Boy: +49 561 9522-399 Sunny Central, Sunny Central Storage: +49 561 9522-299 SMA Online Service Center: www.SMA-Service.com	Belgien Belgique België Luxemburg Luxembourg Nederland	SMA Benelux BVBA/SPRL Mechelen +32 15 286 730 SMA Online Service Center: www.SMA-Service.com
		Česko Magyarország Slovensko	SMA Service Partner TERMS a.s. +420 387 6 85 111 SMA Online Service Center: www.SMA-Service.com
		Türkiye	SMA Service Partner DEKOM Ltd. Şti. +90 24 22430605 SMA Online Service Center: www.SMA-Service.com
France	SMA France S.A.S. Lyon +33 472 22 97 00 SMA Online Service Center : www.SMA-Service.com	Ελλάδα Κύπρος	SMA Service Partner AKTOR FM. Αθήνα +30 210 8184550 SMA Online Service Center: www.SMA-Service.com
España Portugal	SMA Ibérica Tecnología Solar, S.L.U. Barcelona +34 935 63 50 99 SMA Online Service Center: www.SMA-Service.com	United Kingdom	SMA Solar UK Ltd. Milton Keynes +44 1908 304899 SMA Online Service Center: www.SMA-Service.com
Italia	SMA Italia S.r.l. Milano +39 02 8934-7299 SMA Online Service Center: www.SMA-Service.com	Bulgaria România Slovenija Hrvatska	SMA Service Partner Renovatio Solar +40 372 756 599 SMA Online Service Center: www.SMA-Service.com

United Arab Emirates	SMA Middle East LLC Abu Dhabi +971 2234 6177 SMA Online Service Center: www.SMA-Service.com	India	SMA Solar India Pvt. Ltd. Mumbai +91 22 61713888
ไทย	SMA Solar (Thailand) Co., Ltd. กรุงเทพฯ +66 2 670 6999	대한민국	SMA Technology Korea Co., Ltd. 서울 +82-2-520-2666
South Africa	SMA Solar Technology South Africa Pty Ltd. Cape Town 08600SUNNY (08600 78669) International: +27 (0)21 826 0600 SMA Online Service Center: www.SMA-Service.com	Argentina Brasil Chile Perú	SMA South America SPA Santiago de Chile +562 2820 2101
Australia	SMA Australia Pty Ltd. Sydney Toll free for Australia: 1800 SMA AUS (1800 762 287) International: +61 2 9491 4200	Other countries	International SMA Service Line Niestetal 00800 SMA SERVICE (+800 762 7378423)

ENERGY
THAT
CHANGES

