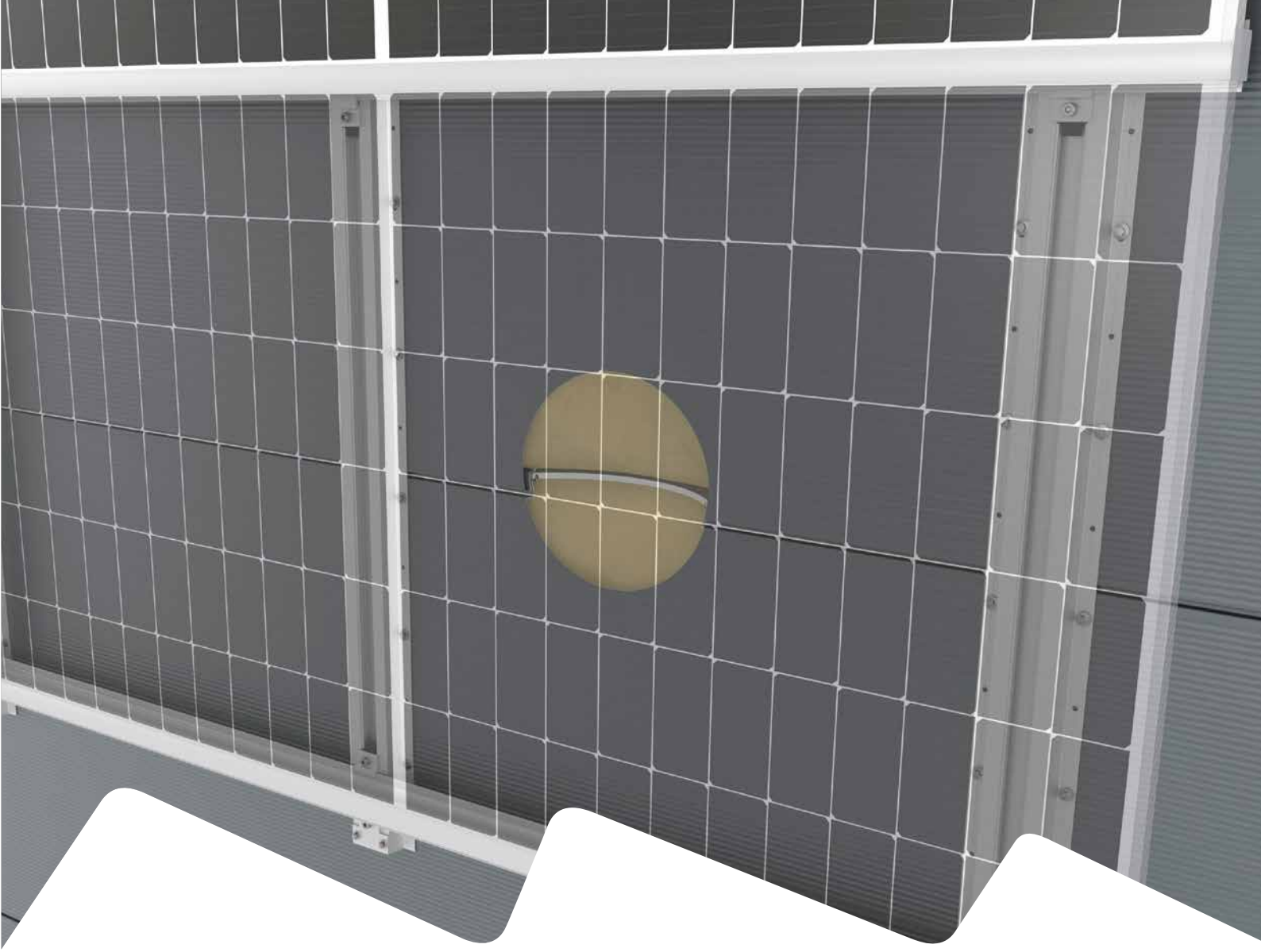

Assembly Manual

WallPV CarrierRail

InsertionRail

Connecting Strength

k2-systems.com

Inhalt

- **Tools overview** 3
- **General safety information** 4
- **The following guidelines apply** 5
  - Facade requirements 5
  - Important mounting instructions 5
- **Components** 6
  - Assembly on sandwich panels 6
- **Assembly** 8
  - Portrait/landscape 8
- **Optional** 16
  - InsertionRail Cover 16
  - TerraGrif K2U17 17
  - TerraGrif PL 17
- **Notes** 18

Quality tested - multiple certifications

K2 Systems stands for secure connections, highest quality and precision. Our customers and business partners have known that for a long time. Independent institutes have tested, confirmed and certified our capabilities and components.

Please find our quality and product certificates under:
k2-systems.com

Tools overview

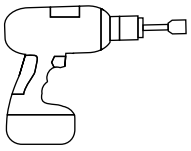



6 mm



8 mm



6 - 35 Nm
(4,5 - 22,2 lb-ft)



4/6 mm



4/6 mm

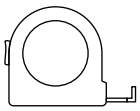

≥ 3,0 m



≥ 6,0 m



Digital Toolbox

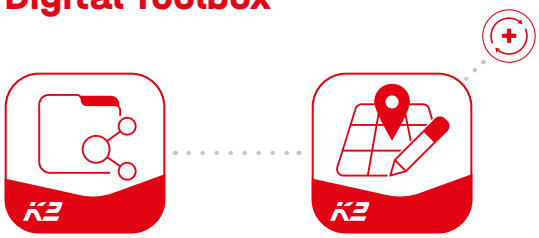

Do you already know our digital services? Use our K2 DocuApp now and record the first important data directly at the customer or project site.

Simply transfer the data to our online planning software K2 Base. Here you can plan your project easily, safely and quickly. You receive a detailed project report with assembly plan and static report. The K2+ interface enables seamless project data transfer to the planning tools of well-known inverter manufacturers or yield planning tools.

With the K2 DocuApp, project documentation is done quickly and easily - without any annoying paperwork.

Get started and register now:

docuapp.k2-systems.com

base.k2-systems.com

General safety information

Please note that our general mounting instructions must be followed at all times and can be viewed online at k2-systems.com

- The equipment may only be installed and operated by qualified and adequately trained installers.
- Prior to installation, ensure that the product complies with on-site static loading requirements.
  For WallPV systems, the load-bearing capacity of the facade must always be checked.
- National and local building regulations and environmental requirements must be adhered to.
- Compliance with health and safety regulations, accident prevention guidelines and applicable standards is required.
  - Protective equipment such as safety helmet, boots and gloves must be worn.
  - Facade works must be in accordance with local regulations and must utilise fall protection safegards when working height exceeds 3m.
  - At least two people must be present for the duration of the installation work in order to provide rapid assistance in the event of an emergency.
- K2 mounting systems are continuously developed and improved and the installation process may thereby change at any time. Prior to installation consult our website at k2-systems.com for up-to-date instructions.We can send you the latest version on request.
- The assembly instructions of the module manufacturer must be adhered to.
- Equipotential bonding/grounding/earthing between individual parts is to be performed according to country specific standards, as well as national laws and regulations.
- At least one copy of the assembly instructions should be available on site throughout the duration of the installation.
- Failure to adhere to our general safety and assembly instructions and not using all system components, K2 is not liable for any resulting defects or damages. We do not accept liability for any damage resulting in the use of competitor's parts. Warranty is excluded in such cases.
- German law shall apply excluding the UN Convention on CISG. Place of venue is Stuttgart. Our General Terms of Business apply.
- If all safety instructions are adhered to and the system is correctly installed, there is a product warranty entitlement of 12 years! We strongly recommend reviewing our terms of guarantee, which can be viewed at k2-systems.com. We will also send this information on request.
- Dismantling of the system is performed in reverse order to the assembly.
- K2 stainless steel components are available in different corrosion resistance classes. Each structure or component must be carefully checked for possible corrosion exposure.

The following guidelines apply

This system can be used without further testing by K2 systems under the following standard conditions. It is also suitable for higher requirements, however if a value exceeds the standard conditions, please contact K2 Systems.

Facade requirements

- The wall structure to which the PV mounting system is attached must have sufficient load-bearing capacity to absorb the additional loads generated by the PV system.
- The load-bearing capacity of the mounting substrate must be checked against the substrate assumed in the calculation before starting the installation work.
- It must be checked that the technical specifications of the wall construction, e.g. material, wall thickness, etc. correspond to the specifications of the static calculation.
- Sheet quality steel at least S235 acc. DIN EN 10025-1
- Minimum tensile strength for aluminium 165 N/mm²

Important mounting instructions

- On-site general standards and regulations for lightning protection must be observed and consultation with a specialist to create a lightning protection concept is recommended (use lightning protection clamp if necessary). It should be noted that the installation direction is from bottom to top. Country-specific regulations must be observed.
- After 13.6 m (vertical) and 21.0 m (horizontal) a thermal separation must be installed. Fire protection regulation may specify a value less than 13.6 m (vertical) and 21.0 m (horizontal) and must be adhered to.
- Depending on the sandwich wall element, minimum distances in relation to the tongue and groove connection must be observed when screwing the CarrierRail.
- The distance between the CarrierRail screw fixings and the joint profile connection of the sandwich panels must be at least 15 cm.
- Horizontal distance between the modules must be at least 5 mm (ModuleSafety).
- Country-specific construction approval may be required from the CarrierRail on the sandwich panel.
- The country-specific requirements for the modules when mounted on the facade must be observed.
- The country-specific rules for fire protection on the facade must be observed. If necessary, the system must be assessed by a fire protection expert.
- The country-specific rules for rear ventilation of the facade must be observed.

Components

Assembly on sandwich panels

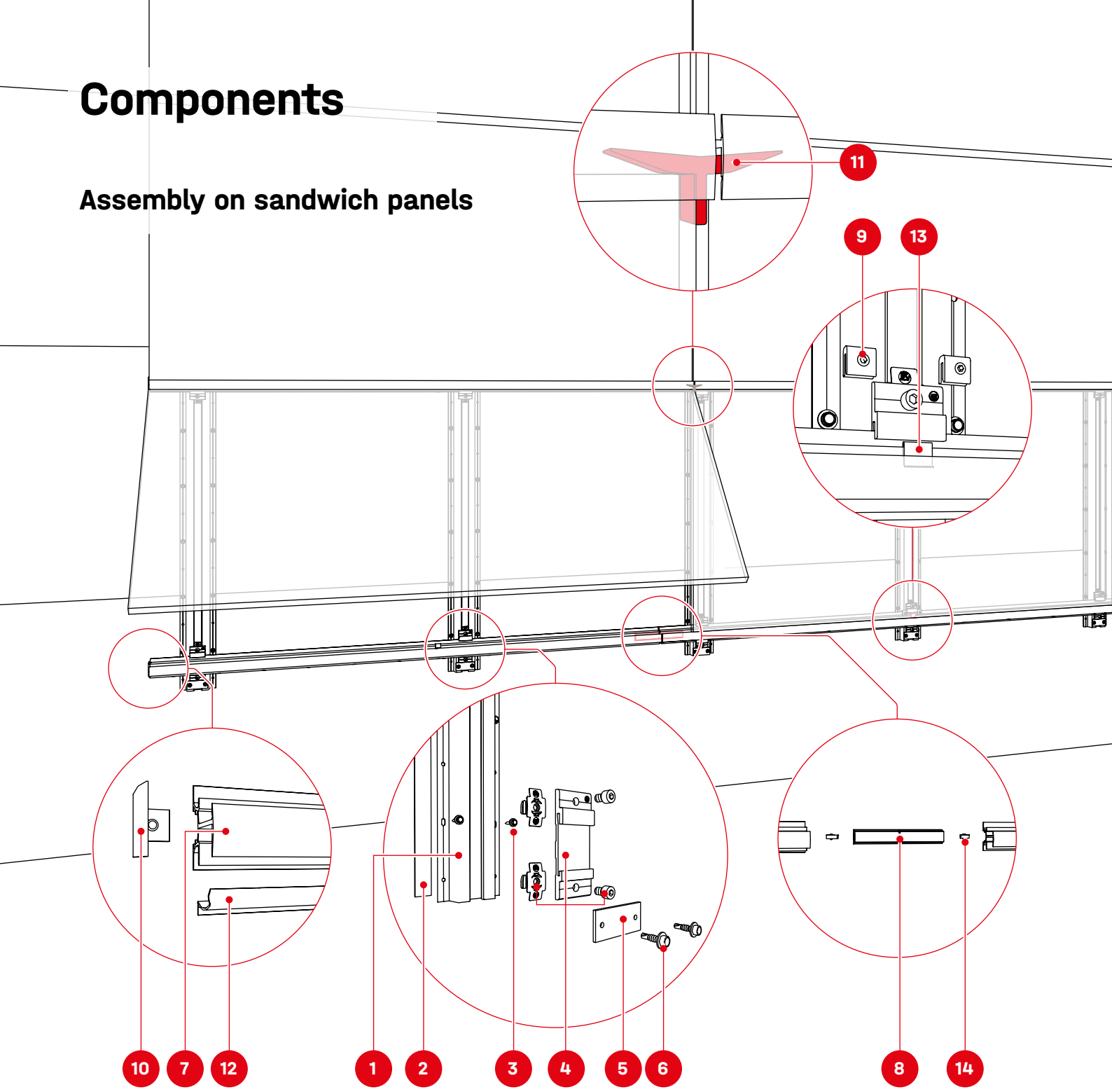

1 Item number system-specific
CarrierRail silver

2 2001015
CarrierRail EPDM

3 2005033
Thread-forming metal screw 5,5 × 25

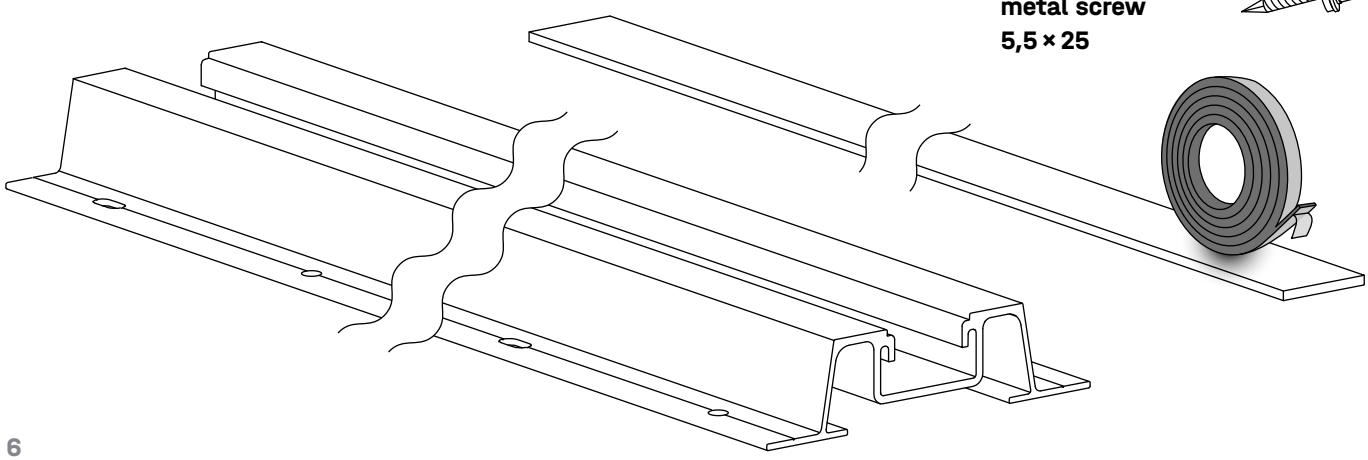

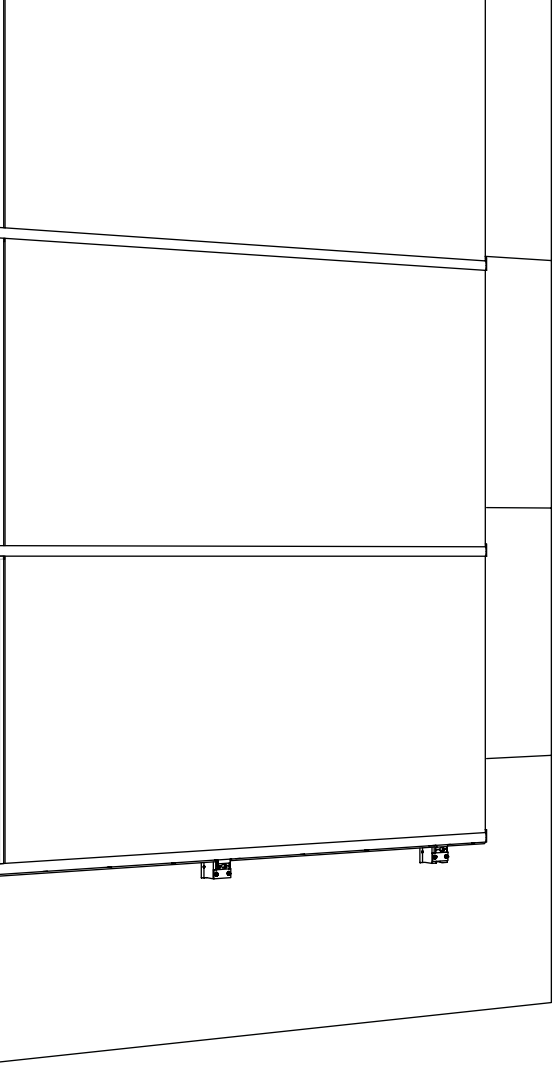

4 2004374/2004375
CrossConnector 2.0 set silver/black

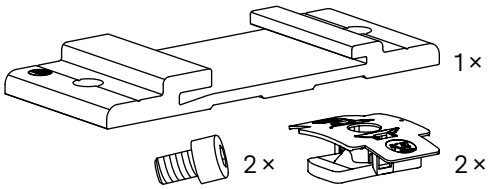

5 2004288
CarrierRail AntiSlip Plate

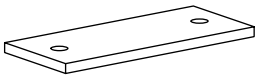

6 2004432
Self-tapping metal screw 5,5 × 19



7 Item number system-specific
InsertionRail 2.0 silver/black

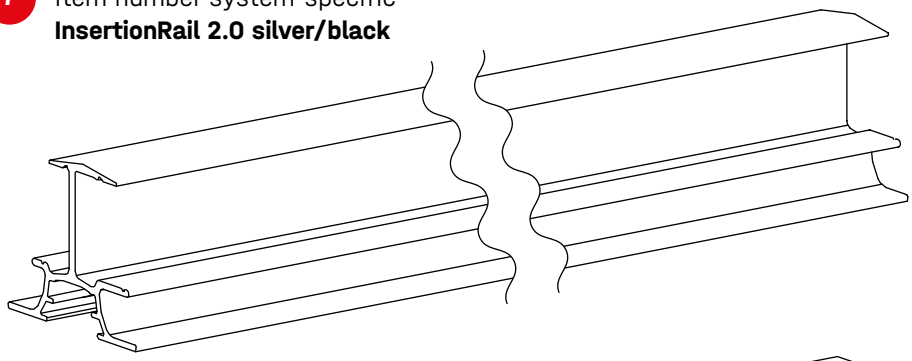

8 2004355/2004322
RailConnector 2.0 silver/black

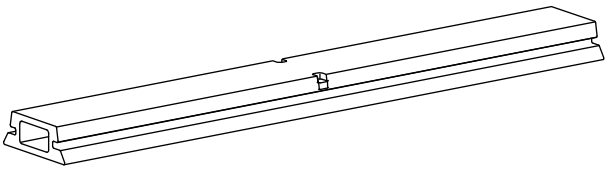

9 2004370
FixStop 2.0



10 2004372/2004373
EndStop 2.0 silver/black

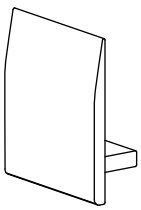

11 2004290
ModuleSafety

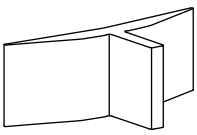

Optional

12 Item number system-specific
InsertionRail 2.0 Cover silver/black

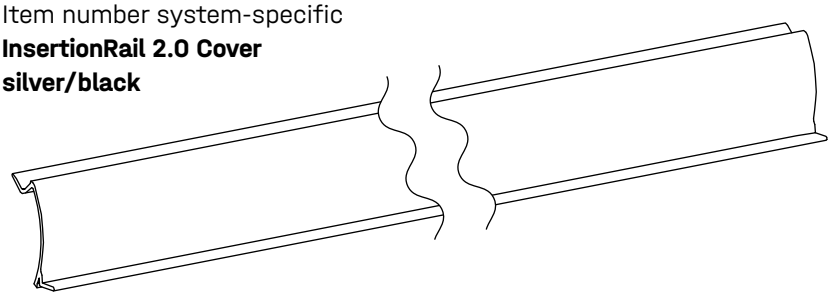

2002870
Cable Manager

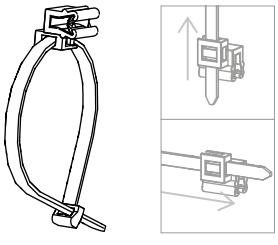

13 2000056
TerraGrif K2U17



14 2004102
TerraGrif PL



Assembly

Portrait/landscape

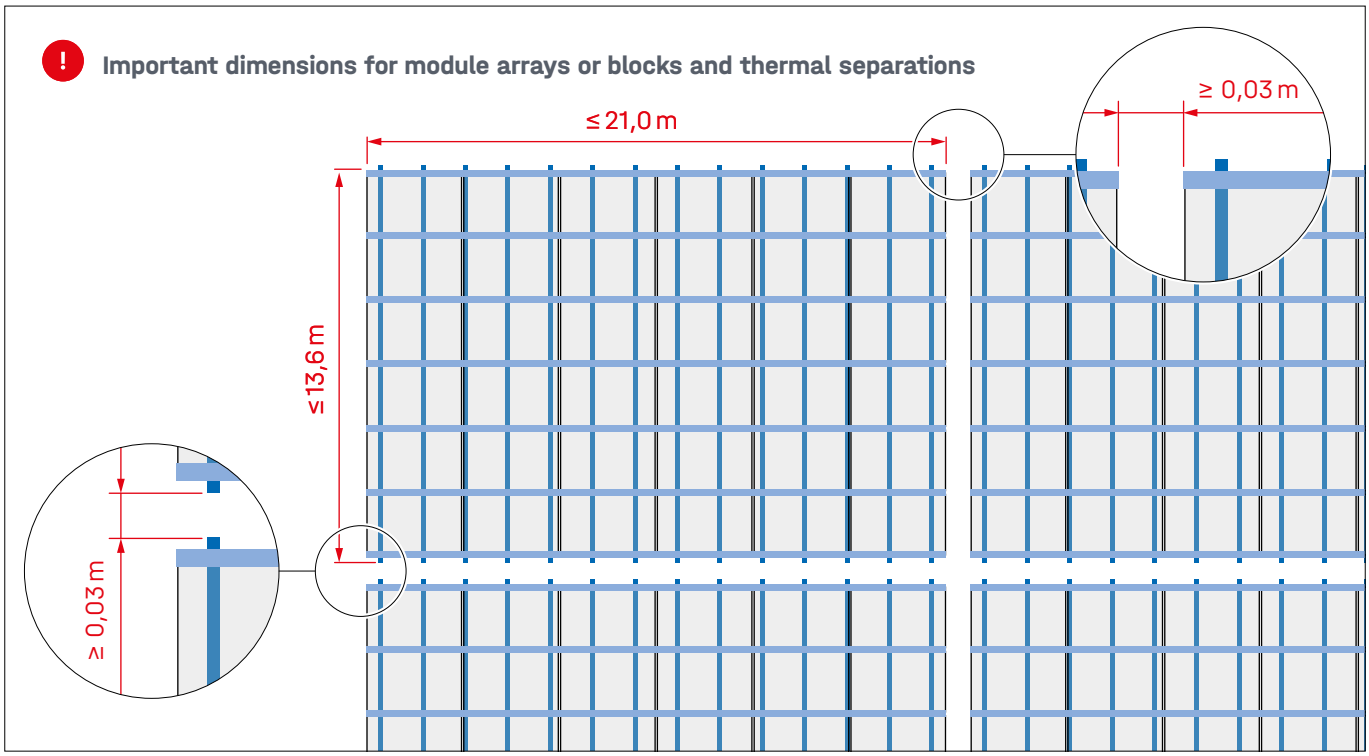

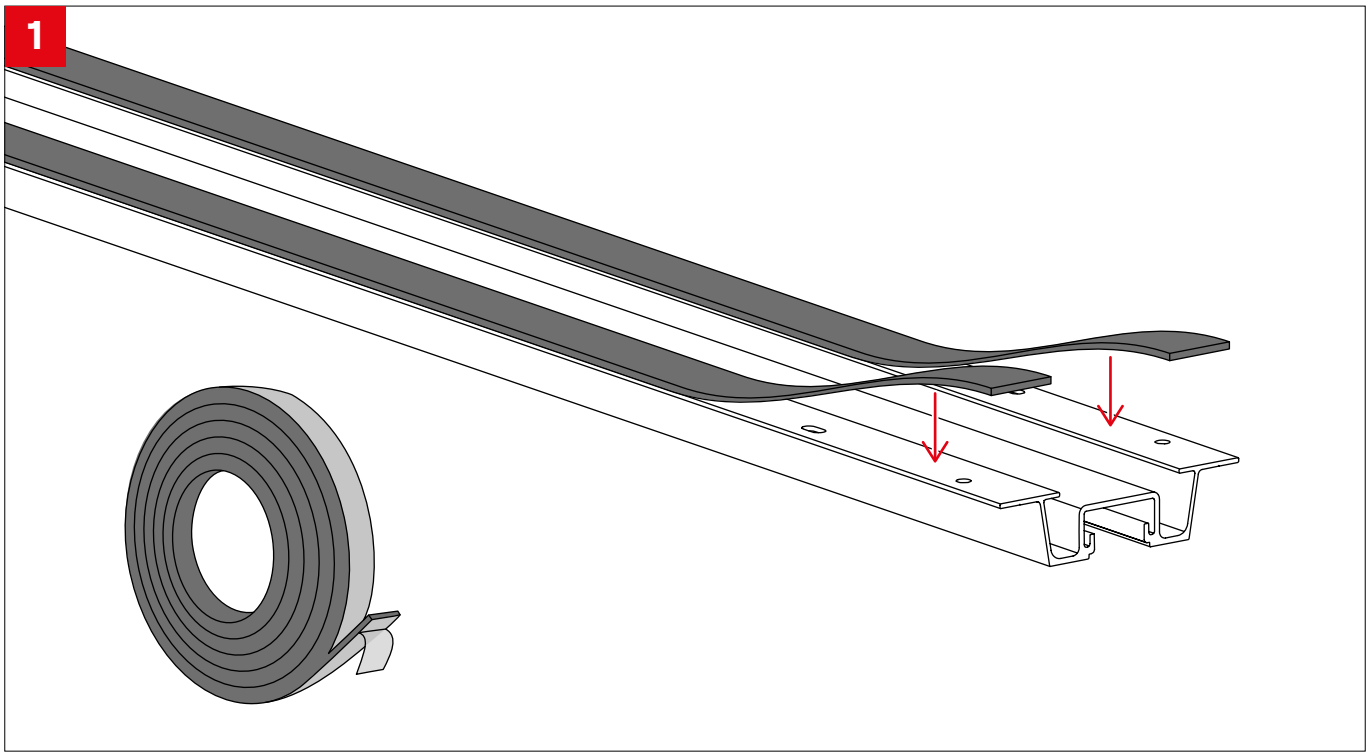

2a

For each CarrierRail, 2 screws must be placed in the round holes approximately in the centre of the CarrierRail (round hole fixed bearing 1). All other screws must be placed in the centre of the slotted holes (slotted hole floating bearing 2).

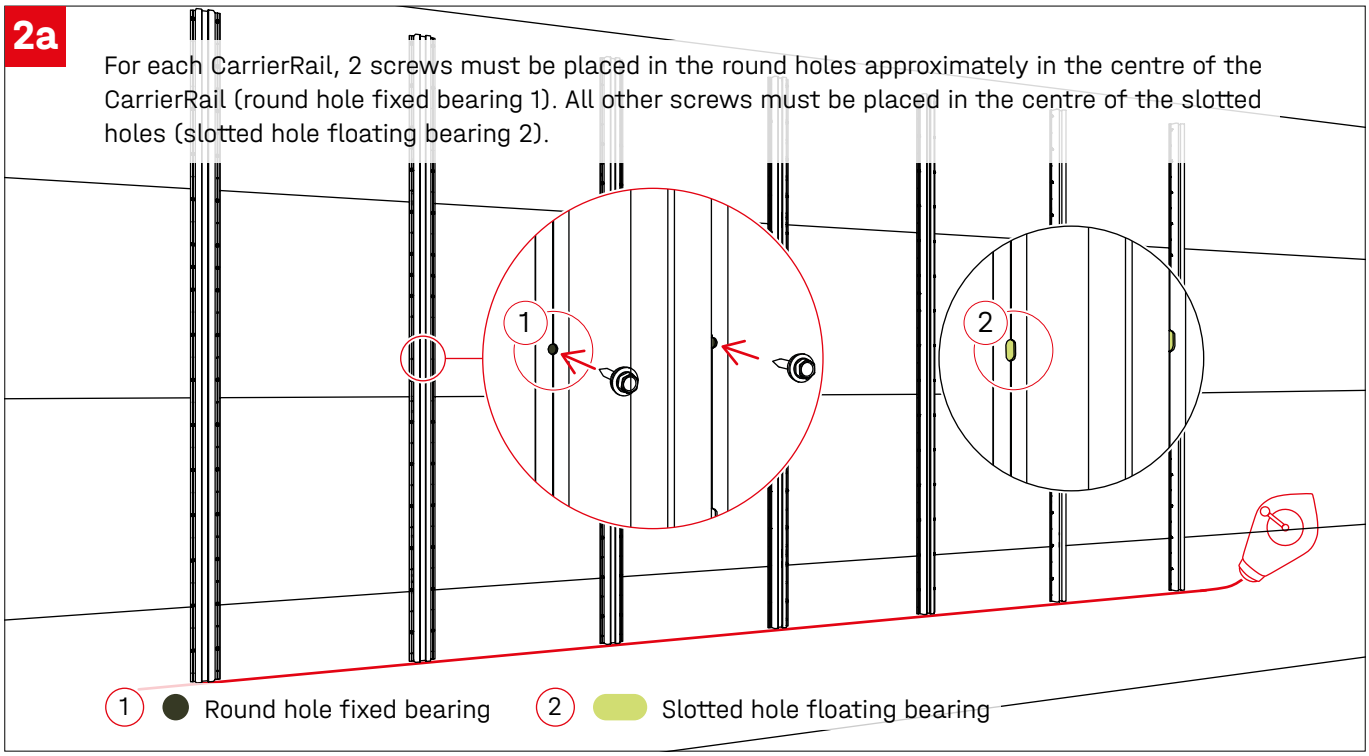

2b

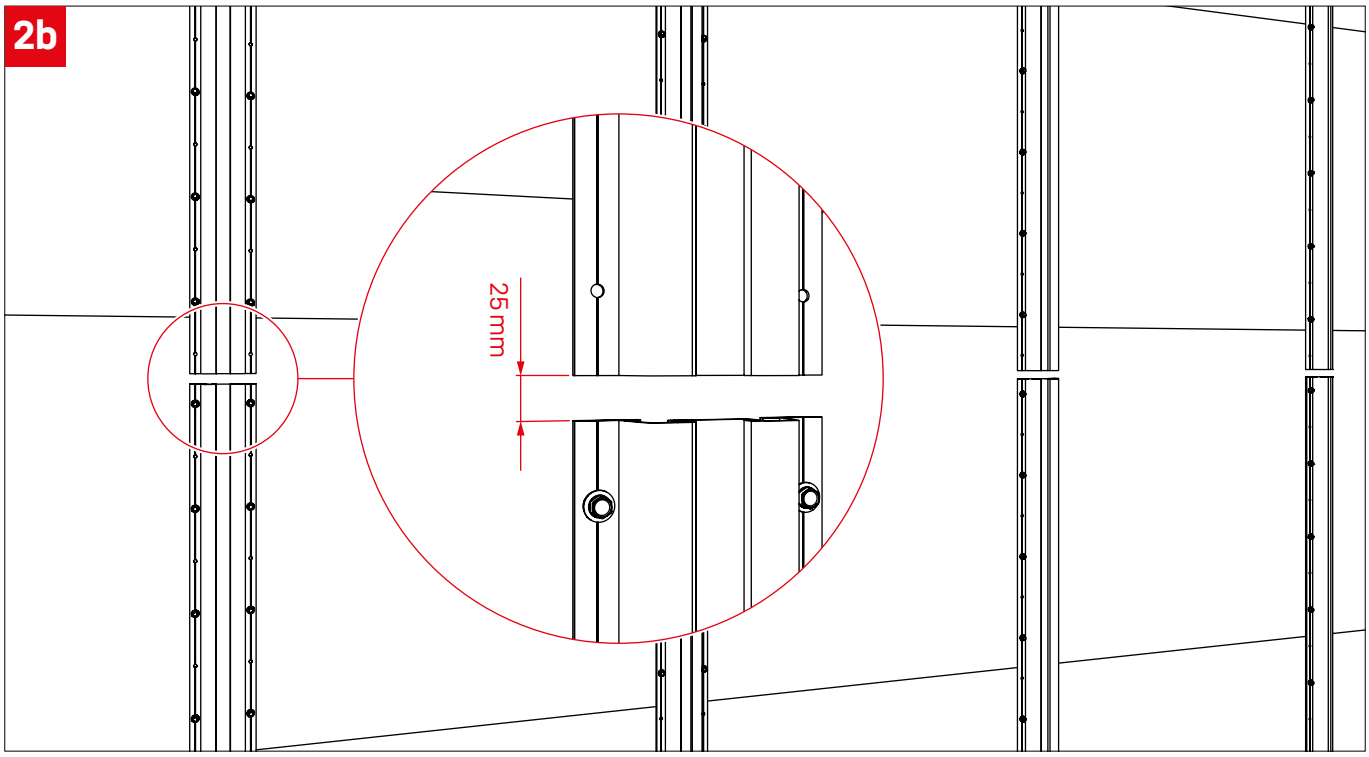

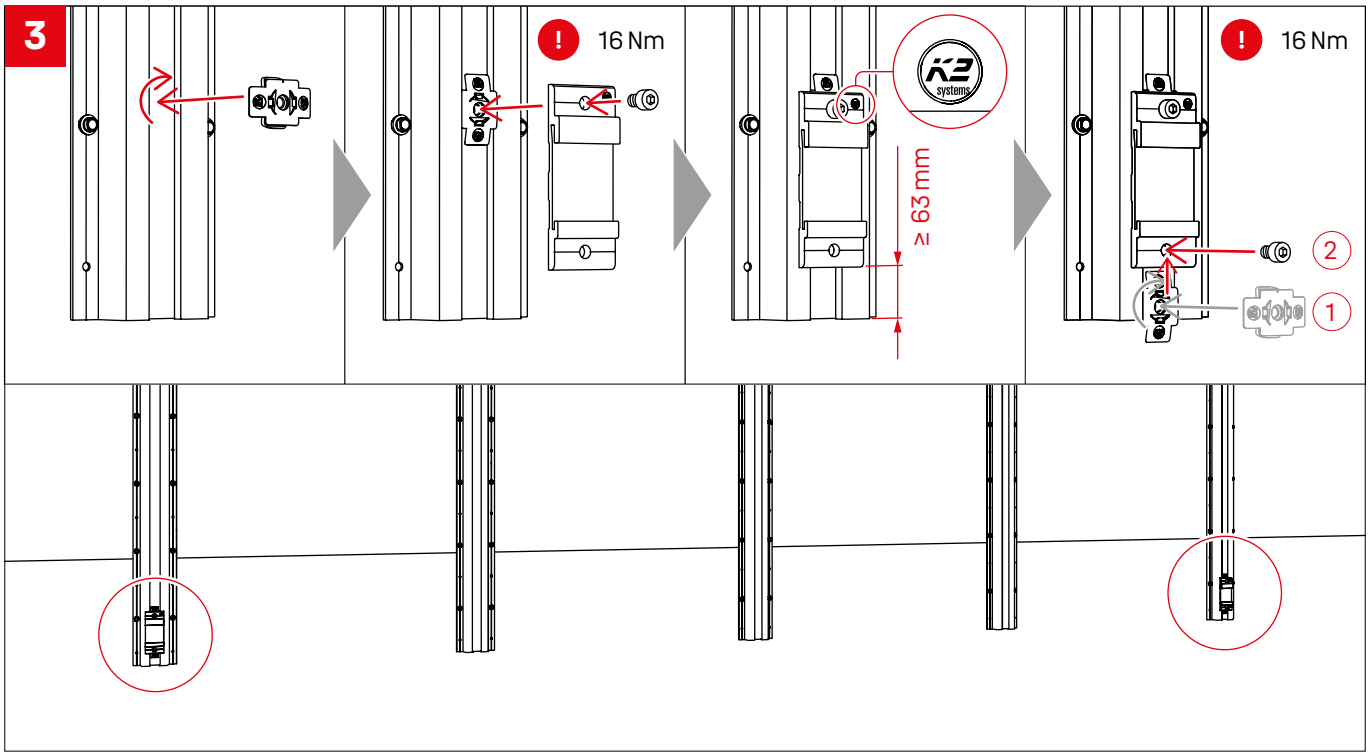
3
16 Nm
≥ 63 mm
16 Nm
2
1

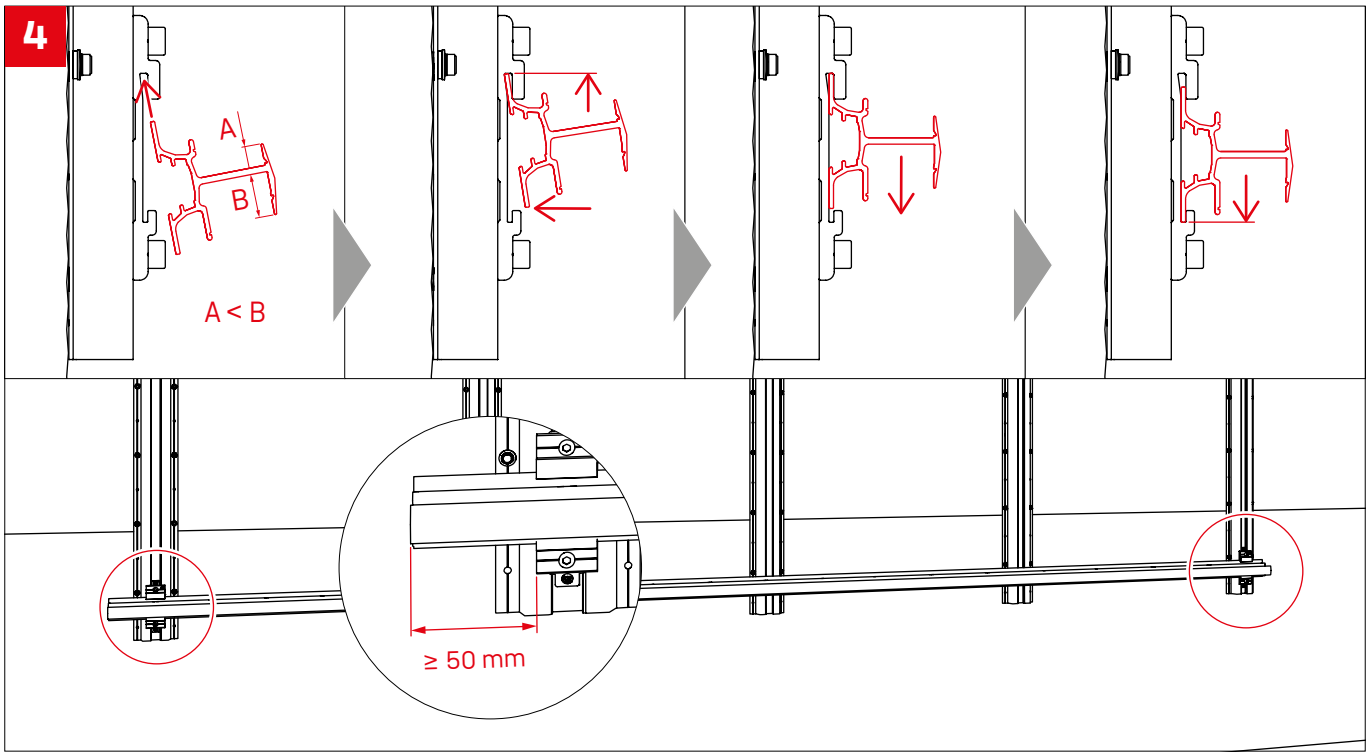
4
A
B
A < B
≥ 50 mm

5

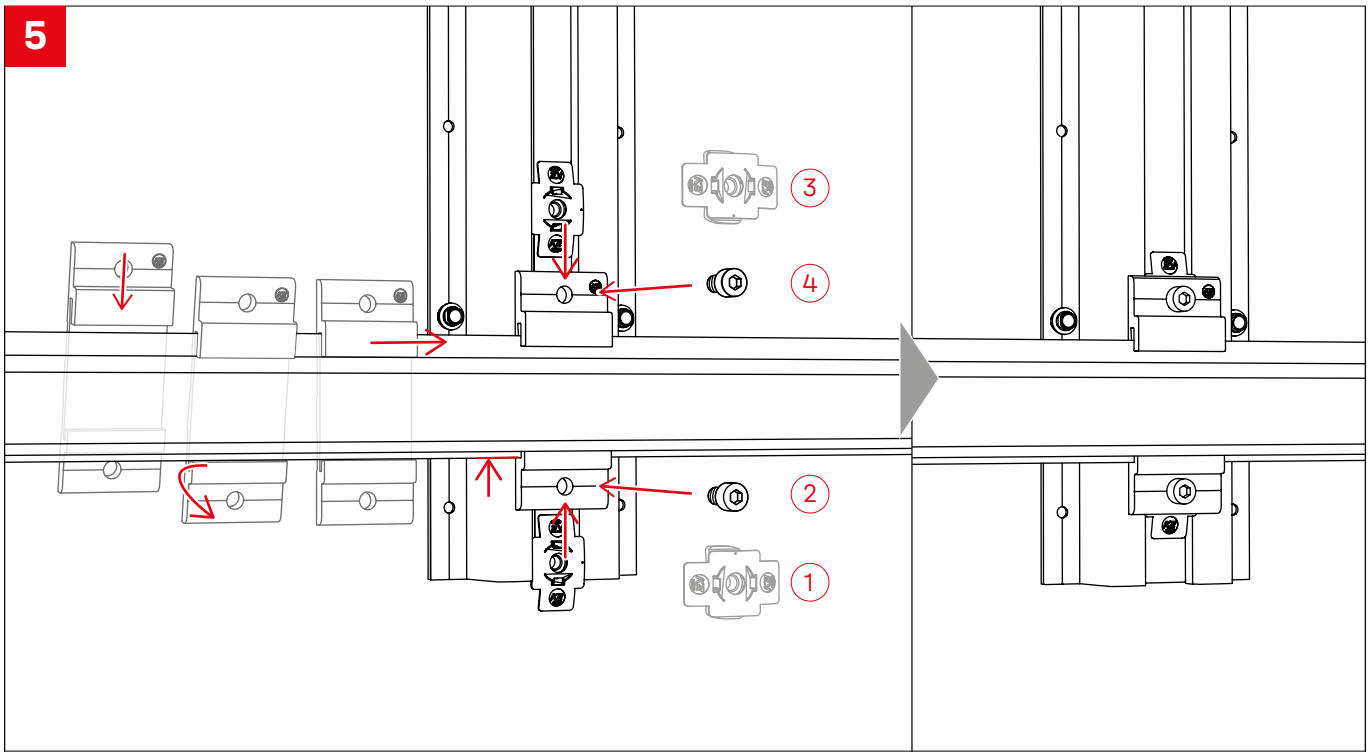

6

! Every fourth CrossConnector must be rotated 180° to secure the rail vertically. Rotated CrossConnectors must not be placed at the end of the rail.

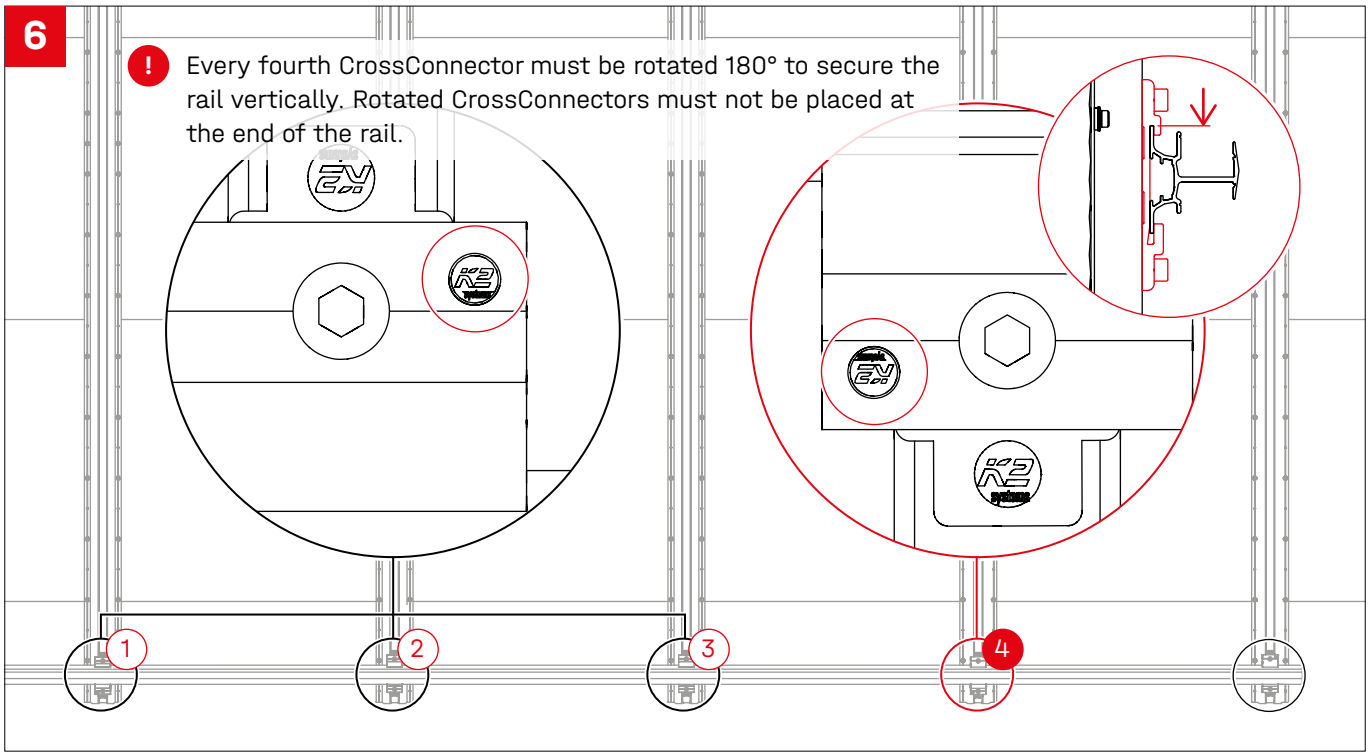

7

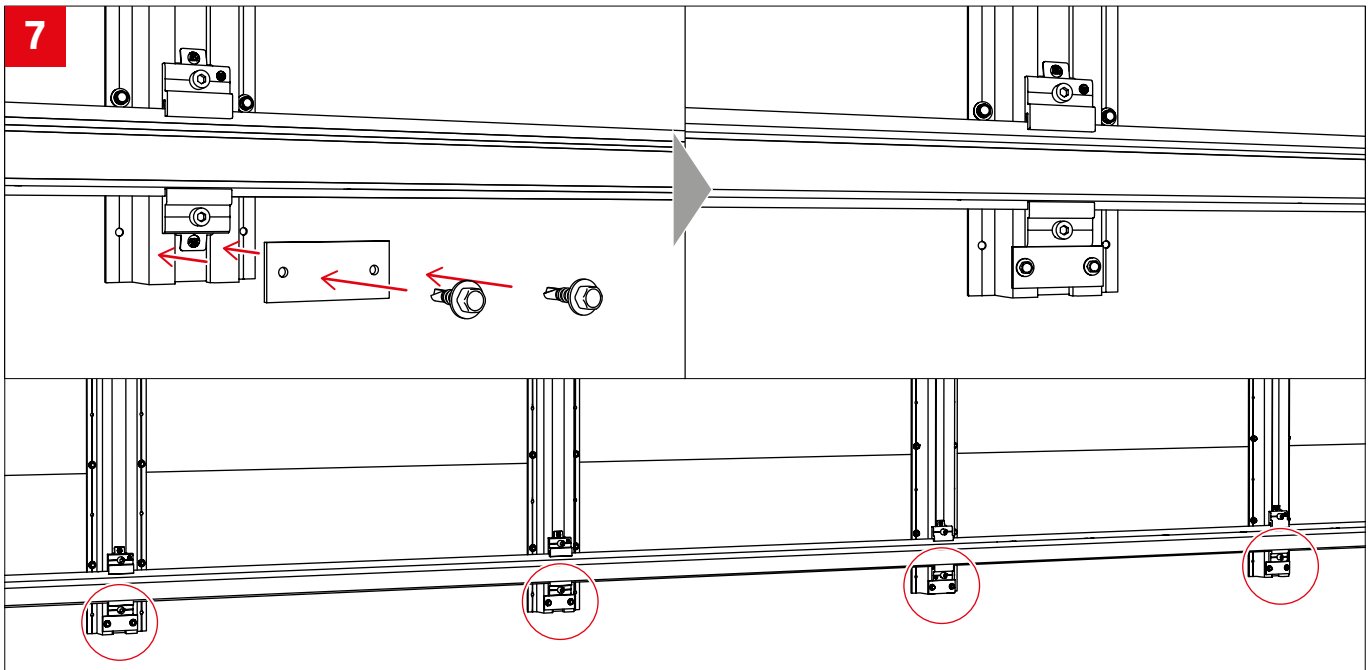

Attach the CarrierRail AntiSlip Plate to the lowest CarrierRail row under the CrossConnectors.

8

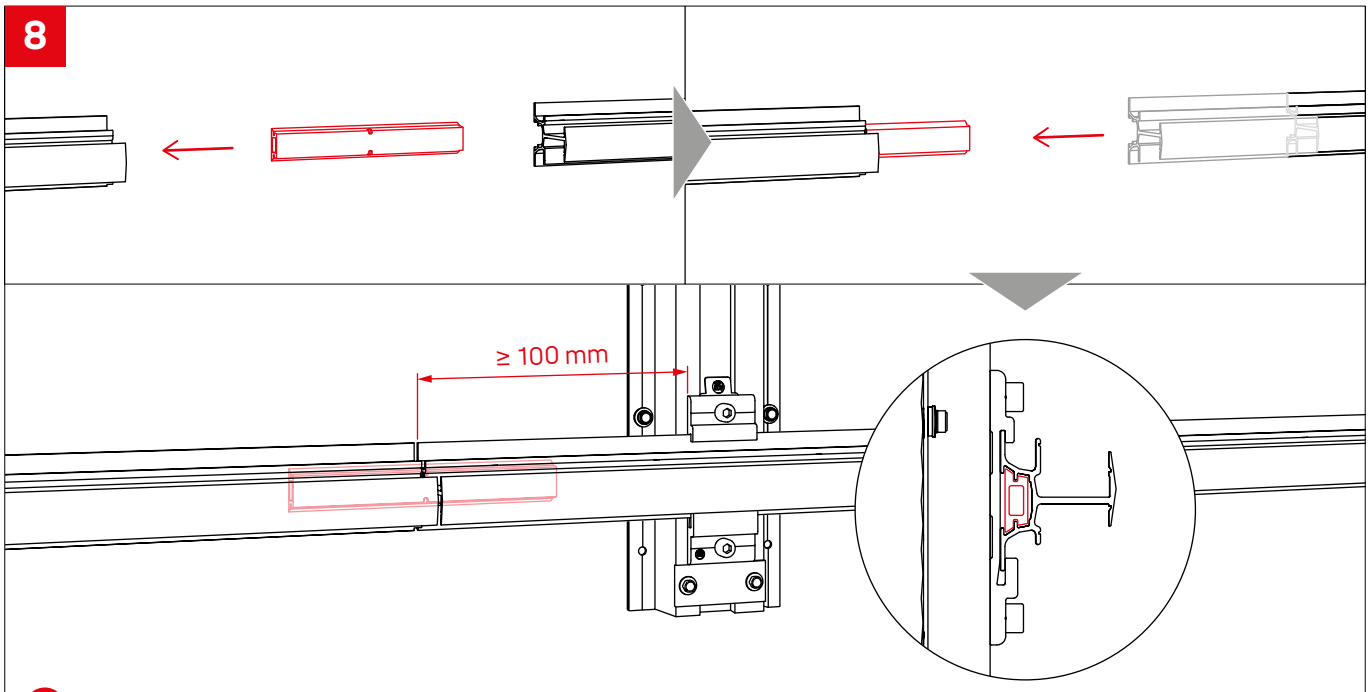

! Optional: Consider step „TerraGrif PL“ on page 17 for establishing equipotential bonding.

FixStop positioning

9a

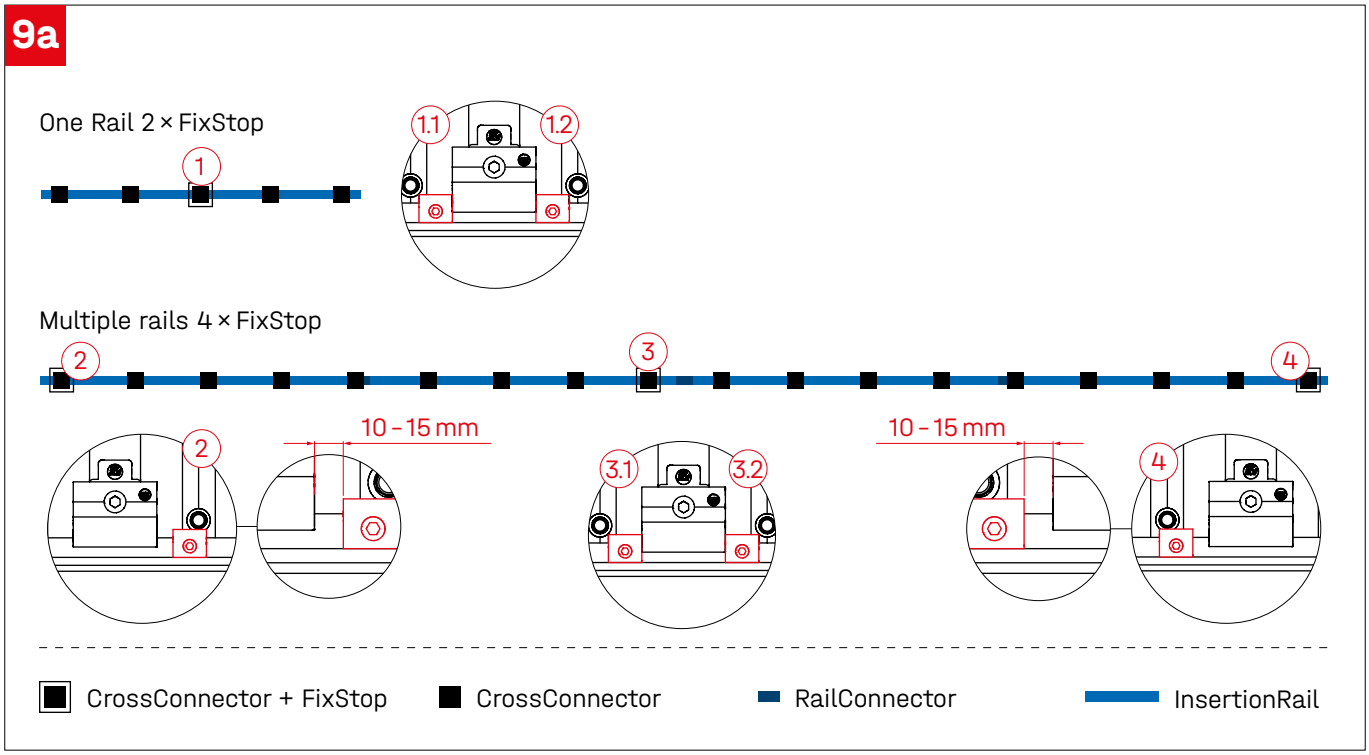

9b

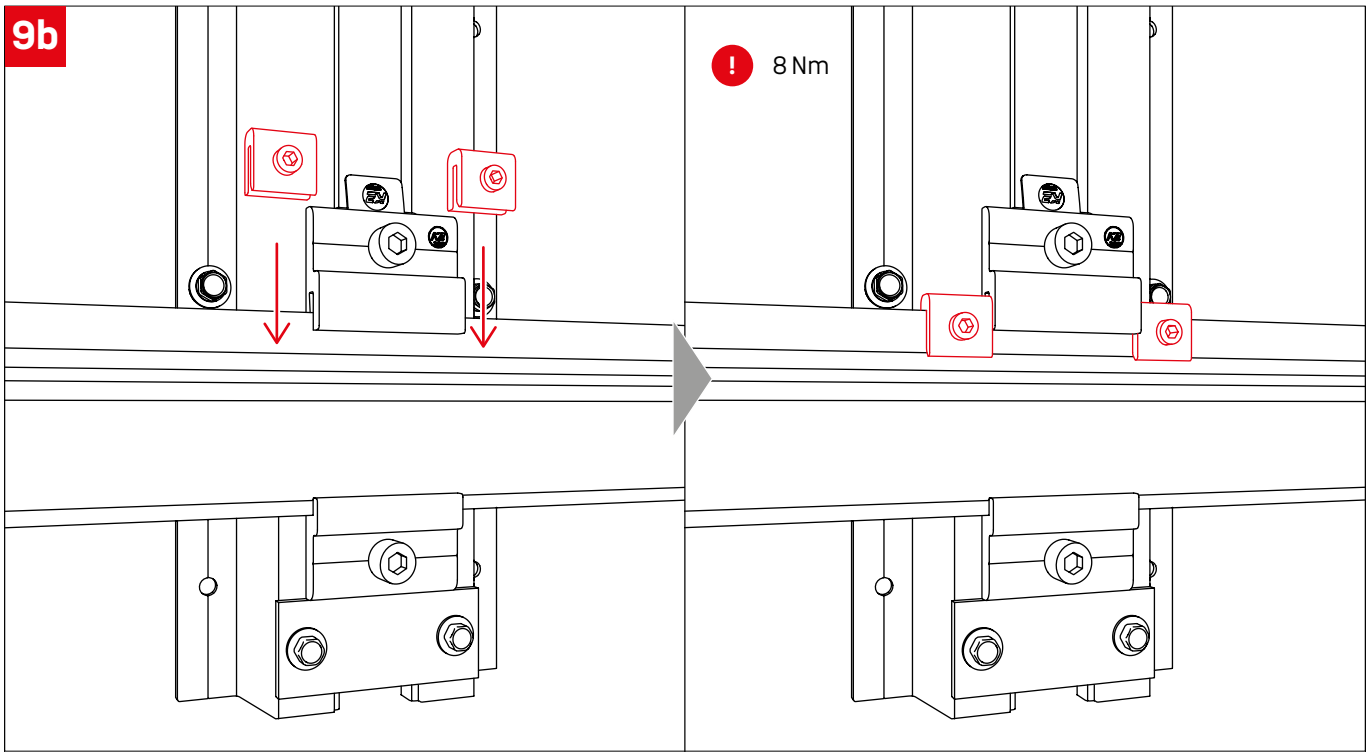

10

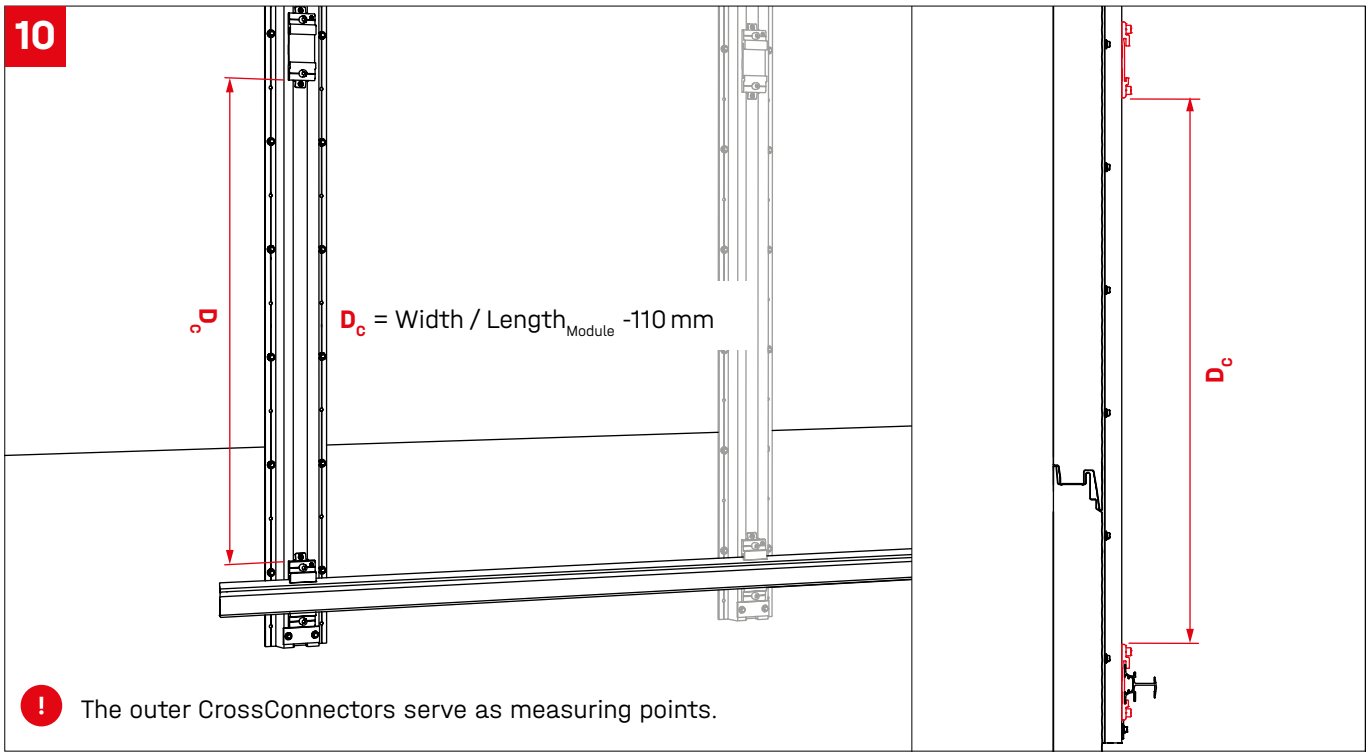

! The outer CrossConnectors serve as measuring points.

11

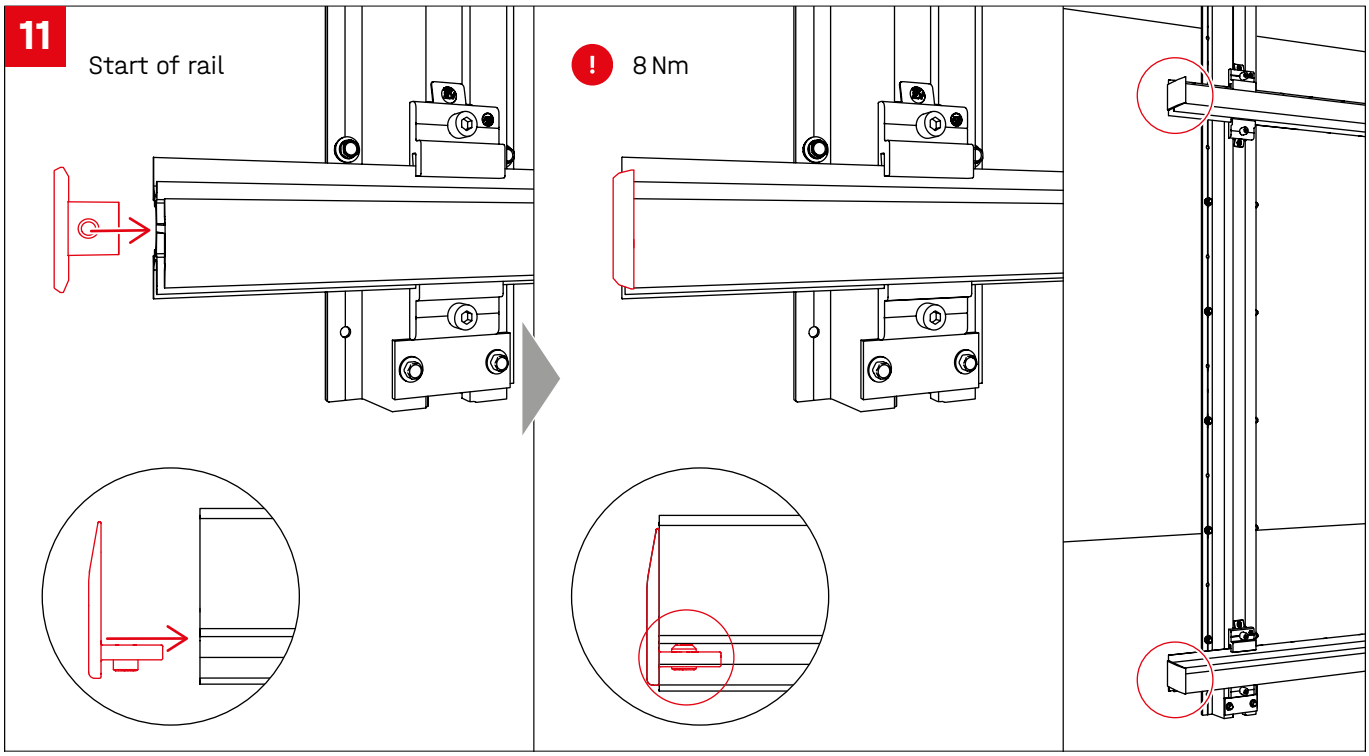

12

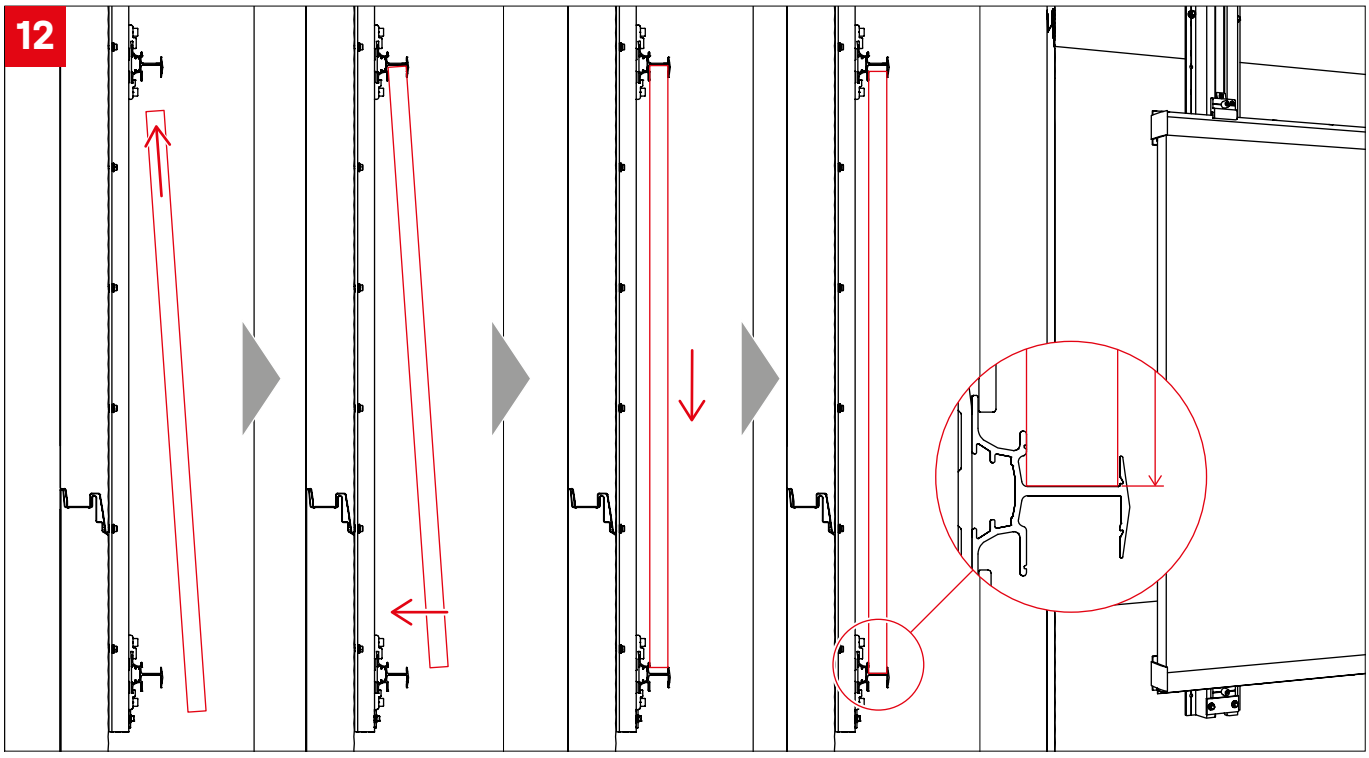

Optional: Consider step „TerraGrif K2U17“ on page 17 for module frame earthing.

13

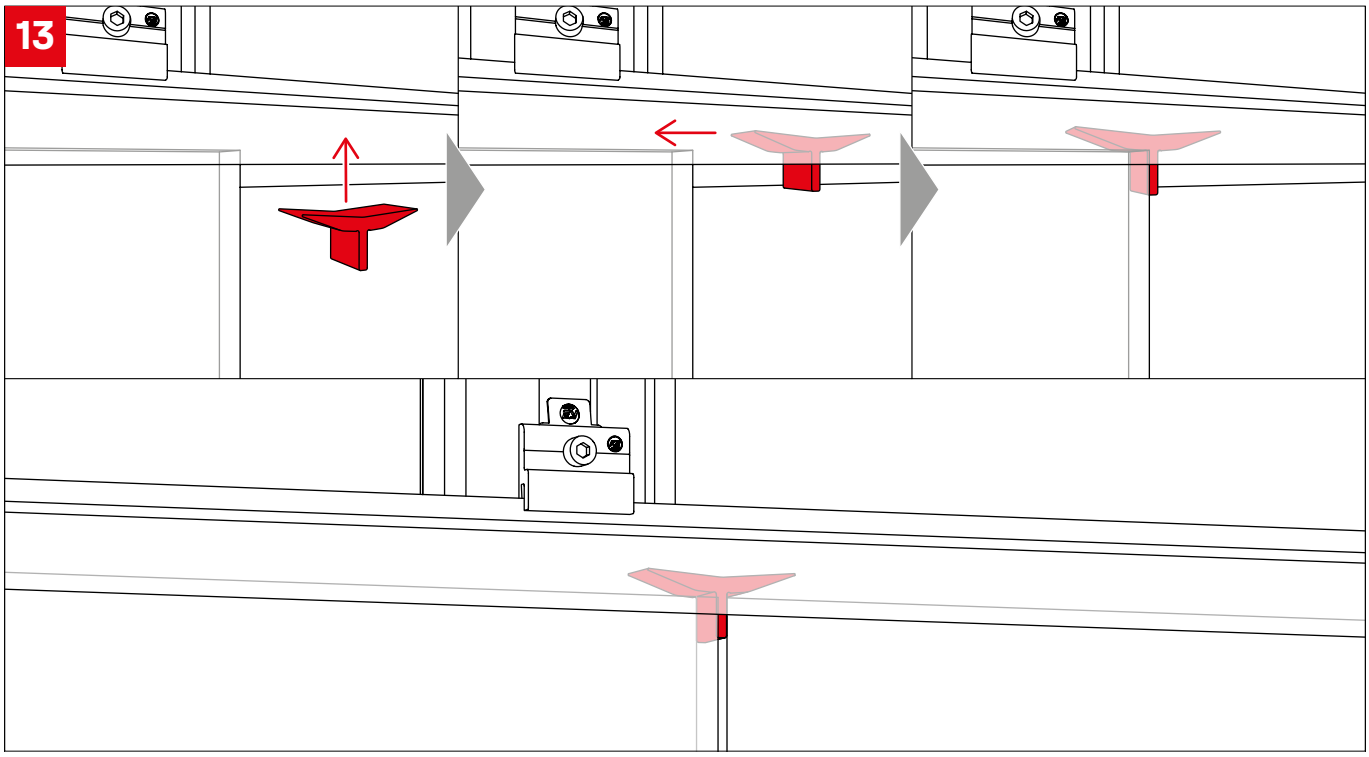

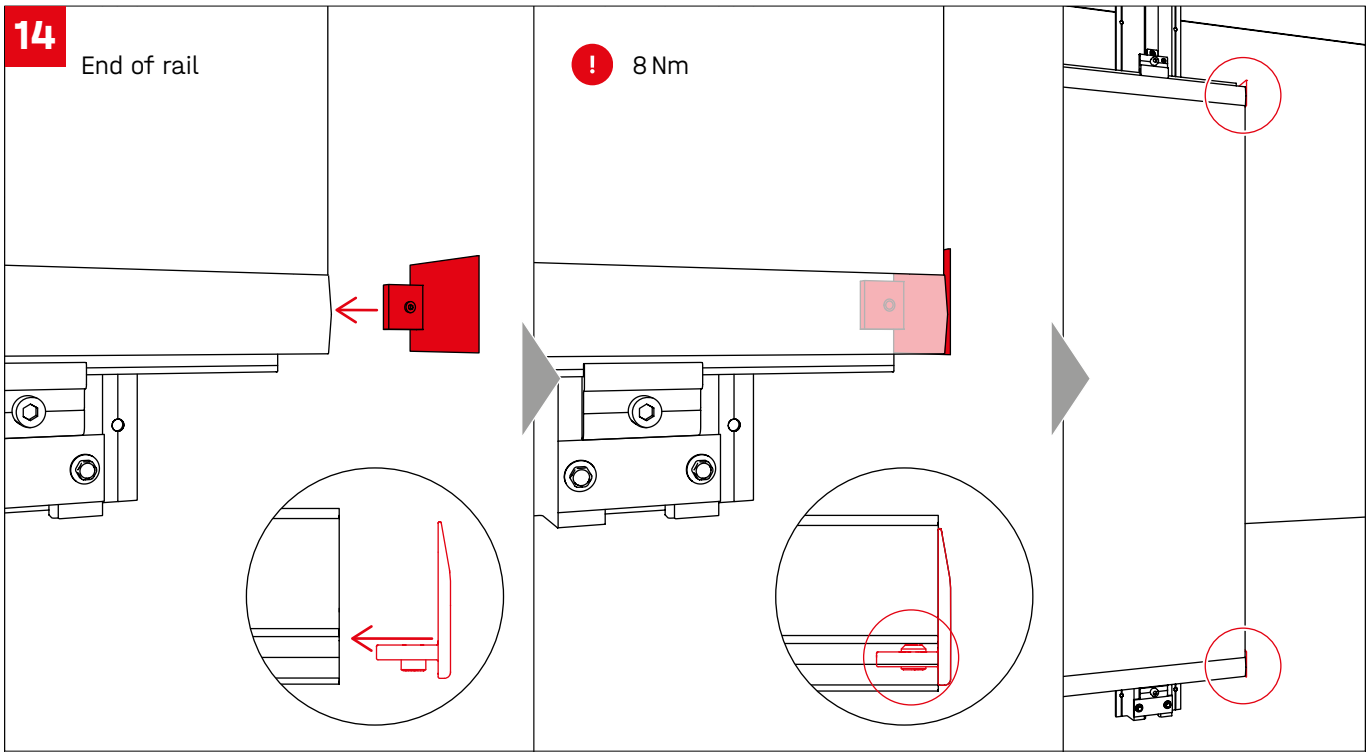

Optional InsertionRail Cover

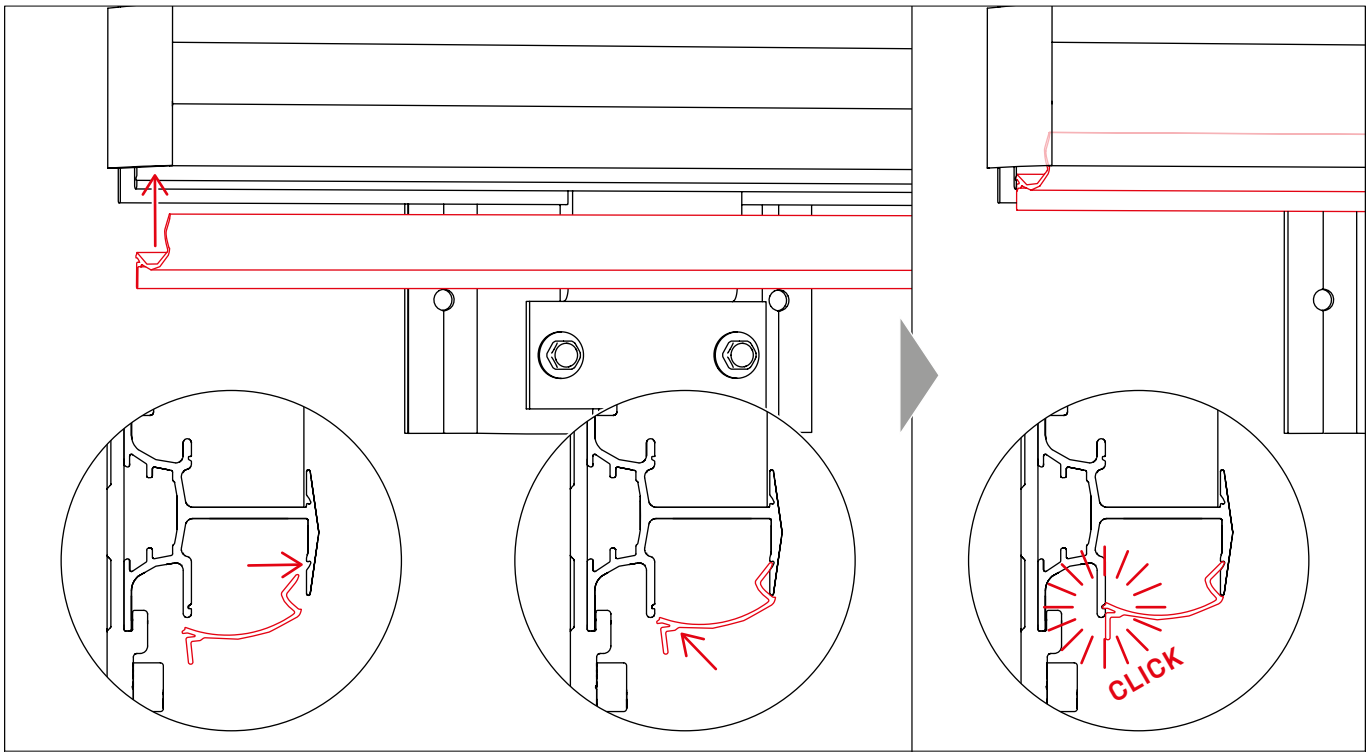

Optional

TerraGrif K2U17

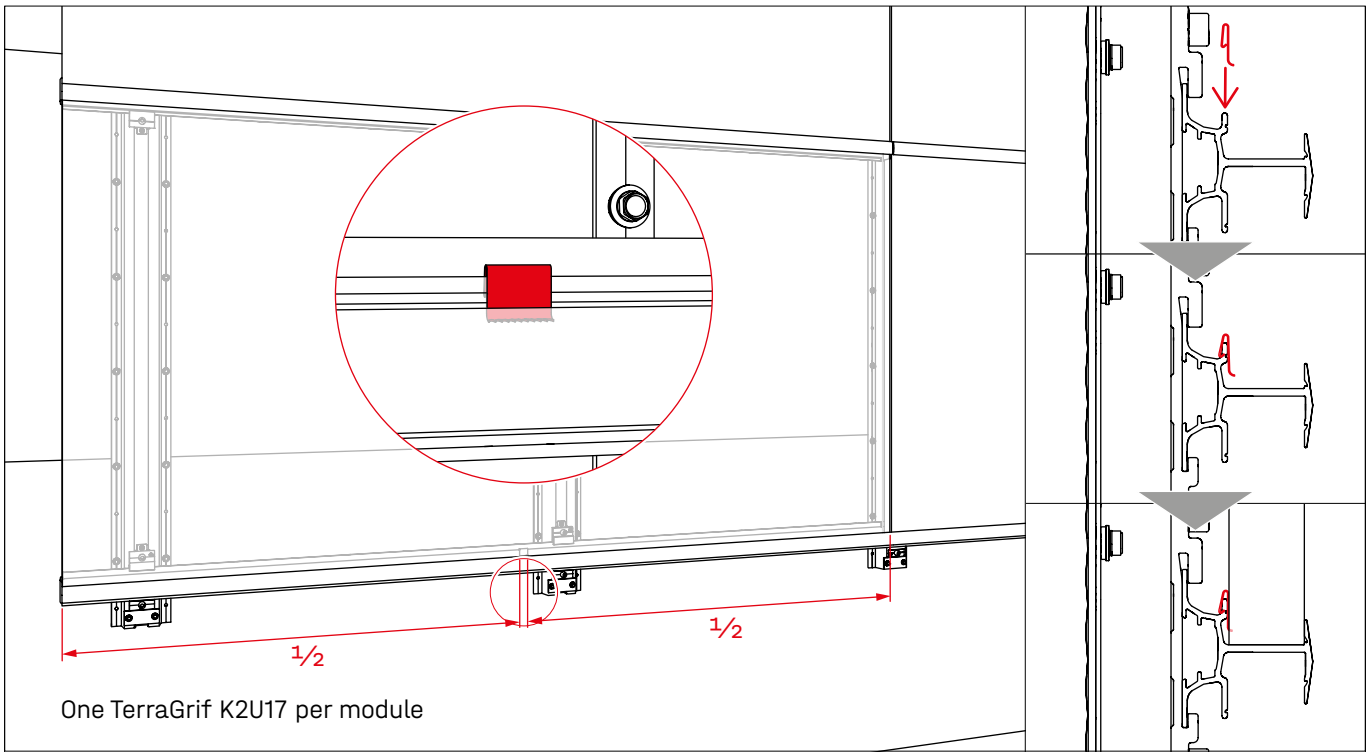

One TerraGrif K2U17 per module

TerraGrif PL

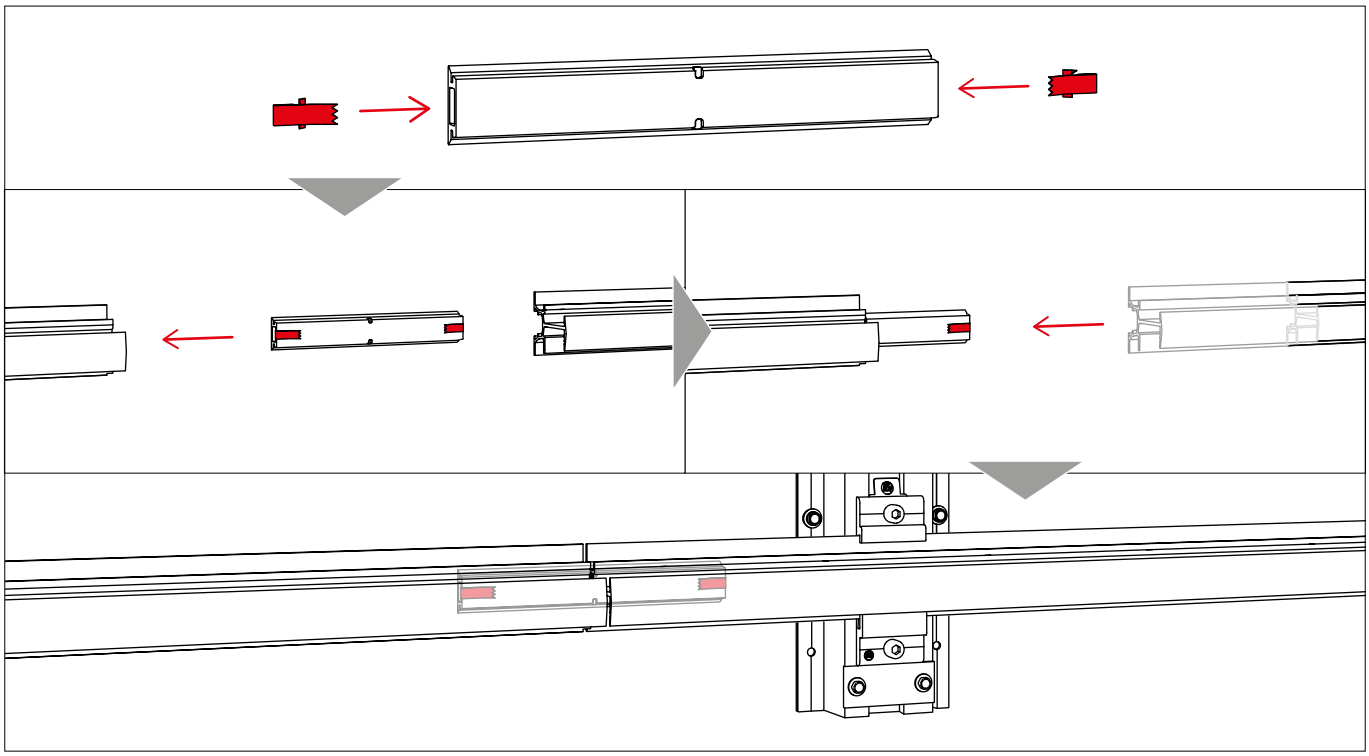

Notes

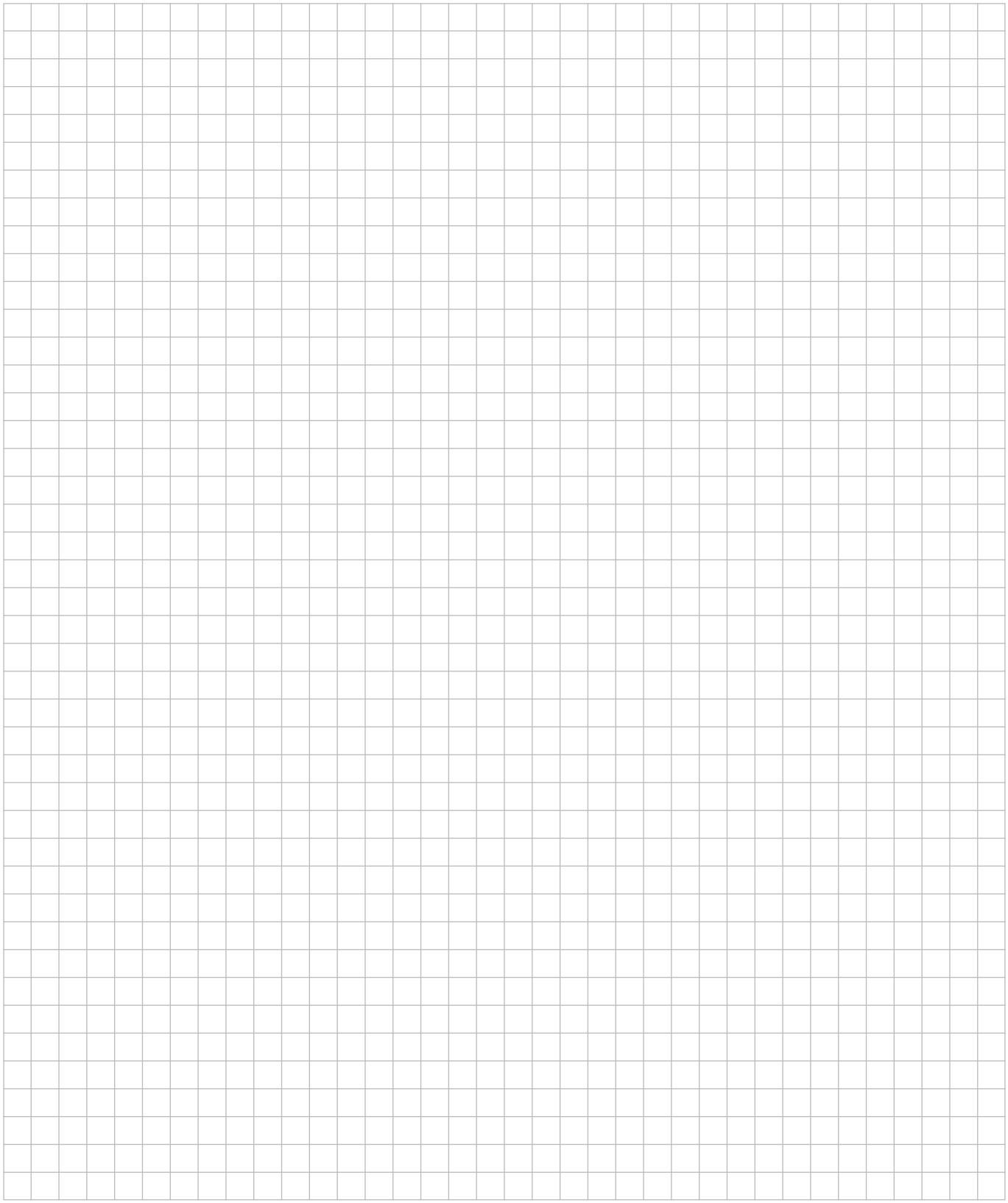

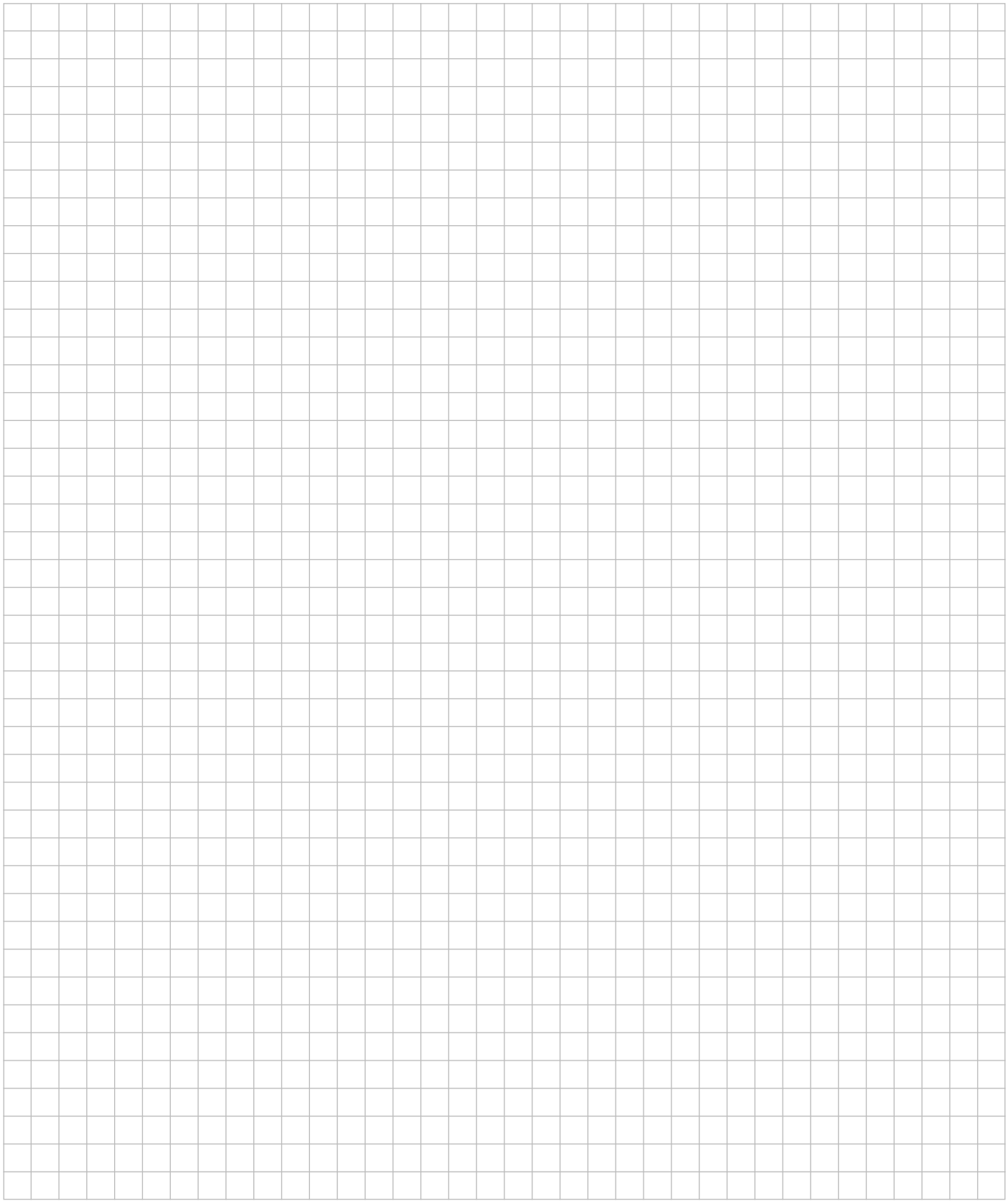

Thank you for choosing a K2 mounting system.

Mounting ystems from K2 Systems are quick and easy to install. We hope these instructions have helped. Please contact us with any questions or suggestions for improvement. Our contact data:

- **k2-systems.com/en/contact**
- **Service Hotline: +49 (0)7159 42059-0**

Our General Terms of Business apply. Please refer: k2-systems.com

K2 Systems GmbH
Haldenstraße 1 · 71272 Renningen · Germany
+49 (0) 7159 - 42059 - 0 · info@k2-systems.com · k2-systems.com

WallPV CarrierRail InsertionRail Assembly EN V1 | 0524
· Subject to change · Product illustrations are exemplary and may differ from the original.