Mounting systems for solar technology



ASSEMBLY INSTRUCTIONS
MULTIANGLE SYSTEM

GB

GENERAL SAFETY INFORMATION

Please note that our general mounting instructions must be followed at all times and can be viewed online at www.k2-systems.com/en/downloads/product-information.html.

The following guidelines apply:

- The equipment may only be installed and operated by qualified and adequately trained installers.
- Prior to installation, ensure that the product complies with on-site static loading requirements. For roof-mounted systems, the roof load-bearing capacity must always be checked.
- National and local building regulations and environmental requirements must be adhered to.
- Compliance with health and safety regulations, accident prevention guidelines and applicable standards is required.
  - Protective equipment such as safety helmet, boots and gloves must be worn.
  - Roofing works must be in accordance with roofing regulations utilising fall protection safeguards when eaves height exceeds 3 m.
  - At least two people must be present for the duration of the installation work in order to provide rapid assistance in the event of an emergency.
- K2 mounting systems are continuously developed and improved and the installation process may thereby change at any time. Prior to installation consult our website at http://www.k2-systems.com/en/downloads/product-information.html for up-to-date instructions. We can send you the latest version on request.
- The module manufacturer's assembly instructions must be adhered to.
- Equipotential bonding / grounding / earthing between individual parts must be performed according to country specific standards, as well as national laws and regulations.
- At least one copy of the assembly instructions should be available on site throughout the duration of the installation.
- Failure to adhere to our general safety and assembly instructions and when not using all system components, K2 is not liable for any resulting defects or damages. We do not accept liability for any damage resulting in the use of competitor's parts. Warranty is excluded in such cases.
- If all safety instructions are adhered to and the system is correctly installed, there is a product warranty entitlement of 12 years. We strongly recommend reviewing our terms of guarantee, which can be viewed at www.k2-systems.com/en/downloads/product-information.html. We will also send this information on request.
- Dismantling of the system is performed in reverse order to the assembly.
- K2 stainless steel components are available in different corrosion resistance classes. Each structure or component must be carefully checked for possible corrosion exposure.

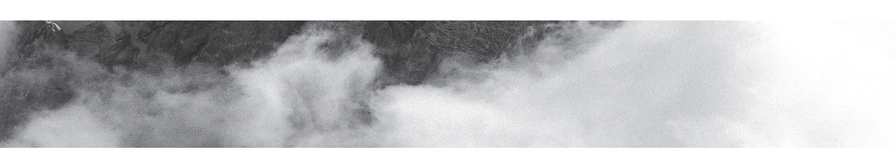

THE FOLLOWING GUIDELINES APPLY

Our general assembly instructions must be adhered to and can be viewed online at **http://www.k2-systems.com/en/downloads/product-information.html**
Call +49 7159 42059-0 for customer log in details.

Roof and ground mounting requirements

- Ensure the roof covering on the support or substructure has sufficient holding strength.
- Roof pitches of up to 5° are permitted on flat roofs. Mechanical fastening is required when roof inclination exceeds 3°.

Important mounting instructions!

- On-site general standards and regulations for lightning protection must be observed and consultation with a specialist to create a lightning protection concept is recommended (use lightning protection clamp if necessary).
- We recommend a thermal separation after maximum of 24.4 m.
- Do not use middle and end clamp sets at rail joints.
- Ensure minimum spacing of 20 mm between rail end and end clamp.
- Tightening torque for all module clamps is 14 Nm.
- Follow manufacturer's instructions for clamping area module installation (see manufacturer module data sheet).
- Roof surface must be clean and dry. Roof irregularities must be corrected or removed where appropriate.
- A minimum distance of 500 mm from roof edges and other impediments (eg light domes, vents, ect.) must be maintained.

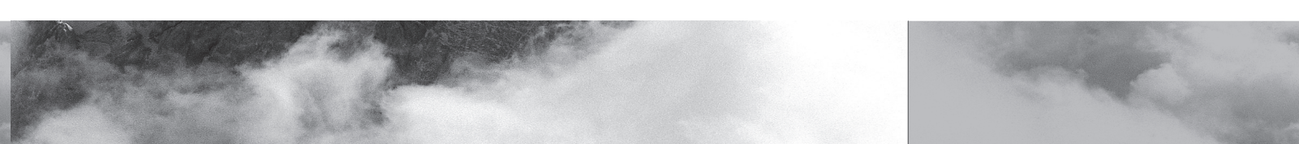

AT A GLANCE: RECOMMENDED TOOLS

K2 Mounting Systems are optimised for effortless assembly. The recommended tools are not included in the scope of supply.



Cordless Screwdriver

wrench size 6 mm

Torque Wrench

wrench size 6 mm



Chalk Line



Tape Measure

MULTIANGLE SYSTEM

45°/30°

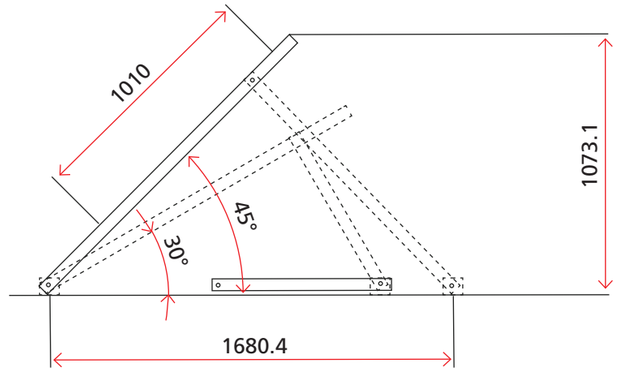

Cutting the Struts

For an individual installation angle, cut the respective strut according to the following table. Always cut from the side where the hole is 18 mm from the edge. After cutting, drill a new central hole allowing a distance of 18 mm.

Profile ≤ 30°

Elevation Angle	Profile [mm]	Elevation Angle	Profile [mm]
10°	253	21°	500
11°	274	22°	524
12°	296	23°	548
13°	318	24°	573
14°	340	25°	598
15°	362	26°	623
16°	384	27°	649
17°	407	28°	675
18°	430	29°	702
19°	453	30°	730
20°	476		

Profile ≤ 45°

Elevation Angle	Profile [mm]	Elevation Angle	Profile [mm]
31°	757	42°	1 113
32°	786	43°	1 152
33°	815	44°	1 191
34°	845	45°	1 232
35°	876		
36°	907		
37°	939		
38°	972		
39°	1 006		
40°	1 041		
41°	1 076		

P/L PORTRAIT/ LANDSCAPE

1 Parts from Accessoires (2002082)

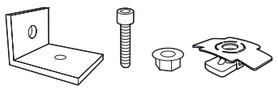

L-bracket (Aluminium)
Allen bolt M8x25 (stainless steel)
Collar nut M8 (stainless steel)
MK2 slot nut (stainless steel)

2 2002056/2002055

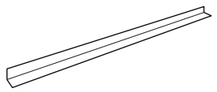

Strut 30° and 45° (Aluminium)

3 2002054

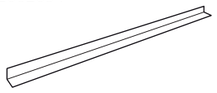

Upper profile (Aluminium)

4 Project specific item number

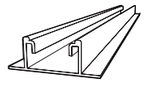

SpeedRail 22 (Aluminium)

5 Parts from Accessoires (2002082)

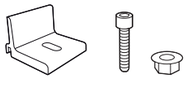

Climber 36/48
(Aluminium)
Allen bolt M8x25 (stainless steel)
Serrated nut M8 (stainless steel)

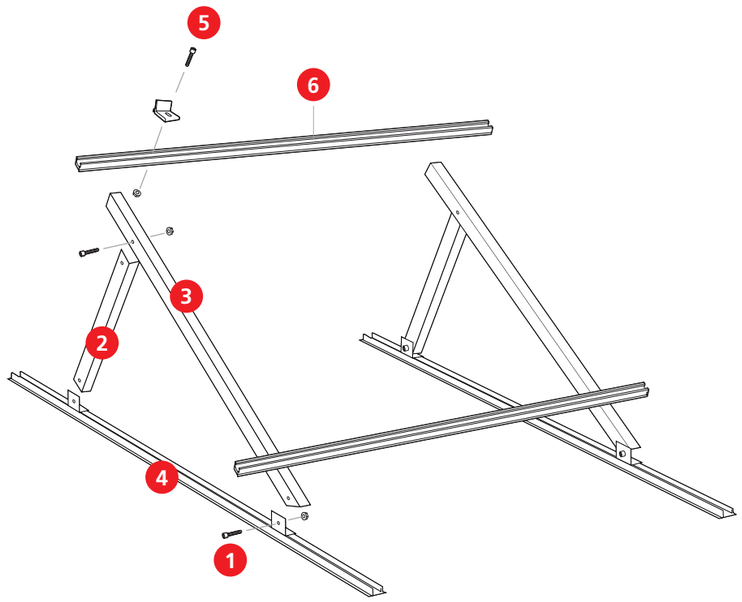

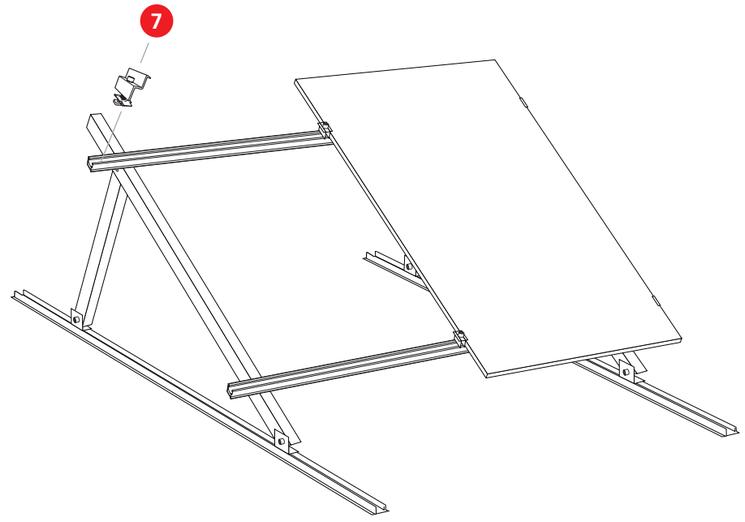

6 Project specific item number

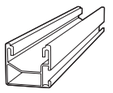

SingleRail 36
(Aluminium)

7 Project specific item number

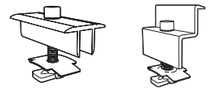

Middle clamp XS Set
(Aluminium)
End clamp Set
(Aluminium)

MULTIANGLE SYSTEM GENERAL ASSEMBLY INSTRUCTIONS FOR PORTRAIT AND LANDSCAPE INSTALLATION

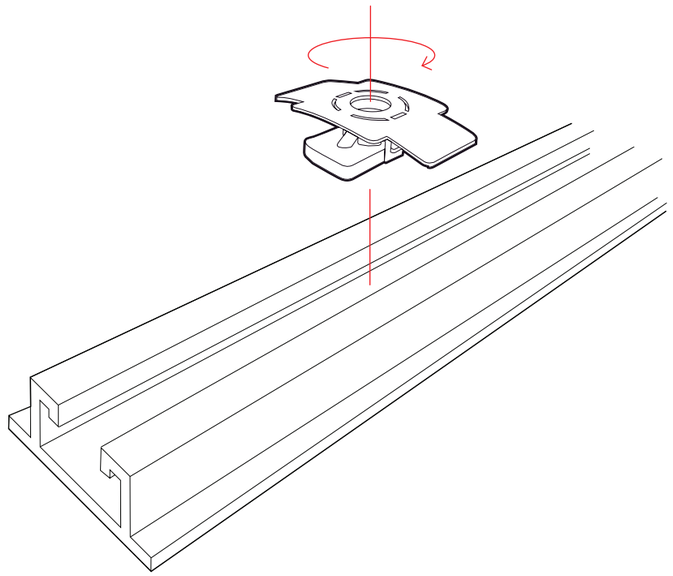

1 of 6 MOUNTING L-BRACKET

- **A** Position SpeedRail
- **B** Insert 2 MK2 slot nuts in the rail and rotate clockwise 90°to lock into place.
- **!** Depending on the angle of inclination, fasten two L-brackets on the Speed Rail in the MK2 slot nuts with an allen bolt leaving appropriate spacing.

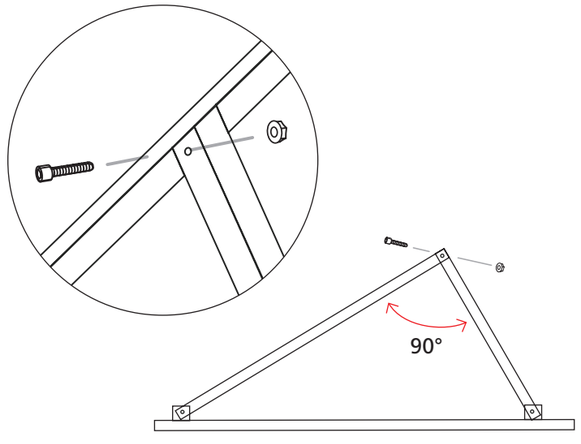

2 of 6 MOUNTING UPPER PROFILE AND STRUT

- **A** Where applicable align customised strut (see page 5) and upper profile in a 90 ° angle and connect with an allen bolt and serrated nut.
- **B** Fasten to the L-brackets with an allen bolt and serrated nut.
- **!** Tightening torque: 16 Nm

MULTIANGLE SYSTEM ASSEMBLY

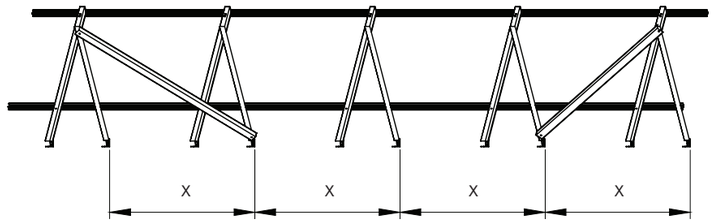

3 of 6 DISTANCE BETWEEN TRIANGLES

- **!** Depending on the wind and snow load, measure the distance (x) between the triangles according to the following table.

Wind and snow load table

Module orientation	Wind load [KN/m²]	Snow load [KN/m²]	Elevation angle [°]	Maximum distance between triangles [m]
Portrait	1.0	1.0	10/15/20/25/30	1.30
			35	1.40
			40	1.50
Portrait	1.6	1.6	10/15/20/25/30	1.05
			35	1.10
			40	1.20
Portrait	2.0	2.0	10/15/20/25	0.90
			30	0.95
			35	1.00
			40	1.05
Landscape	1.0	1.0	10/15/20/25/30	1.65
			35	1.75
			40	1.90
Landscape	1.6	1.6	10/15/20/25/30	1.30
			35	1.40
			40	1.50
Landscape	2.0	2.0	10/15/20/25	1.15
			30	1.20
			35	1.25
			40	135

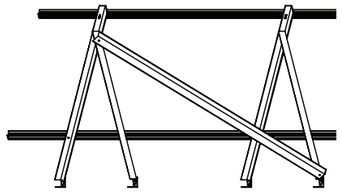

Depending on the inclination angle and spacing between the triangles, diagonally fasten each wind bracing with a self-tapping screw between two triangles.

Wind bracing table

Triangles per row	2 to 5	6 to 8	10 to12	13 to 16	17 to 20	21 to 24
Wind bracing quantity	2	4	6	8	10	12

If elevation angle exceeds 15 °, connect the triangles with L-profiles as wind bracing. The wind bracing length is calculated as follows:

Wind bracing length=$\sqrt{\text{Triangle distance}^2 + \text{length of strut}^2}$

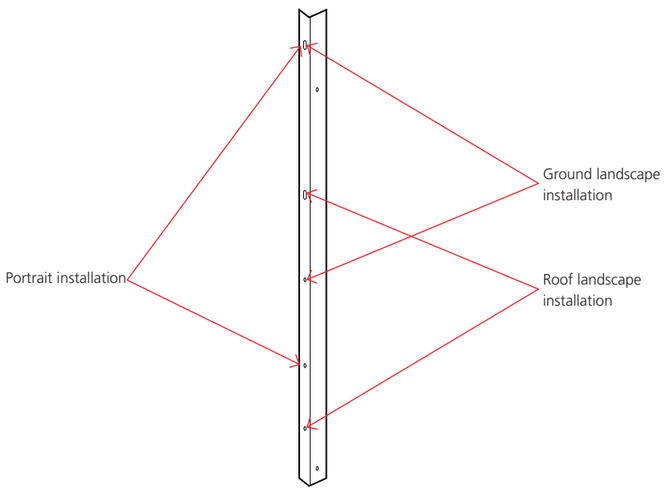

4 of 6

WIND BRACING INSTALLATION

- ! Set the wind bracing according to the table depending on the number of triangles per row
- ! 2000002 (1.50 m)
  2000001 (2.0 m)
  1000370 (6.0 m)

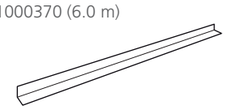

Windbracing (30/30/3; Aluminium)

- ! 1005207 (Edelstahl, EPDM)



Self-tapping screw

5 of 6

FASTEN CLIMBER AND MOUNTING RAILS

- ! Depending on required elevation, use the appropriate long and round holes to installation SingleRails on the upper profile.

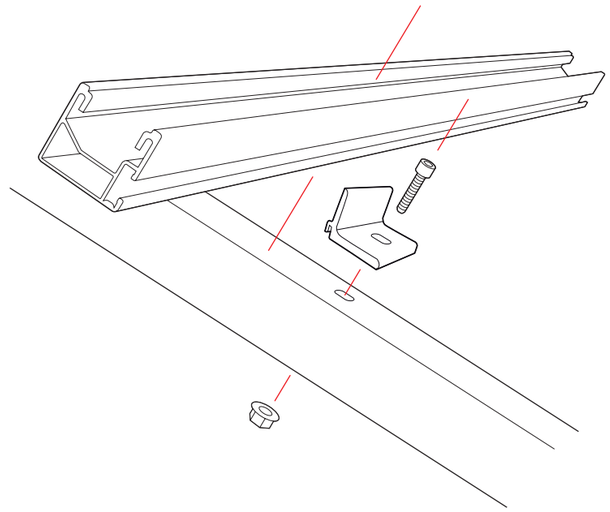

- ! Tightening torque:16 Nm
- A According to the module orientation, hand-tighten the climber to the upper profile using an allen bolt and serrated nut in each slotted hole and bore hole.
- B Insert SingleRail 36, align and screw in and tighten the climber.
- C When appropriate, fix and/ or ballast the triangles on the base rail to the substrate.

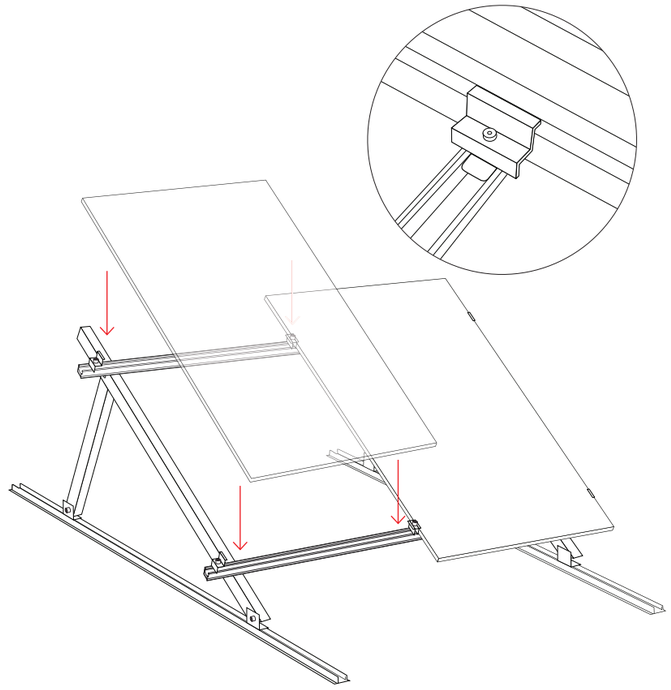

6 of 6

FASTEN MODULE

- A Fix clamps sets onto the SingleRail 36, place in the rail notch and rotate 90°.
- B On the long side of the module (in accordance with the module manufaturer) attach and secure clamps with an allen bolt.
- ! Tightening torque: 14 Nm

MULTIANGLE SYSTEM ASSEMBLY

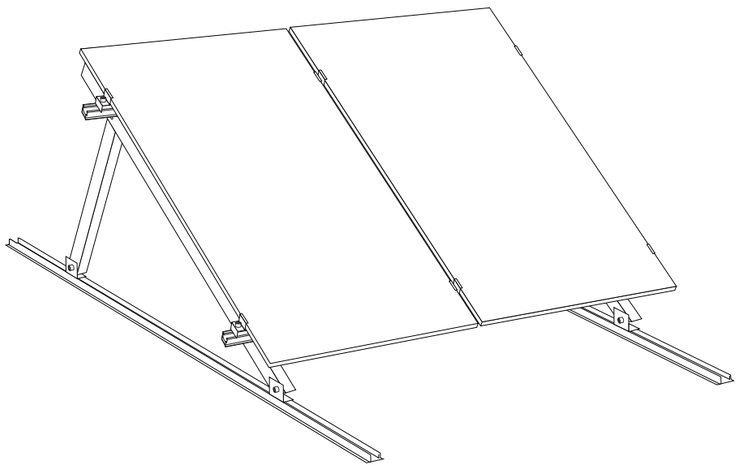

Ready!

LANDSCAPE MOUNTING OPTION

Landscape installation requires corner clamping on the short side of the module. It is therefore essential to clarify in advance whether a module manufacturer approves of clamping on the short side. For an approved module list please contact your account manager or **www.k2-systems.de**. Alternatively, a K2 AddOn mounting adapter allows mounting on the long side of the module. Our service technicians will be happy to advise you.

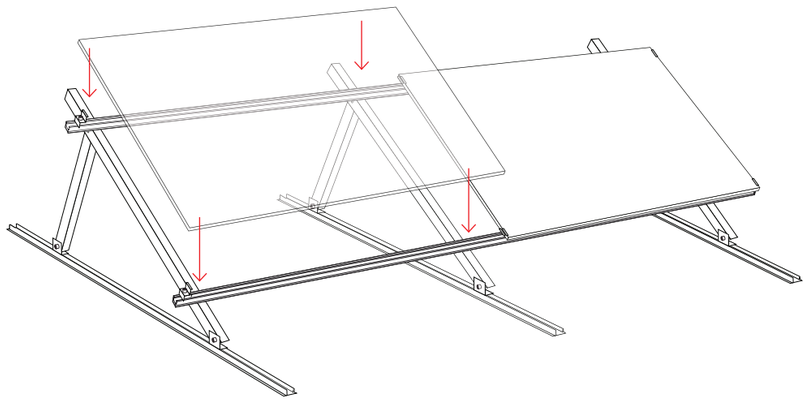

L6 of 6

ALTERNATIVE: LANDSCAPE MOUNTING OPTION

- **A** Insert clamps sets in the Single Rail 36 notches and rotate 90°.
- **B** Attach clamps on the short side of the module and tighten with an allen bolt.
- **!** Tightening torque: 14 Nm

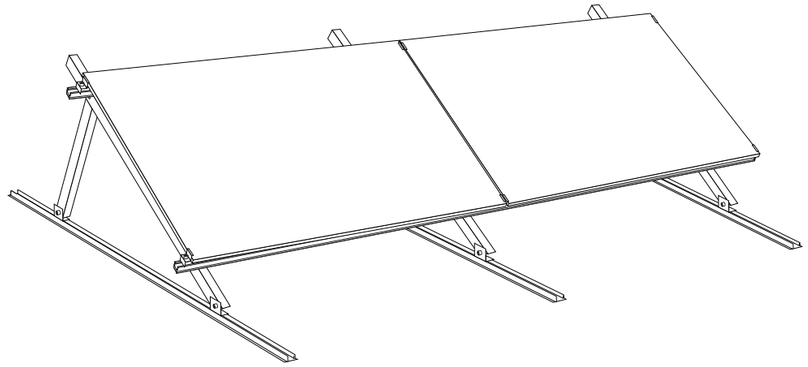

Ready!



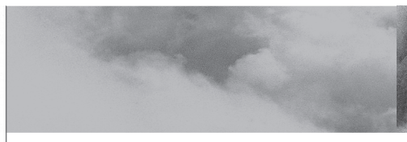

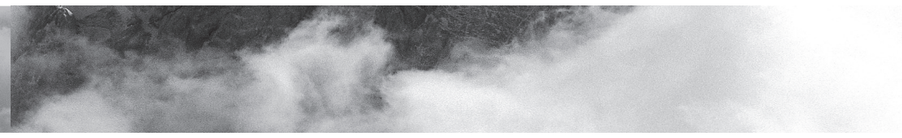



THANK YOU FOR CHOOSING A K2 MOUNTING SYSTEM.

Systems from K2 Systems are quick and easy to install. We hope these instructions have helped. Please contact us if you have any questions or suggestions for improvements.
All contact details can be found at:

http://www.k2-systems.uk.com/contact.html

Service Hotline: +49 (0)7159 42059-0

German law shall apply excluding the UN Convention on CISG. Place of venue is Stuttgart. Our General Terms of Business apply. Please refer to http://www.k2-systems.com/en/gsc.html.

TESTED QUALITY – MULTIPLE CERTIFICATIONS

K2 Systems stands for secure connection, highest quality and precision. Our customers and business partners have known that for a long time. Independent institutes have tested, confirmed and certified our capabilities and components. Please refer to http://www.k2-systems.uk.com/downloads/certificates.html to download our quality and product certificates.