V1.2-2026-04-29

Residential All-In-One Energy Storage System

ESA 5-30kW

GW5.1-BAT-D-G20
GW8.3-BAT-D-G20
GW5.1-BAT-D-G21
GW8.3-BAT-D-G21
GW6.0-BAT-D-G20
GW9.0-BAT-D-G20

Solutions Manual

GOODWE

Copyright Statement

Copyright Statement

Copyright© GoodWe Technologies Co., Ltd. 2026. All rights reserved.

Without the authorization of GoodWe Technologies Co., Ltd., no part of this manual may be reproduced, distributed, or uploaded to third-party platforms such as public networks in any form.

Trademark Authorization

GOODWE and other GOODWE trademarks used in this manual are owned by GoodWe Technologies Co., Ltd. All other trademarks or registered trademarks mentioned in this manual belong to their respective owners.

NOTICE

Due to product version upgrades or other reasons, the content of this document is updated periodically. Unless otherwise agreed, the content of this document cannot replace the safety precautions on the product label. All descriptions in the document are for guidance only.

About This Manual

Overview

This document primarily introduces the product information, installation wiring, configuration and commissioning, troubleshooting, and maintenance content for the energy storage system composed of inverters, Battery system, and smart meters. Please read this manual carefully before installing and using the product to understand the product safety information and familiarize yourself with the product's functions and features. The document may be updated periodically; please obtain the latest version of the materials and more product information from the official website.

Applicable Model

The energy storage system includes the following products:

Product Type	Product Information	Description
Inverter	GW5K-ETA-G20 GW6K-ETA-G20 GW8K-ETA-G20 GW9.999K-ETA-G20 GW10K-ETA-G20 GW12K-ETA-G20 GW15K-ETA-G20 GW20K-ETA-G20 GW25K-ETA-G20 GW29.999K-ETA-G20 GW30K-ETA-G20 GW5K-BTA-G20 GW6K-BTA-G20 GW8K-BTA-G20 GW9.999K-BTA-G20 GW10K-BTA-G20 GW12K-BTA-G20 GW15K-BTA-G20 GW20K-BTA-G20 GW25K-BTA-G20 GW29.999K-BTA-G20 GW30K-BTA-G20	Nominal output power: 5kW-30kW
Battery system	GW5.1-BAT-D-G20 GW5.1-BAT-D-G21	Rated energy 5.12kWh
	GW8.3-BAT-D-G20 GW8.3-BAT-D-G21	Rated energy 8.32kWh
	GW6.0-BAT-D-G20	Rated energy 6kWh

Product Type	Product Information	Description
	GW9.0-BAT-D-G20	Rated energy 9kWh
Meter	GMK330 GM330	Monitoring module in the energy storage system, capable of detecting operational voltage, current, and other information within the system.
smart dongle	WiFi/LAN Kit-20	Uploads system operational information to the monitoring platform via WiFi or LAN signals.
	4G Kit-G20	Uploads system operational information to the monitoring platform via 4G.

Symbol Definition

DANGER
Indicates a highly potential danger that, if not avoided, will result in death or serious injury.
WARNING
Indicates a moderately potential danger that, if not avoided, may result in death or serious injury.
CAUTION
Indicates a low potential danger that, if not avoided, may result in moderate or minor injury.
NOTICE
Emphasizes and supplements the content, and may also provide tips or tricks for optimizing product use, helping you solve a problem or save your time.

Table of Contents

1 Safety Precautions 10
1.1 General Safety 10
1.2 personnel requirements 11
1.3 System Safety 12
1.3.1 PV String Safety 14
1.3.2 Inverter Safety 15
1.3.3 Battery Safety 16
1.3.4 Smart Meter Safety 19
1.4 Safety Symbols and Certification Marks 19
1.5 EU Declaration of Conformity 21
1.5.1 Equipment with Wireless Communication Modules 21
1.5.2 Equipment without Wireless Communication Modules (Except Battery) 21
1.5.3 Battery 22
2 System Introduction 23
2.1 System Overview 23
2.2 Product Overview 39
2.2.1 Residential All-in-One System 39
2.2.2 Smart Meter 46
2.2.3 smart dongle 47
2.3 Supported Grid Types 48
2.4 System Working Mode 48

2.5 Features 58
3 Check and Storage 62
3.1 Check Before Receiving 62
3.2 deliverables 62
3.2.1 Inverter Deliverables 62
3.2.2 Batteries Deliverables 66
3.2.2.1 Expansion Cluster Base Deliverables 67
3.2.2.2 Wall-Mount Bracket Deliverables 69
3.2.3 Smart Meter Deliverables GM330&GMK330 69
3.2.3.1 Accessory List 69
3.3 Storage 70
4 Installation 73
4.1 Installation Requirements 73
4.1.1 Installation Environment Requirements 73
4.1.2 Installation Space Requirements 75
4.1.3 Tool Requirements 77
4.2 Equipment Handling 79
4.3 Installing the Equipment 80
4.4 Installing the Smart Meter 85
5 System Wirings 87
5.1 System Wiring Electrical Block Diagram 88
5.2 Detailed System Wiring Diagram 92

5.2.1 Detailed System Wiring Diagram for Single Inverter 96
5.2.2 Detailed System Wiring Diagram for Parallel System 105
5.3 Preparing Materials 109
5.3.1 Preparing Breakers 110
5.3.2 Preparing Cables 114
5.4 Connecting the PE cable 117
5.5 Connecting the PV Cable 118
5.6 Connecting the Battery Cable 120
5.7 Connecting the AC Cable 122
5.8 Connecting the Meter Cable 124
5.9 Connecting the Inverter Communication Cable 127
6 System Commissioning 132
6.1 Check Before Power ON 132
6.2 Power ON 132
6.3 Installing the Protective Cover 136
6.4 Indicators 136
6.4.1 Inverter Indicators 136
6.4.2 Battery Indicators 139
6.4.3 Smart Meter Indicators GM330&GMK330 140
6.4.3.1 Indicator Description 140
6.4.4 Smart Dongle Indicator 141
7 System Commissioning 143

7.1 Setting Inverter Parameters via App 143
7.1.1 Downloading and Installing SEMS+ App 143
7.2 Monitoring Power Station via SEMS+ WEB 144
8 Maintenance 145
8.1 Power OFF the System 145
8.2 Removing the Equipment 147
8.3 Disposing of the Equipment 148
8.4 Routine Maintenance 148
8.5 fault 151
8.5.1 Viewing Fault/Alarms Information 151
8.5.2 Fault Information and Troubleshooting 152
8.5.2.1 Inverter Fault 153
8.5.2.1.1 Troubleshooting (Fault Code F01-F40) 153
8.5.2.1.2 Troubleshooting (Fault Code F41-F80) 171
8.5.2.1.3 Troubleshooting (Fault Code F81-F121) 180
8.5.2.1.4 Troubleshooting (Fault Code F122-F163) 192
8.5.2.1.5 Troubleshooting Fault Phenomena 201
8.5.2.2 Battery Fault 219
9 technical parameter 240
9.1 Inverter Parameters 240
9.2 Battery Technical Data 293
9.3 Smart Meter Technical Data 297

9.3.1 GM330 297
9.3.2 GMK330 299
9.4 Smart Dongle Technical Data 300
9.4.1 WiFi/LAN Kit-20 300
9.4.2 4G Kit-G20 301
10 Appendix 303
10.1 FAQ 303
10.1.1 How to conduct auxiliary detection for smart meters/CT? 303
10.1.2 How to Upgrade the Device Version 303
10.2 Explanation of Terms 304
10.3 Battery SN Code Meaning 305
11 Contact Information 307

1 Safety Precautions

The safety precautions information contained in this document must always be followed when operating the device.

⚠WARNING

The device has been strictly designed and tested in accordance with safety regulations, but as an electrical device, before performing any operations on the device, relevant safety instructions must be followed. Improper operation may lead to serious injury or property damage.

1.1 General Safety

NOTICE

- Due to product version upgrades or other reasons, the document content will be updated periodically. Unless otherwise agreed, the document content cannot replace the safety precautions on product labels. All descriptions in the document are for guidance only.
- Please read this document carefully before installing the device to understand the product and precautions.
- All operations of the device must be performed by professional and qualified electrical technicians who are familiar with the relevant standards and safety regulations at the project location.
- When operating the device, use insulated tools and wear personal protective equipment to ensure personal safety. When handling electronic components, wear anti-static gloves, anti-static wrist straps, anti-static clothing, etc., to protect the device from electrostatic damage.
- Unauthorized disassembly or modification may cause device damage, and such damage is not covered by the warranty.
- Device damage or personal injury caused by not installing, using, or configuring the device according to the requirements of this document or the corresponding user manual is beyond the manufacturer's liability. For more product warranty information, please obtain it through the official website: https://en.goodwe.com/warrantyrelated.html.

1.2 personnel requirements

NOTICE

To ensure safety, compliance, and efficiency throughout the entire process of equipment transportation, Installation, wiring, operation, and maintenance, operations must be performed by qualified personnel.

1. Qualified personnel include:
   - Personnel who have mastered knowledge of equipment working principles, system structure, risks and hazards, and have received professional operation training or possess extensive practical experience.
   - Personnel who have received relevant technical and safety training, possess certain operational experience, are aware of potential dangers specific tasks may pose to themselves, and can take protective measures to minimize risks to themselves and others.
   - Qualified electrical technicians meeting the regulatory requirements of the country/region.
   - Personnel holding a degree in electrical engineering/an advanced diploma in electrical discipline or equivalent/possessing professional qualifications in the electrical field, with at least 2/3/4 years of experience in testing and supervision work using electrical equipment safety standards.
2. Personnel involved in special tasks such as electrical work, work at heights, and special equipment operation must hold valid qualification certificates as required by the equipment's location.
3. Medium-voltage equipment operation must be performed by certified high-voltage electricians.
4. Equipment and component replacement is only permitted to be performed by authorized personnel.

1.3 System Safety

⚠DANGER

- Before performing electrical connections, disconnect all upstream switches of the device to ensure it is powered off. Working on live circuits is strictly prohibited, as it may lead to hazards such as electric shock.
- To prevent personal injury or equipment damage caused by working on live circuits, a circuit breaker must be added to the voltage input side of the device.
- All operations including transportation, storage, installation, operation, use, and maintenance must comply with applicable laws, regulations, standards, and specifications.
- The specifications of cables and components used for electrical connections must comply with local laws, regulations, standards, and specifications.
- Use the cable connectors provided in the package to connect the device cables. If other models of connectors are used, any resulting equipment damage is not within the manufacturer's liability.
- Ensure all cables of the device are correctly connected, securely fastened, and free from looseness. Improper wiring may cause poor contact or damage the equipment.
- The equipment's protective grounding wire must be firmly connected.
- To protect the equipment and its components from damage during transportation, ensure that transport personnel are professionally trained. Record the operation steps during transportation and keep the equipment balanced to avoid dropping.
- The equipment is heavy. Assign personnel according to the equipment's weight to prevent it from exceeding the human lifting capacity and causing injury from falling.
- Ensure the equipment is placed stably and not tilted. Equipment tipping over may cause equipment damage and personal injury.

⚠WARNING

- During equipment installation, avoid having the terminals bear weight, as this may cause terminal damage.
- If the cable is subjected to excessive tension, it may lead to poor connections. When wiring, leave a certain length of cable slack before connecting it to the equipment's terminal ports.
- Cables of the same type should be bundled together. Different types of cables should be routed at least 30mm apart and must not be intertwined or cross-routed.
- Using cables in high-temperature environments may cause insulation aging and damage. Maintain a distance of at least 30mm between cables and heat-generating components or the periphery of heat source areas.

1.3.1 PV String Safety

⚠WARNING

- Ensure the component frame and mounting system are properly grounded.
- After connecting the DC cables, ensure the cable connections are tight and secure with no looseness. Improper wiring may cause poor contact or high impedance, and damage the inverter.
- Use a multimeter to measure the positive and negative poles of the DC cables to ensure correct polarity, with no reverse connection; and that the voltage is within the permissible range.
- Use a multimeter to measure the DC cables to ensure correct polarity, with no reverse connection; the voltage should be lower than the maximum DC input voltage. Damage caused by reverse connection and overvoltage is not covered by the equipment manufacturer's warranty.
- The PV string output does not support grounding. Before connecting the PV string to the inverter, ensure the minimum insulation resistance to ground of the PV string meets the minimum insulation resistance requirement (R=Max. Input Voltage (V)/30mA).
- Do not connect the same PV string to multiple inverters, as this may damage the inverters.
- The PV modules used with the inverter must comply with IEC 61730 Class A standards.
- When the PV string input voltage or input current is high, it may cause the inverter output power to derate.

1.3.2 Inverter Safety

⚠WARNING

- Ensure the voltage and frequency at the grid connection point comply with the inverter's grid-connection specifications.
- It is recommended to install protective devices such as circuit breakers or fuses on the AC side of the inverter. The rating of the protective device must be greater than 1.25 times the maximum AC output current of the inverter.
- If the inverter triggers an arc fault alarm less than 5 times within 24 hours, the alarm can be cleared automatically. After the 5th arc fault alarm, the inverter will shut down for protection. The inverter can resume normal operation only after the fault is cleared.
- If a battery is not configured in the photovoltaic system, it is not recommended to use the BACK-UP function, as it may cause a system power outage risk.
- Grid voltage and frequency fluctuations may cause the inverter output power to derate.

1.3.3 Battery Safety

⚠DANGER

- Before operating any devices in the system, ensure that the devices are powered off to avoid the risk of electric shock. During device operation, strictly adhere to all safety precautions in this manual and the safety labels on the devices.
- Do not disassemble, modify, or repair the battery without official authorization from the device manufacturer. Otherwise, it may cause electric shock or device damage, and any losses incurred are beyond the manufacturer’s liability.
- Do not impact, pull, drag, squeeze, or step on the device, and do not place the battery in fire, as the battery may explode.
- Do not place the battery in high-temperature environments. Ensure there are no heat sources near the battery and that it is not exposed to direct sunlight. If the ambient temperature exceeds 60°C, it may cause a fire.
- Do not use the battery if it has obvious defects, cracks, damage, or other conditions. Battery damage may lead to electrolyte leakage.
- Do not move the battery system while it is operating. If battery replacement or addition is needed, contact the after-sales service center.
- Battery short circuits may cause personal injury. The instantaneous high current from a short circuit can release a large amount of energy, which may lead to a fire.
- To protect the battery pack and its components from damage during transportation, ensure that transport personnel are professionally trained. Record the operating steps during transportation and keep the device balanced to avoid dropping.
- The battery device is heavy. Assign personnel according to the device's weight to prevent it from exceeding the weight range that can be manually handled, which could cause injury to personnel.

⚠WARNING

- Battery current may be affected by factors such as temperature, Humidity, weather conditions, etc., which may cause current limiting and affect load capacity.
- If the battery cannot start, contact the after-sales service center as soon as possible. Otherwise, the battery may be permanently damaged.
- Regularly inspect and maintain the battery according to its maintenance requirements.
- Ensure that the battery system is not damaged during transportation and storage. Ensure that the device is placed stably and not tilted, as tipping may cause device damage and personal injury.

Emergency Response Measures

- Battery electrolyte leakage
  If a battery module leaks electrolyte, avoid contact with the leaking liquid or gas. Electrolyte is corrosive and contact may cause skin irritation and chemical burns. If accidental contact with the leaked substance occurs, take the following actions:
  - inhalation: Evacuate from the contaminated area and seek medical help immediately.
  - Eye contact: Rinse with clean water for at least 15 minutes and seek medical help immediately.
  - Skin contact: Wash the affected area thoroughly with soap and water and seek medical help immediately.
  - Ingestion: Induce vomiting and seek medical assistance immediately.
- Fire
  - When the battery temperature exceeds 150°C, there is a risk of fire. A battery fire may release toxic and harmful gases.
  - To prevent fire, ensure carbon dioxide or water fire extinguishing equipment is available near the device.
  - When extinguishing a fire, do not use ABC dry powder fire extinguishers. Firefighters must wear protective clothing and self-contained breathing apparatus.
- Battery triggers fire protection
  For batteries equipped with optional fire protection functionality, after the fire protection function is triggered, perform the following actions:
  - Immediately cut off the main power switch to ensure no current flows through the battery system.

- Conduct a preliminary visual inspection of the battery for any damage, deformation, leakage, or unusual odor. Check the battery casing, connectors, and cables.
- Use a temperature sensor to detect the battery and its ambient temperature to ensure there is no risk of overheating.
- Isolate and label the damaged battery, and dispose of it properly according to local regulations.

1.3.4 Smart Meter Safety

⚠WARNING

If the grid voltage fluctuation exceeds 265V, long-term overvoltage operation may cause damage to the meter. It is recommended to add a fuse with a rated current of 0.5A on the voltage input side of the meter to protect it.

1.4 Safety Symbols and Certification Marks

⚠DANGER

- After equipment installation, labels and warning signs on the enclosure must remain clearly visible. Do not cover, alter, or damage them.
- The following enclosure warning label descriptions are for reference only. Please refer to the actual labels used on the equipment.

No.	Symbol	Meaning
1		Potential hazard exists during equipment operation. Please take protective measures when operating the equipment.
2		High voltage hazard. High voltage is present during equipment operation. Please ensure the equipment is powered off before performing any operations.

No.	Symbol	Meaning
3		The inverter surface is at high temperature. Do not touch during operation to avoid burns.
4		Use the equipment properly. There is a risk of explosion under extreme conditions.
5		Battery contains flammable materials. Beware of fire.
6		The equipment contains corrosive electrolyte. Avoid contact with leaked electrolyte or volatile gases.
7		Delayed discharge. After powering off the equipment, please wait 5 minutes for it to discharge completely.
8		Keep the equipment away from open flames or ignition sources.
9		Keep the equipment out of reach of children.
10		Do not extinguish with water.
11		Please read the product manual carefully before operating the equipment.
12		Personal protective equipment must be worn during installation, operation, and maintenance.

No.	Symbol	Meaning
13	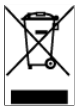	This equipment must not be disposed of as household waste. Please dispose of it according to local laws and regulations, or return it to the manufacturer.
14		Grounding point.
15		Recycling symbol.
16		CE certification mark.
17		TUV mark.
18		RCM mark.

1.5 EU Declaration of Conformity

1.5.1 Equipment with Wireless Communication Modules

Equipment with wireless communication modules sold in the European market must comply with the following directives:

- Radio Equipment Directive 2014/53/EU (RED)
- Restrictions of Hazardous Substances Directive 2011/65/EU and (EU) 2015/863 (RoHS)
- Waste Electrical and Electronic Equipment 2012/19/EU
- Registration, Evaluation, Authorization and Restriction of Chemicals (EC) No 1907/2006 (REACH)

1.5.2 Equipment without Wireless Communication Modules (Except Battery)

Equipment without wireless communication modules that can be sold in the European market meets the requirements of the following directives:

- Electromagnetic compatibility Directive 2014/30/EU (EMC)
- Electrical Apparatus Low Voltage Directive 2014/35/EU (LVD)
- Restrictions of Hazardous Substances Directive 2011/65/EU and (EU) 2015/863 (RoHS)
- Waste Electrical and Electronic Equipment 2012/19/EU
- Registration, Evaluation, Authorization and Restriction of Chemicals (EC) No 1907/2006 (REACH)

1.5.3 Battery

The Battery sold in the European market complies with the following directives:

- Electromagnetic compatibility Directive 2014/30/EU (EMC)
- Electrical Apparatus Low Voltage Directive 2014/35/EU (LVD)
- Restrictions of Hazardous Substances Directive 2011/65/EU and (EU) 2015/863 (RoHS)*1
- Regulation (EU) 2023/1542 Article 12 - Safety of stationary battery energy storage systems
- Regulation (EU) 2023/1542 Article 10 - Performance and durability requirements for rechargeable industrial batteries, LMT batteries and electric vehicle batteries
- Regulation (EU) 2023/1542 Article 14 - Information on the state of health and expected lifetime of batteries
- Waste Electrical and Electronic Equipment 2012/19/EU
- Registration, Evaluation, Authorization and Restriction of Chemicals (EC) No 1907/2006 (REACH)
  Our Battery products comply with the hazardous substance restriction requirements stipulated by this act.

More EUDeclaration of Conformity can be obtained fromOfficial WebsiteAcquisition.

2 System Introduction

2.1 System Overview

The Household Storage Integrated Unit solution integrates devices such as inverters, batteries, smart meters, and smart communication sticks. In a photovoltaic system, it converts solar energy into electricity to meet household power demands. The energy IoT devices in the system control power-consuming devices by identifying the overall power situation in the system, thereby achieving intelligent management of power for load usage, storage to batteries, or output to the grid, etc.

⚠WARNING

- The energy storage system is not suitable for connecting to devices that rely on stable power supply, such as life-sustaining medical equipment. Please ensure that system power failure will not cause personal injury.
- If the residential storage all-in-one unit is in a high-temperature environment or under BMS current limiting conditions, it may cause the battery charging power to be limited, leading to excessively high system voltage triggering overvoltage protection.
- The inverter only supports GoodWe brand batteries specified in this manual. If no battery is connected, it can only operate in grid-tied mode and must be installed on the base provided with the package.
- In microgrid scenarios, it is recommended that the PV open-circuit voltage of the residential storage all-in-one unit be < 0.85 * PV maximum input voltage to avoid system overvoltage triggering overvoltage protection under harsh operating conditions.
- In microgrid scenarios, please ensure the over-frequency power reduction point of the grid-tied inverter matches that of the residential storage all-in-one unit.
- If output power limiting is required for the grid-tied inverter, please connect a separate meter or CT device.
- Please ensure the over-frequency power reduction curve of the grid-tied inverter is set as follows:
  - Set the endpoint power to 0% Pn
  - Set the response delay time to 0, and disable the hysteresis function
- In a system where the inverter operates completely off-grid, if the battery

⚠WARNING

experiences prolonged periods of low sunlight or rainy weather without timely recharging, it may lead to over-discharge, causing battery performance degradation or damage. To ensure long-term stable system operation, avoid completely draining the battery. Recommended measures are as follows:
  - When operating off-grid, set a minimum SOC protection threshold. It is recommended to set the off-grid battery SOC lower limit to 30%.
  - When the SOC approaches the protection threshold, the system will automatically enter load limiting or protection mode.
  - If there are multiple consecutive days of insufficient sunlight and the battery SOC is too low, promptly replenish the battery using an external energy source (such as a generator or grid-assisted charging).
  - Regularly check the battery status to ensure it remains within a safe operating range.
  - It is recommended to perform a full charge and discharge cycle on the battery every six months to calibrate SOC accuracy.
- Due to product version upgrades or other reasons, document content is updated periodically. For the compatibility relationship between inverters and IoT products, please refer to: https://en.goodwe.com/Ftp/EN/Downloads/User%20Manual/GW_Compatibility-list-of-GoodWe-inverters-and-IoT-products-EN.pdf
- For detailed networking and wiring schemes for each scenario, please refer to: 5.2.Detailed System Wiring Diagram(Page 92).

When the energy storage system is in off-grid state, it can normally supply the following loads:

BACK-UP Port Off-Grid Load Capacity Specification				
Inverter Model	GW5K-ETA-G20 GW6K-ETA-G20 GW8K-ETA-G20 GW9.999K-ETA-G20 GW10K-ETA-G20 GW12K-ETA-G20 GW15K-ETA-G20 GW20K-ETA-G20 GW5K-BTA-G20 GW6K-BTA-G20 GW8K-BTA-G20 GW9.999K-BTA-G20 GW10K-BTA-G20 GW12K-BTA-G20 GW15K-BTA-G20 GW20K-BTA-G20		GW25K-ETA-G20 GW29.999K-ETA-G20 GW30K-ETA-G20 GW25K-BTA-G20 GW29.999K-BTA-G20 GW30K-BTA-G20	
Load Type	Single-Phase	Three-Phase	Single-Phase	Three-Phase
Single Inductive Load Rated Power (kVA)	1.1	3.3	2.2	6.6
Total Rated Power of Multiple Inductive Loads (kVA)	0.4*Pn/3	0.4*Pn	0.4*Pn/3	0.4*Pn
Capacitive Load (kVA)	0.33*Pn/3	0.33*Pn	0.33*Pn/3	0.33*Pn
Half-Wave Load (kW)	2	-	3	-

BACK-UP Port Off-Grid Load Capacity Specification
Note: • Pn: Inverter rated output power. • Half-wave load: Some old or non-EMC compliant household appliances (e.g., hair dryers, small heaters using half-wave rectification). • If the total power of multiple inductive loads calculated based on the rated power is less than the rated power of a single inductive load, then Total Rated Power of Multiple Inductive Loads = Single Inductive Load Rated Power. • If inductive loads are to be used, it is recommended to use them with a frequency converter. • For 2 or more units in parallel, the allowed total inductive load rated power = Single Inductive Load Rated Power * Number of Parallel Units * 80%.

General Scenario

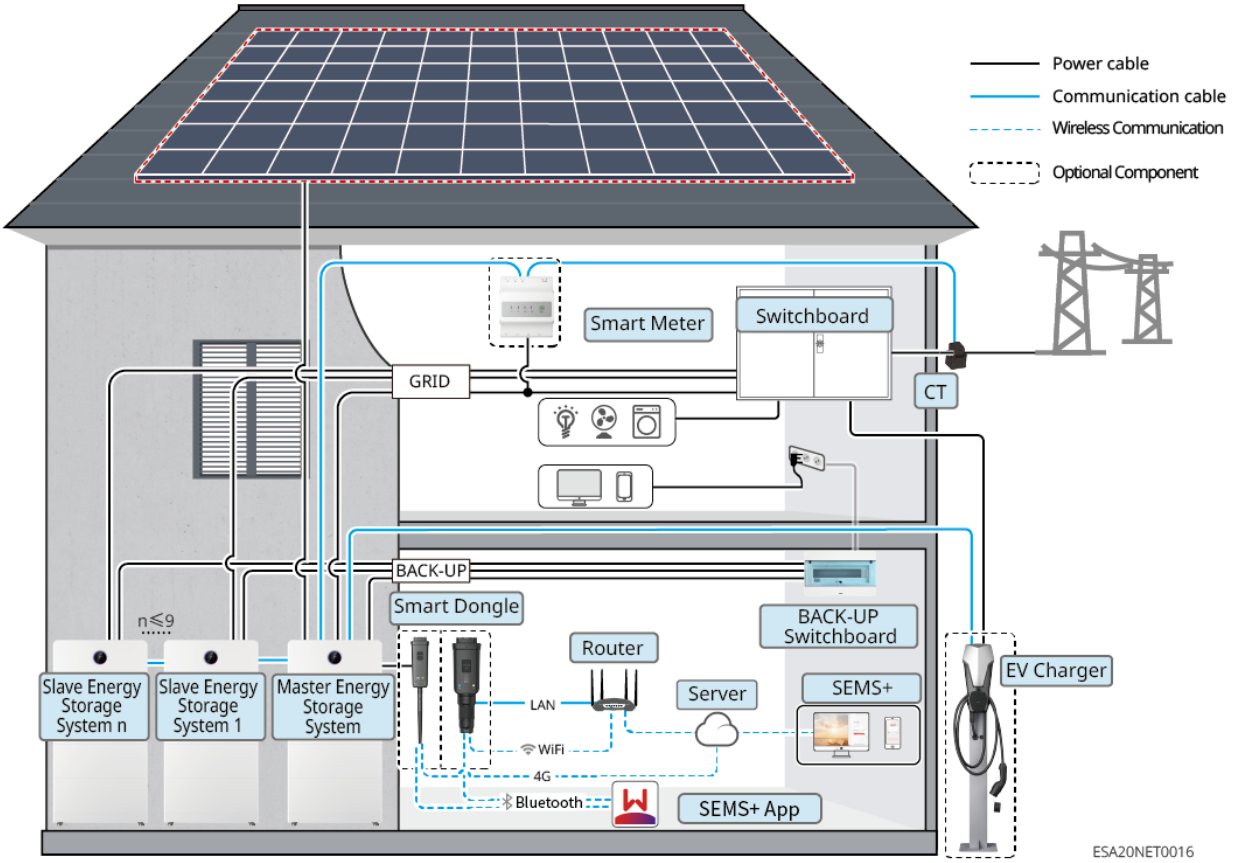

Device Type	model	Description
hybrid inverter	GW5K-ETA-G20 GW6K-ETA-G20 GW8K-ETA-G20 GW9.999K-ETA-G20 GW10K-ETA-G20 GW12K-ETA-G20 GW15K-ETA-G20 GW20K-ETA-G20 GW25K-ETA-G20 GW29.999K-ETA-G20 GW30K-ETA-G20 GW5K-BTA-G20 GW6K-BTA-G20 GW8K-BTA-G20 GW9.999K-BTA-G20 GW10K-BTA-G20 GW12K-BTA-G20 GW15K-BTA-G20 GW20K-BTA-G20 GW25K-BTA-G20 GW29.999K-BTA-G20 GW30K-BTA-G20	• Connection to GoodWe AC charging piles is only supported in single-unit scenarios. • The system supports a maximum of 10 inverters to form a parallel system, supporting hybrid on-grid/off-grid parallel connection of inverters with different power ratings. When mixing, it is recommended to use a high-power inverter as the master unit. Microgrid functionality is not supported in parallel systems. • Supports generator control and generator charging of the battery. If connecting a generator, please use the GMK330 or GM330 Smart Meter. • In a parallel system, each inverter requires the installation of a WiFi/LAN Kit-20. • The following version requirements must be met for system networking: ◦ Inverter ARM software version must be 03.138 or higher. ◦ Inverter DSP software version must be 01.1025 or higher.

Device Type	model	Description
Battery system	GW5.1-BAT-D-G20 GW5.1-BAT-D-G21 GW8.3-BAT-D-G20 GW8.3-BAT-D-G21 GW6.0-BAT-D-G20 GW9.0-BAT-D-G20	• Different models of battery modules can be mixed. • The system supports 5-108kWh, meeting various power and energy matching requirements. • Battery heating film is optional. The "Battery Heating" function can only be enabled on models configured with the heating film. Batteries without the heating film should not be used in low-temperature environments, as this may prevent the device from operating. • The battery heating function is unavailable when GW5.1-BAT-D-G20, GW8.3-BAT-D-G20, GW5.1-BAT-D-G21, GW8.3-BAT-D-G21, GW6.0-BAT-D-G20, GW9.0-BAT-D-G20 are mixed. • If the system requires mixed battery use or split-type capacity expansion, ensure the BMS software version is V06 or higher and the DCDC version is V05 or higher.
Smart Meter	Inverter Built-in Meter	
	GMK330 (purchased from GoodWe)	

Device Type	model	Description
	GM330 (purchased from GoodWe)	• Built-in Meter: Please use the CT shipped with the inverter for connection. ◦ CT ratio is 120A:40mA. ◦ If the inverter's built-in meter is insufficient, contact your dealer to purchase a GMK330 or GM330 Smart Meter. • GMK330: CT cannot be replaced; CT ratio is 120A:40mA • GM330: CT can be purchased from GoodWe or separately; CT ratio requirement: nA/5A ◦ nA: CT primary side input current, where n ranges from 200 to 5000 ◦ 5A: CT secondary side output current • If the number of parallel inverters exceeds 2, or if the wire gauge or range of the standard CT does not meet the total current requirement of the on-site parallel system, please use the GM330 Smart Meter.
Smart dongle	WiFi/LAN Kit-20	• Suitable for single inverter and parallel inverter system networking scenarios. • Uses Bluetooth signal for local configuration of device parameters and viewing device operation information; uploads system operation information to the monitoring platform via WiFi or LAN. • Please ensure the Smart dongle firmware version is 07 or higher.

Device Type	model	Description
	4G Kit-G20	• Suitable for single inverter system networking scenarios. • Uses Bluetooth signal for local configuration of device parameters and viewing device operation information; uploads system operation information to the monitoring platform via 4G.

Microgrid Scenario

When the grid-tied inverter is connected to the hybrid inverter's BACK-UP port, it is a microgrid scenario.

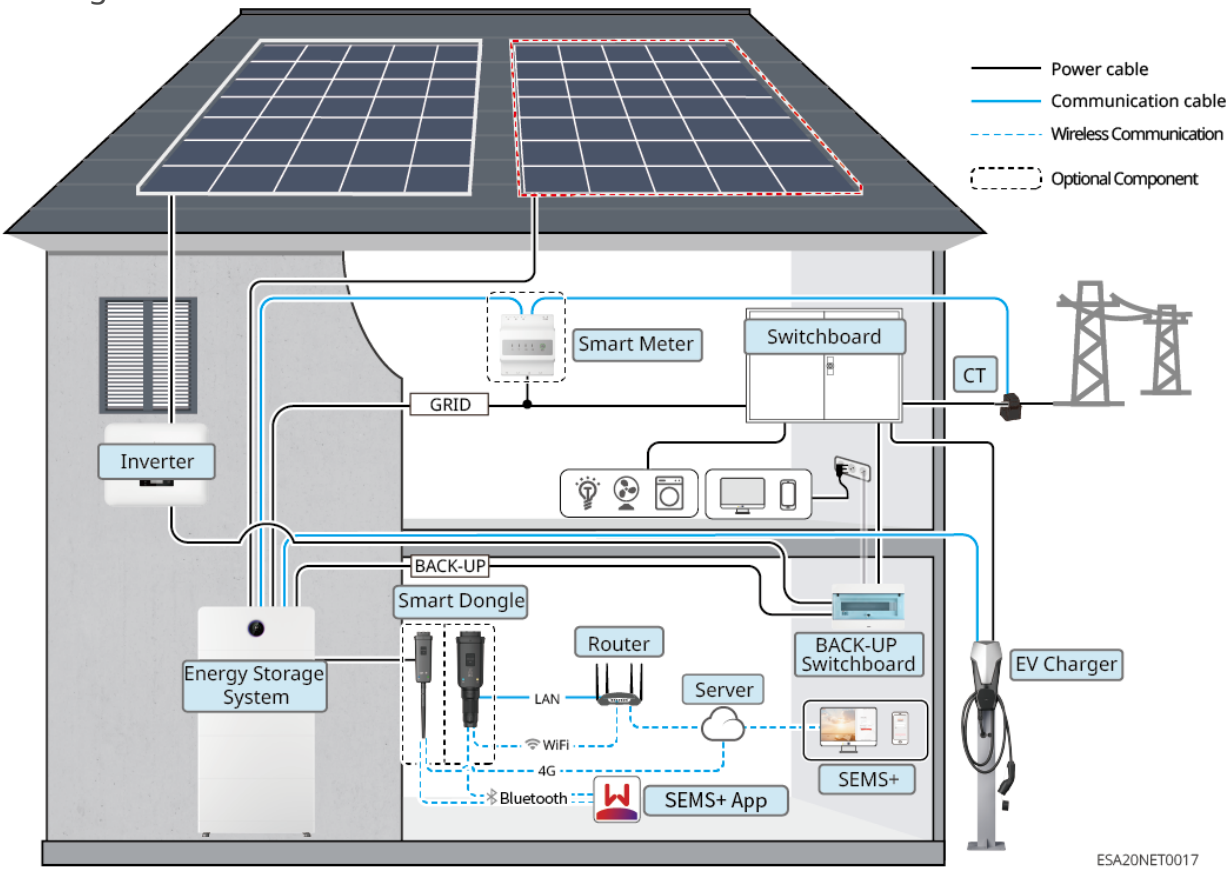

Device Type	model	Description
hybrid inverter	GW5K-ETA-G20 GW6K-ETA-G20 GW8K-ETA-G20 GW9.999K-ETA-G20 GW10K-ETA-G20 GW12K-ETA-G20 GW15K-ETA-G20 GW20K-ETA-G20 GW25K-ETA-G20 GW29.999K-ETA-G20 GW30K-ETA-G20 GW5K-BTA-G20 GW6K-BTA-G20 GW8K-BTA-G20 GW9.999K-BTA-G20 GW10K-BTA-G20 GW12K-BTA-G20 GW15K-BTA-G20 GW20K-BTA-G20 GW25K-BTA-G20 GW29.999K-BTA-G20 GW30K-BTA-G20	• In a microgrid scenario, only one hybrid inverter is supported in the system. • In a microgrid scenario, connecting a generator is not supported.

Device Type	model	Description
Battery system	GW5.1-BAT-D-G20 GW5.1-BAT-D-G21 GW8.3-BAT-D-G20 GW8.3-BAT-D-G21 GW6.0-BAT-D-G20 GW9.0-BAT-D-G20	• Different models of battery modules can be mixed and used. • The system supports 5-108kWh, meeting usage with different power and energy matching requirements. • The battery heating film is optional. The "Battery Heating" function can only be enabled for models configured with the heating film. Batteries without the heating film should not be used in low-temperature environments, as this may prevent the device from operating. • When GW5.1-BAT-D-G20, GW8.3-BAT-D-G20, GW5.1-BAT-D-G21, GW8.3-BAT-D-G21, GW6.0-BAT-D-G20 , GW9.0-BAT-D-G20 are mixed, the battery heating function is unavailable. • If the system requires mixed battery use or split-type expansion, ensure the BMS software version is V06 or above and the DCDC version is V05 or above.
Smart Meter	Inverter Built-in Meter	• Built-in Meter: Please use the CT shipped with the inverter to connect to the inverter. ◦ CT ratio is 120A:40mA ◦ If the inverter's built-in meter is insufficient, contact your dealer to purchase a GMK330 or GM330 Smart Meter. • GMK330: CT cannot be replaced; CT ratio is 120A:40mA • GM330: CT can be purchased from GoodWe or separately; CT ratio is nA:5A
	GMK330 (Purchase from GoodWe)	
	GM330 (Purchase from GoodWe)	

Device Type	model	Description
Smart dongle	WiFi/LAN Kit-20	• Uses Bluetooth signal for local configuration of device parameters and viewing device operation information; uploads system operation information to the monitoring platform via WiFi or LAN. • Ensure the Smart dongle's firmware version is 07 or above.
	4G Kit-G20	• Uses Bluetooth signal for local configuration of device parameters and viewing device operation information; uploads system operation information to the monitoring platform via 4G.

Device Type	model	Description
grid-tied PV inverter	-	• GoodWe brand grid-tied PV inverters are recommended; third-party grid-tied PV inverters are supported. • In a microgrid scenario, ensure the grid-tied PV inverter's rated output power ≤ the hybrid inverter's rated output power. • When the microgrid system is in grid-connected state, if power limitation is required, ensure: ◦ For the hybrid inverter, set it in the Grid Power Limit interface of the SEMS+ App. For the grid-tied PV inverter, set it according to the actual tool used. ◦ To ensure the grid-tied PV inverter can continue generating power, adjust the hybrid inverter's output power in the Microgrid Mode interface of the SEMS+ App. Note: Different grid-tied PV inverters have different output power control precision. Set the grid power limit parameter value according to the actual situation.

Coupling Scenario

When the grid-tied inverter is connected to the hybrid inverter's GRID port, it is a coupling scenario.

Coupling Scenario

When the grid-tied inverter is connected to the hybrid inverter's GRID port, it is a coupling scenario.

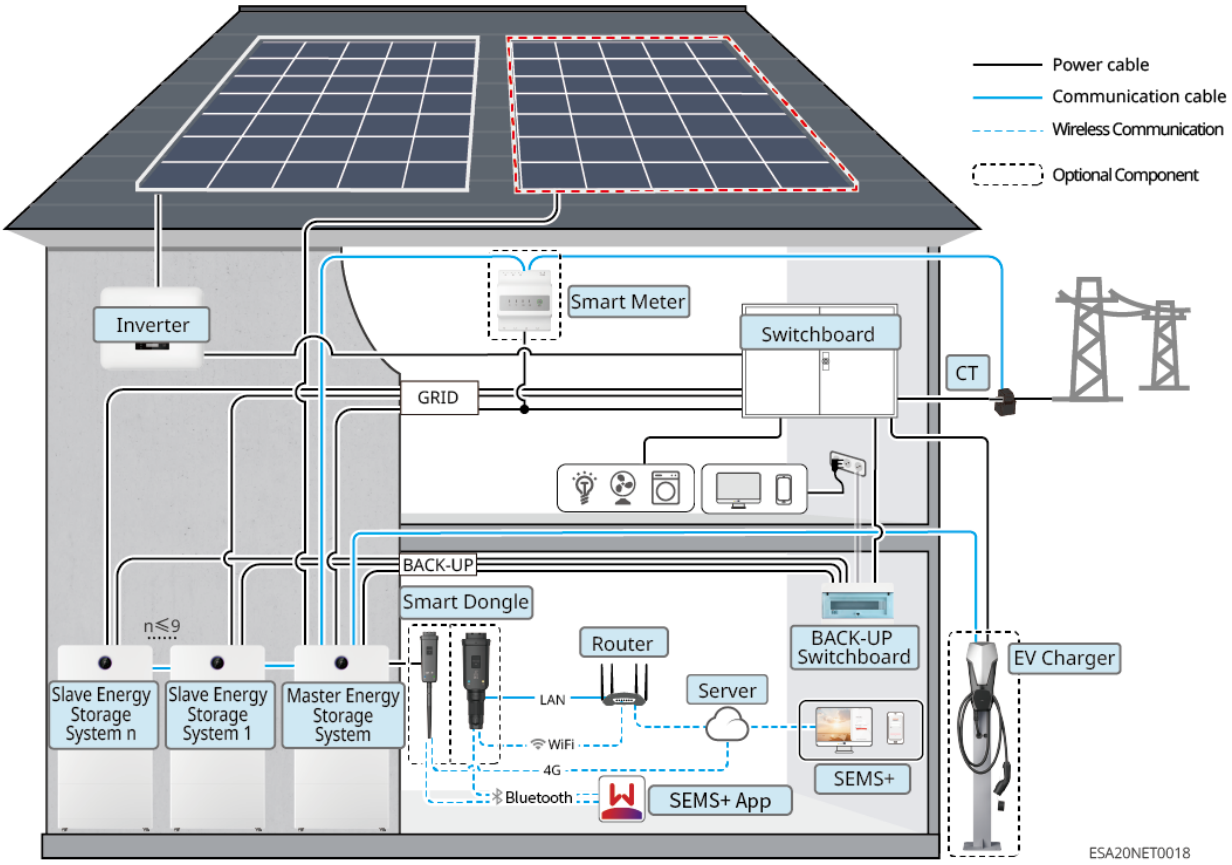

Device Type	model	Description
hybrid inverter	GW5K-ETA-G20 GW6K-ETA-G20 GW8K-ETA-G20 GW9.999K-ETA-G20 GW10K-ETA-G20 GW12K-ETA-G20 GW15K-ETA-G20 GW20K-ETA-G20 GW25K-ETA-G20 GW29.999K-ETA-G20 GW30K-ETA-G20 GW5K-BTA-G20 GW6K-BTA-G20 GW8K-BTA-G20 GW9.999K-BTA-G20 GW10K-BTA-G20 GW12K-BTA-G20 GW15K-BTA-G20 GW20K-BTA-G20 GW25K-BTA-G20 GW29.999K-BTA-G20 GW30K-BTA-G20	• Only supports connection to GoodWe AC charging piles in single-unit scenarios. • The system supports up to 10 inverters to form a parallel system, and supports hybrid parallel connection of inverters with different power ratings in on-grid/off-grid modes. When mixing, it is recommended to use a high-power inverter as the master; the microgrid function is not supported during parallel operation. • Supports generator control and generator charging of the battery. If a generator needs to be connected, please use the GMK330 or GM330 Smart Meter. • In a parallel system, each inverter needs to be installed with a WiFi/LAN Kit-20. • The following version requirements must be met during system networking: ◦ The Inverter ARM software version is 03.138 or higher. ◦ The Inverter DSP software version is 01.1025 or higher.

Device Type	model	Description
Battery system	GW5.1-BAT-D-G20 GW5.1-BAT-D-G21 GW8.3-BAT-D-G20 GW8.3-BAT-D-G21 GW6.0-BAT-D-G20 GW9.0-BAT-D-G20	• Different models of battery modules can be mixed. • The system supports 5-108kWh, meeting usage with different power and energy matching requirements. • The battery heating pad is optional. The "Battery Heating" function can only be enabled on models configured with the heating pad. Batteries without the heating pad should not be used in low-temperature environments, as this may cause the device to fail to operate. • The battery heating function is unavailable when GW5.1-BAT-D-G20, GW8.3-BAT-D-G20, GW5.1-BAT-D-G21, GW8.3-BAT-D-G21, GW6.0-BAT-D-G20 , GW9.0-BAT-D-G20 are mixed. • If the system requires mixed battery use or split-type expansion, ensure the BMS software version is V06 or higher and the DCDC version is V05 or higher.
Smart Meter	Inverter Built-in Meter	
	GMK330 (Purchase from GoodWe)	

Device Type	model	Description
	GM330 (Purchase from GoodWe)	• Built-in Meter: Please use the CT shipped with the unit to connect to the inverter. ◦ The CT ratio is 120A:40mA. ◦ If the inverter's built-in meter does not meet the usage requirements, contact the dealer or others to purchase a GMK330 or GM330 Smart Meter. • GMK330: CT cannot be replaced; CT ratio is 120A:40mA • GM330: CT can be purchased from GoodWe or separately; CT ratio requirement: nA/5A ◦ nA: CT primary side input current, where n ranges from 200 to 5000 ◦ 5A: CT secondary side output current • If the number of parallel inverters exceeds 2, or if the wire gauge or range of the standard CT does not meet the total current requirements of the on-site parallel system, please use the GM330 Smart Meter.
Smart dongle	WiFi/LAN Kit-20	• Uses Bluetooth signals for local configuration of device parameters and viewing device operation information; uploads system operation information to the monitoring platform via WiFi or LAN. • Ensure the firmware version of the Smart dongle is 07 or higher.
	4G Kit-G20	Uses Bluetooth signals for local configuration of device parameters and viewing device operation information; uploads system operation information to the monitoring platform via 4G.

Device Type	model	Description
grid-tied PV inverter	-	• It is recommended to use GoodWe brand grid-tied PV inverters; third-party grid-tied PV inverters are supported. • In coupling scenarios, ensure the rated output power of the grid-tied PV inverter ≤ the rated output power of the hybrid inverter. • When the coupling system is in grid-connected status, if power limitation is required, ensure: The hybrid inverter needs to be set via the grid power limitation interface in the SEMS+ App; set the grid-tied PV inverter according to the actual tool used. Note: The output power control accuracy varies for different grid-tied PV inverters; please set the grid power limitation parameter values according to the actual situation.

2.2 Product Overview

2.2.1 Residential Three-Phase All-in-One Unit

Residential Three-Phase All-in-One Unit:
The Residential Three-Phase All-in-One Unit adopts a blind plug stacking connection method and integrates the Inverter and Battery units through modular design.

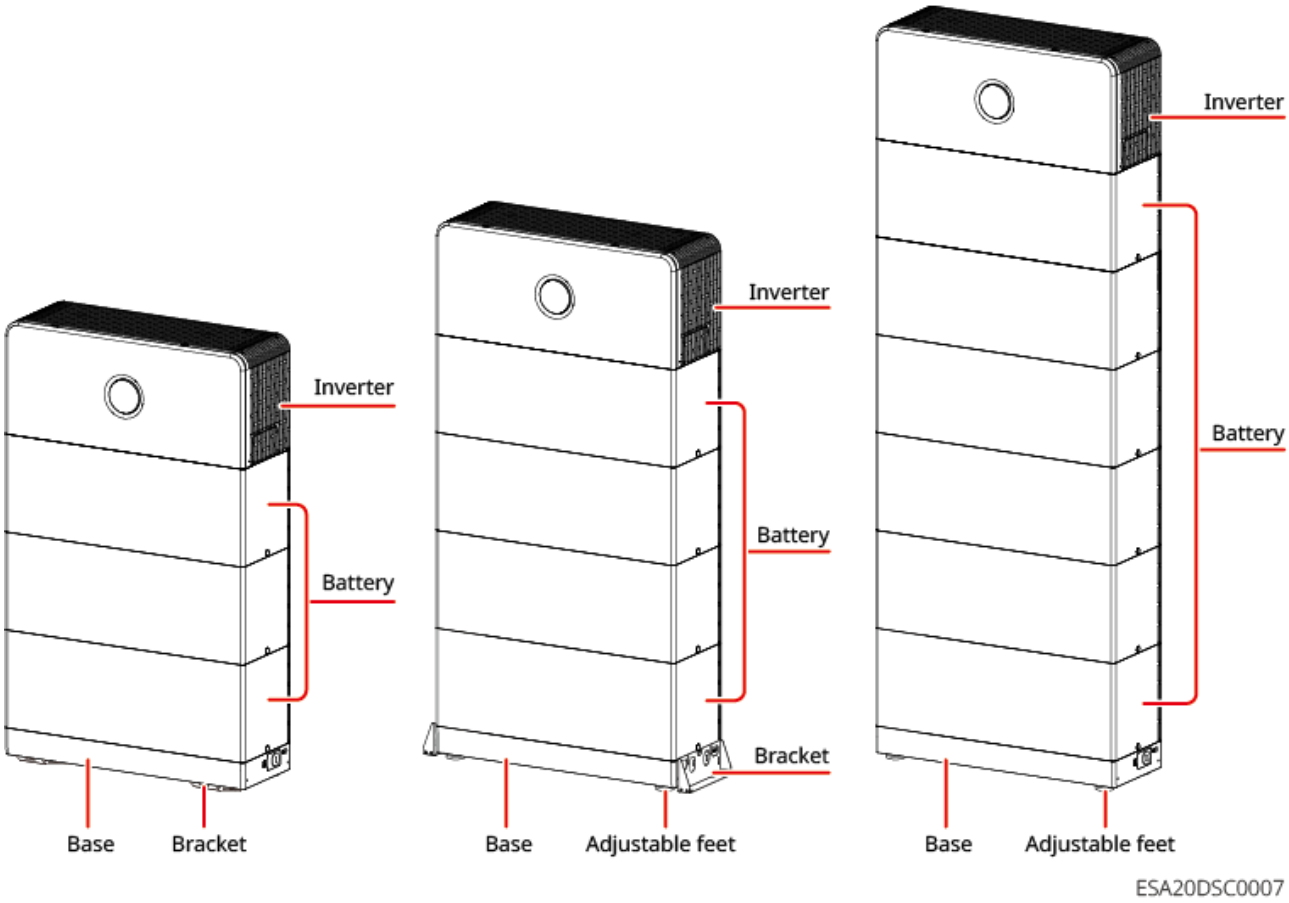

The energy storage system supports Battery capacity expansion. The total Battery capacity is determined by the number and specifications of Battery modules. Configuration must strictly adhere to the limitations specified in this section. Overall system configuration description:
A: GW5.1-BAT-D-G20, GW5.1-BAT-D-G21, GW6.0-BAT-D-G20
B: GW8.3-BAT-D-G20, GW8.3-BAT-D-G21, GW9.0-BAT-D-G20

Mounting Method	Expansion Groups	Single Group Stacking	Total Batteries
Floor Installation	≤3 groups	Wall-spaced: ≤4 units Wall-mounted: ≤6 units	≤12 units
Wall-mounted Installation (**A**)	≤3 groups	≤3 units	≤9 units
Wall-mounted Installation(**A/B/A+B**)	≤3 groups	≤2 units	≤6 units

Mounting Method	Expansion Groups	Single Group Stacking	Total Batteries
Note: Expansion Groups × Single Group Stacking Quantity ≤ Total System Battery Count			

Wall-mounted Installation

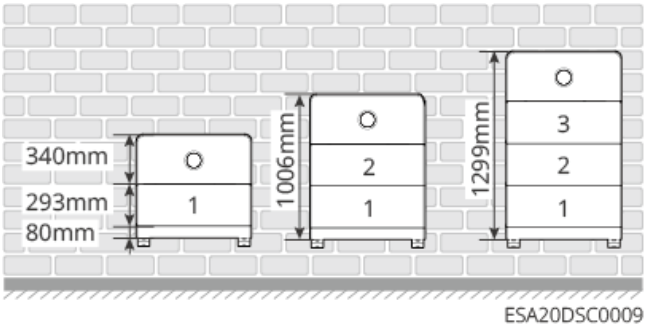

Installation

Floor-mounted Installation

- Installation against the wall

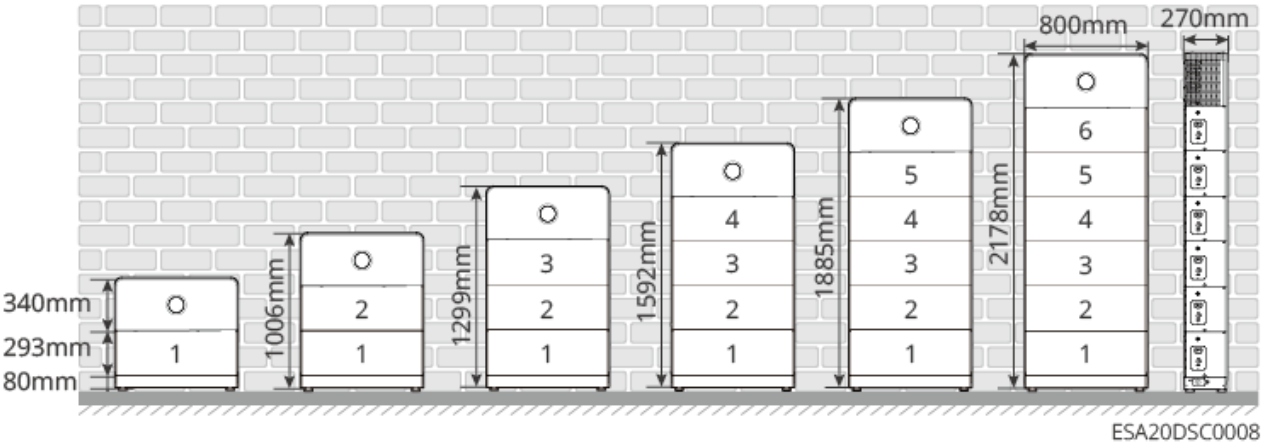

- Installation away from the wall

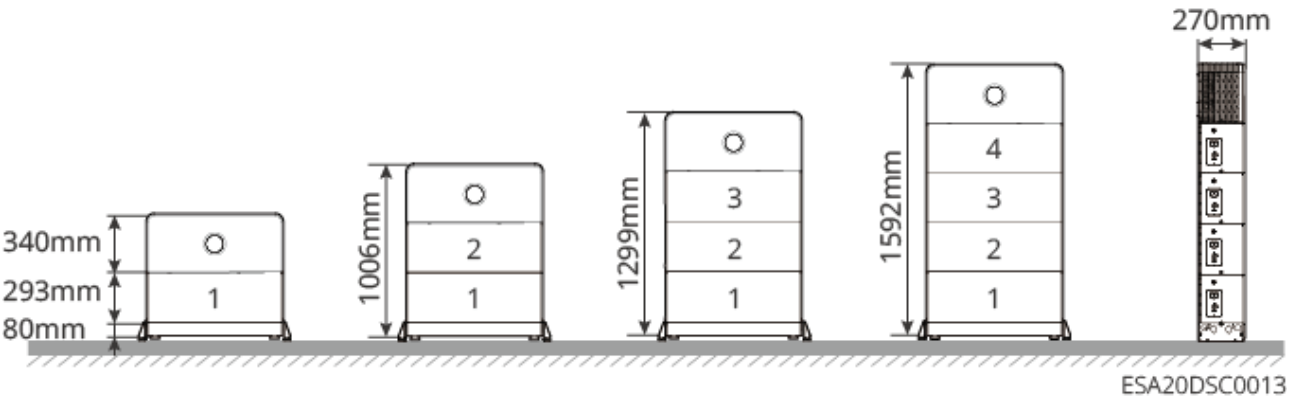

Cluster Expansion Installation

- Floor-mounted installation

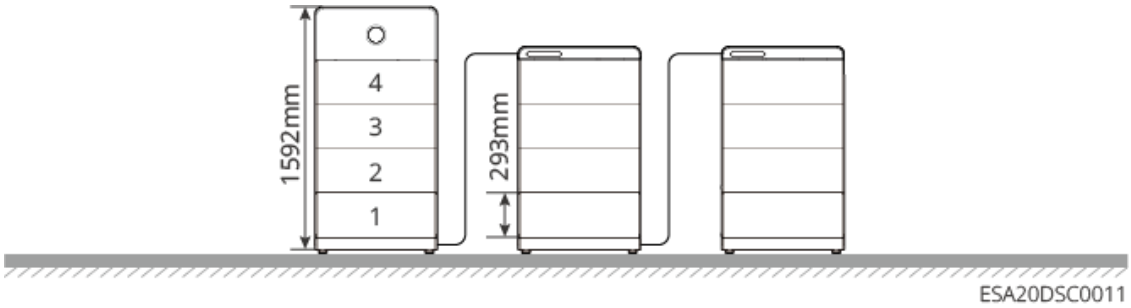

- Wall-mounted installation

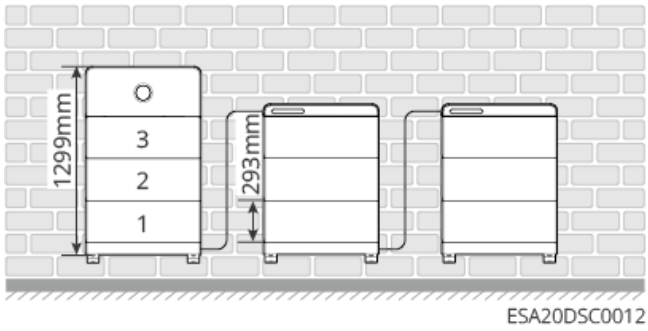

Inverter:

The Inverter in the photovoltaic system controls and optimizes the energy flow through the integrated energy management system. It can supply the electricity generated in the photovoltaic system for load use, store it in the Battery, output it to the grid, etc.

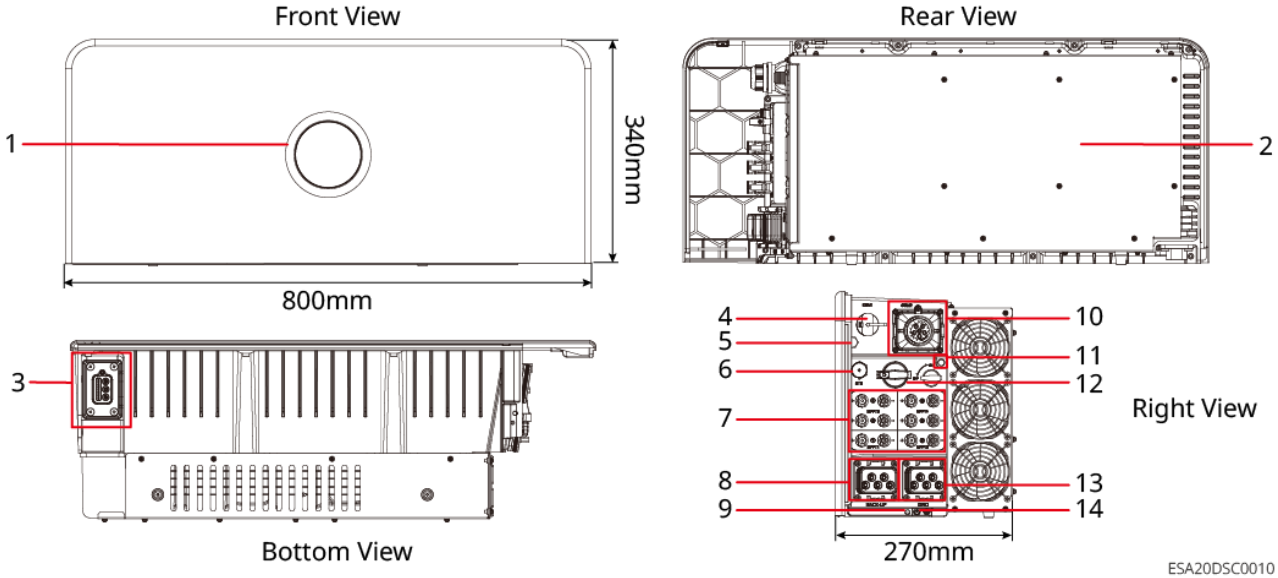

No.	Component/Silkscreen	Description
1	indicator	Indicates the operating status of the inverter.
2	heat sink	Dissipates heat for the inverter.
3	Connector	The power and communication port connecting the inverter to the battery.
4	Smart Communication Stick Connection Port	• Can connect to smart communication sticks, such as WiFi/LAN communication modules. Please select the module type based on actual requirements. • Supports connecting a USB flash drive for local inverter software version upgrades.
5	Ventilation valve	-
6	STS Communication Interface	Reserved
7	PV Input Terminals	For ETA models only. BTA models do not have PV input terminals. • Can connect to DC input cables from PV modules. • The number of PV input terminals is as follows: ◦ GW5K-ETA-G20, GW6K-ETA-G20, GW8K-ETA-G20, GW6K-EHA-G20: 3 ◦ GW9.999K-ETA-G20, GW10K-ETA-G20, GW12K-ETA-G20, GW15K-ETA-G20, GW20K-ETA-G20, GW25K-ETA-G20, GW29.999K-ETA-G20, GW30K-ETA-G20: 4
8	BACK-UP Port	Connects to AC lines, connecting to critical loads or grid-tied inverters.
9	Battery Mounting Holes	Secures the inverter and the battery.

No.	Component/Silkscreen	Description
10	Communication Port	Can connect communication cables for load control, CT, RS485, Remote Shutdown/Rapid Shutdown, DRED (Australia)/RCR (Europe), etc.
11	Carrying Handle Mounting Holes	Used for installing the carrying handle. Used when moving the inverter.
12	DC Switch	For ETA models only. BTA models do not have a DC switch. Controls the connection or disconnection of the DC input.
13	GRID Port	Connects to AC lines, connecting the inverter to the grid.
14	Grounding terminal	Connects to the chassis protective ground wire.

Battery:

The Battery system can store and release electricity according to the requirements of the photovoltaic energy storage system. The input and output ports of this energy storage system are high-voltage direct current.

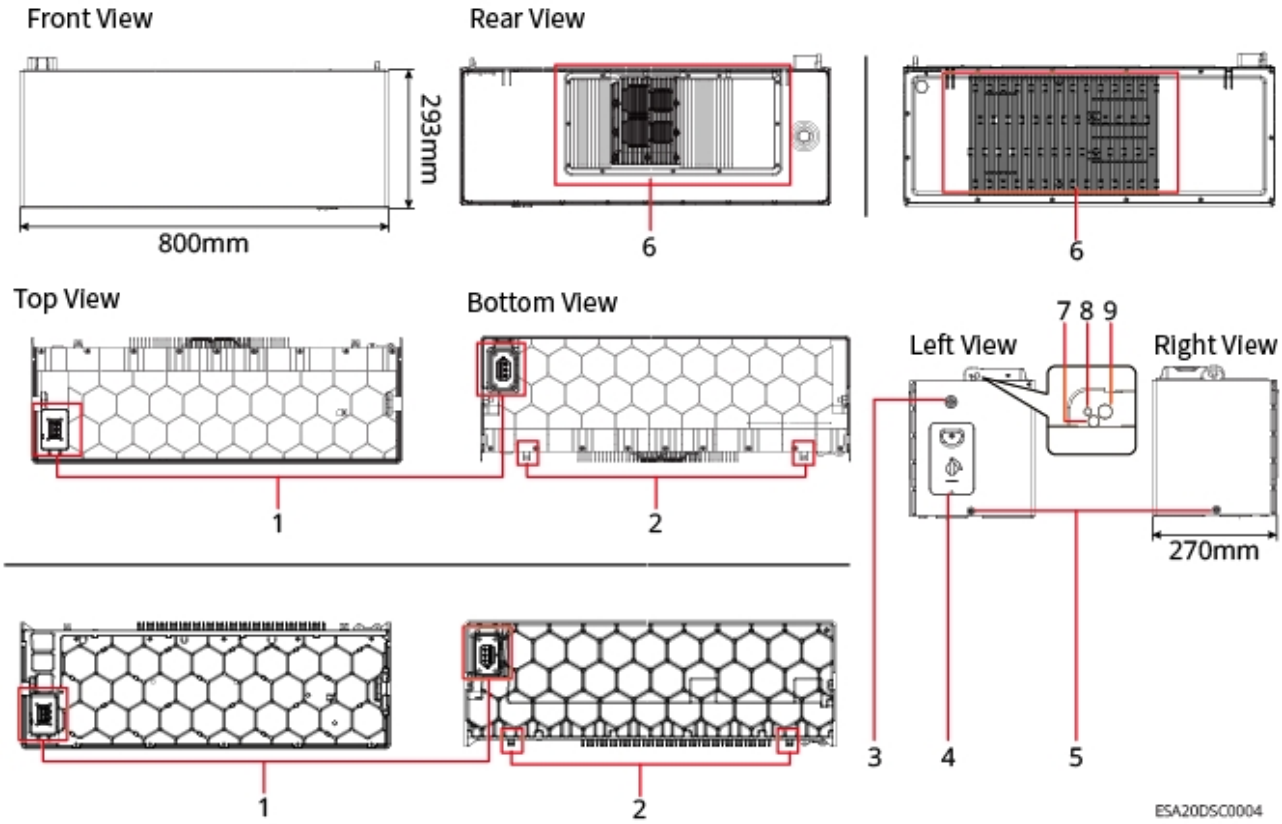

No.	Component	Description
1	Connector	Power and Communication Port for connecting battery to battery, and battery to inverter.
2	Anti-tip bracket fixing hole	Used for fixing the battery to the wall.

No.	Component	Description
3	Multi-function button indicator light	• Indicates the battery operating status. • Battery black start function: When there is no PV power generation in the photovoltaic system and the grid is abnormal, the inverter cannot operate normally. In this case, press and hold the multi-function button for 2 seconds to start the battery system, activate the inverter, putting the inverter into off-grid operation mode, and the battery discharges to power the load. • Battery shutdown function: Press and hold the multi-function button for >5 seconds to shut down the battery system.
4	Battery isolation switch	Battery power input/output switch.
5	Inter-battery fixing hole	Used for fixing between two batteries.
6	heat sink	Battery heat dissipation
7	Battery lifting hole	Used for lifting the battery. When stacking more than three batteries, lifting tools must be used for installation.
8	Battery or inverter fixing hole	Used for fixing between batteries or between the inverter and battery.
9	Carrying bar mounting hole	Used for installing the carrying bar. Used during manual battery handling.

2.2.2 Smart Meter

The Smart Meter measures and monitors electrical data in the photovoltaic energy storage system, such as: voltage, current, frequency, Power Factor, power, etc.

GM330&GMK330&CT

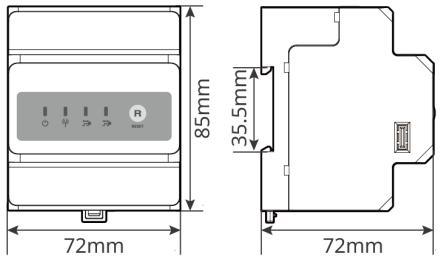

GMK10DSC0003

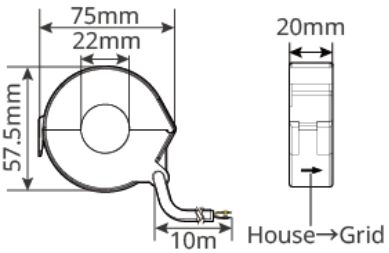

GMK10DSC0021

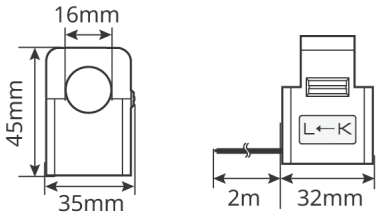

GMK10DSC0022

No.	model	Applicable Scenarios
1	GM330	CT can be purchased from GoodWe or separately. CT ratio requirement: nA: 5A • nA: CT primary side input current, n range is 200-5000 • 5A: CT secondary side output current
2	GMK330	CT is shipped with the meter. CT ratio: • 120A: 40mA

2.2.3 smart dongle

The smart dongle is mainly used for real-time transmission of various power generation data from inverters to remote monitoring platforms, and for connecting the smart dongle via an App for local device debugging.

WiFi/LAN Kit-20

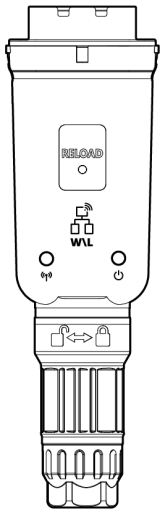

Smart dongle 0006

4G Kit-G20

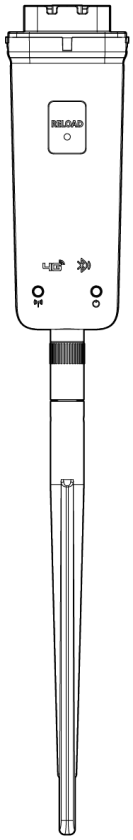

Smart dongle 0002

No.	model	Signal Type	Applicable Scenarios
1	WiFi/LAN Kit-20	WiFi, LAN, Bluetooth	Single-unit and multi-unit inverter scenarios
2	4G Kit-G20	4G, Bluetooth	Single-unit inverter scenarios.

2.3 Supported Grid Types

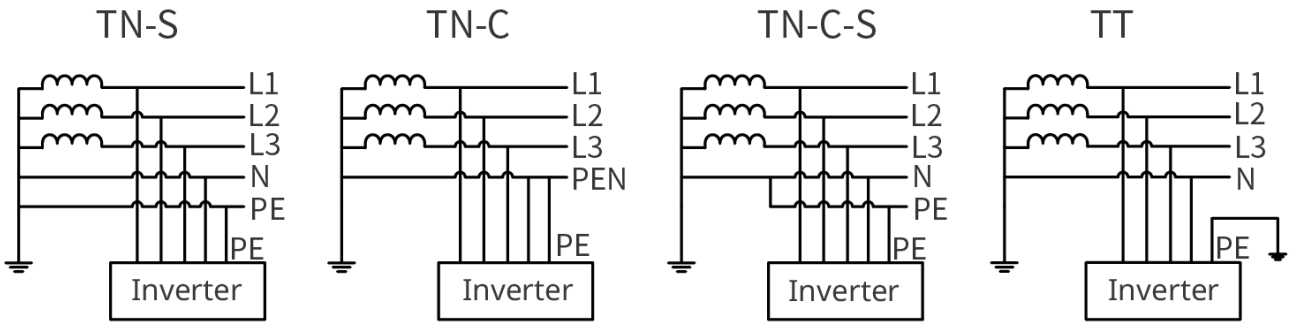

TNNET0003

2.4 System Working Mode

Self-consumption

- The basic operating mode of the system.
- PV generation first supplies power to the loads, excess energy charges the battery, and any remaining energy is sold to the grid. When PV generation cannot meet the load demand, the battery supplies power to the loads; when the battery power is also insufficient to meet the load demand, the grid supplies power to the loads.

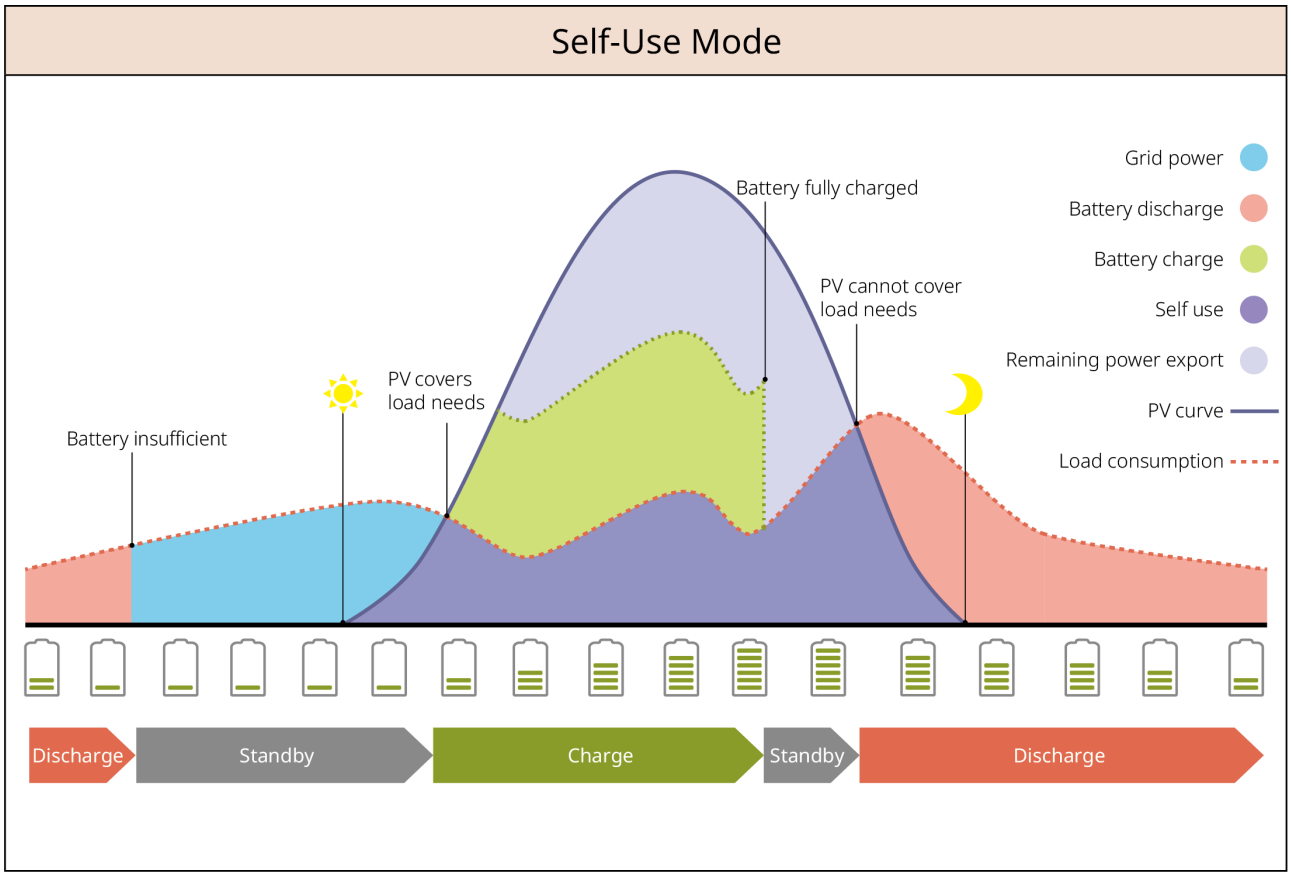

SLG00NET0009

Backup Mode

- Recommended for use in areas with unstable grids.
- When the grid fails, the inverter switches to off-grid working mode, and the battery discharges to supply power to the loads, ensuring uninterrupted power for the BACK-UP Loads. When the grid is restored, the inverter switches its working mode back to grid-connected operation.
- To ensure the battery SOC is sufficient to maintain normal system operation during

off-grid periods, the system will charge the battery using PV or by purchasing electricity from the grid to the backup power SOC during grid-connected operation. If purchasing electricity from the grid to charge the battery, please ensure compliance with local grid laws and regulations.

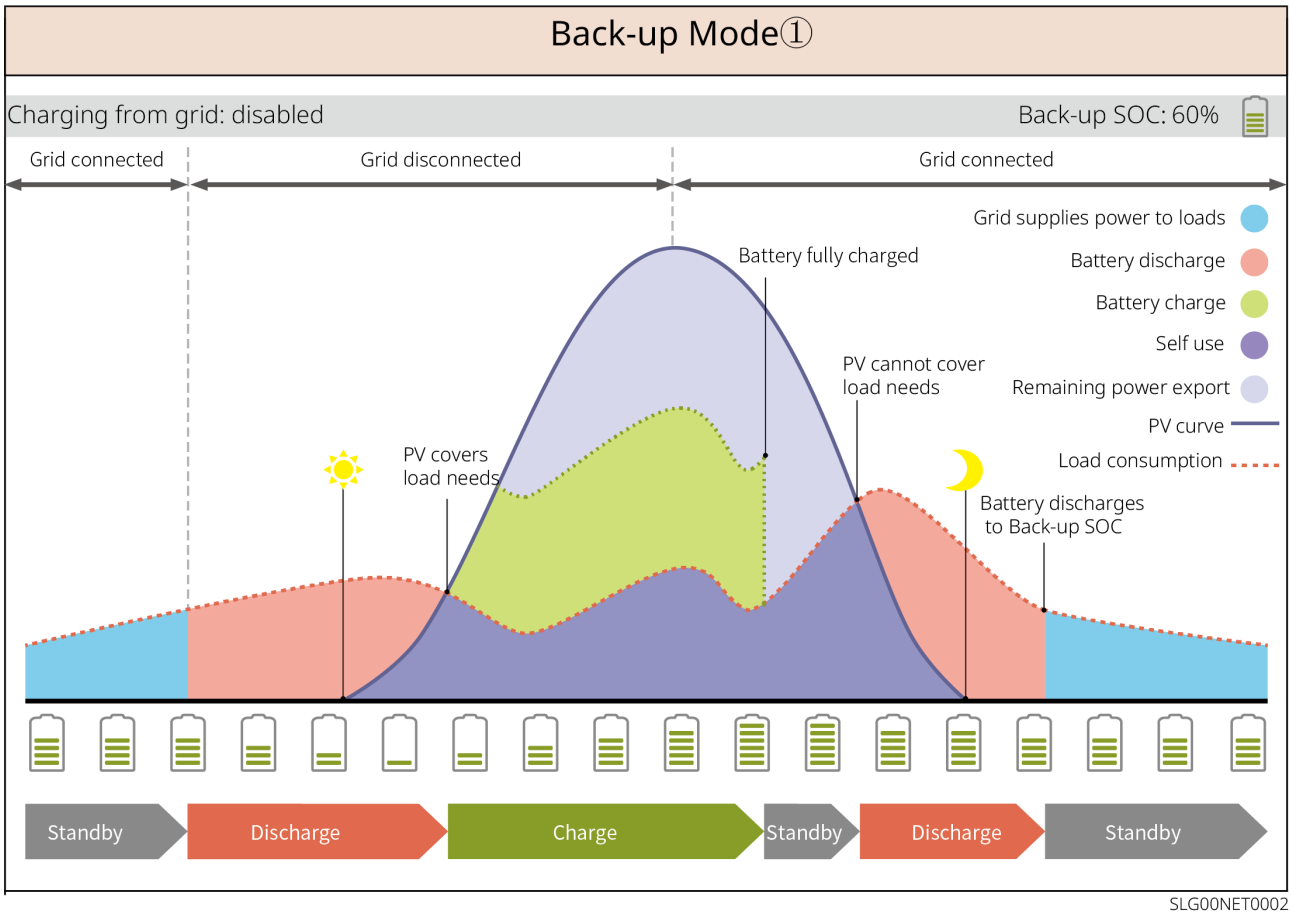

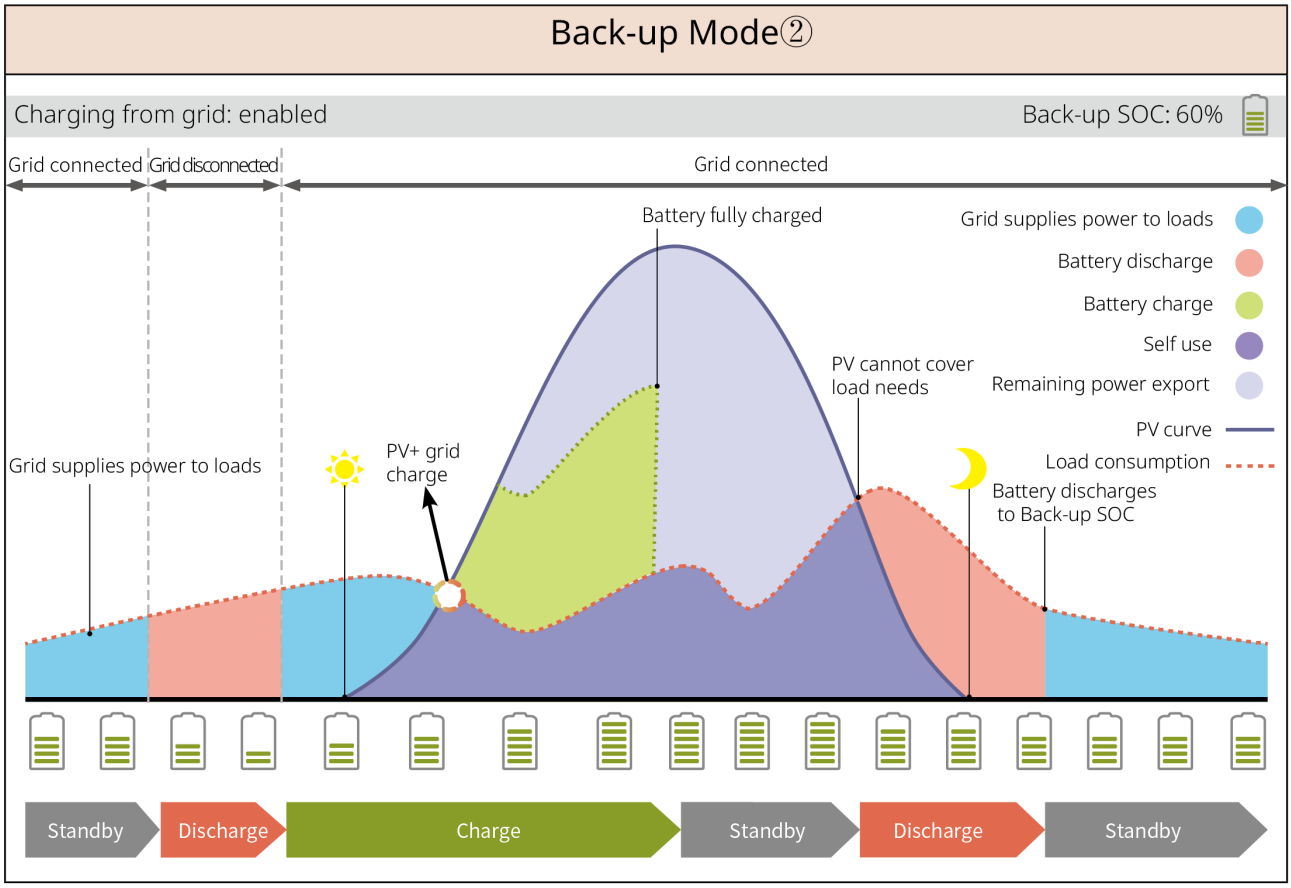

SLG00NET0003

TOU Mode

In compliance with local laws and regulations, buy and sell electricity during different time periods based on the difference between peak and valley grid electricity prices. For example: During valley price periods, set the battery to charging mode to purchase electricity from the grid for charging; during peak price periods, set the battery to discharging mode to supply power to the loads via the battery.

TOU Mode①

PV: Charge battery in priority

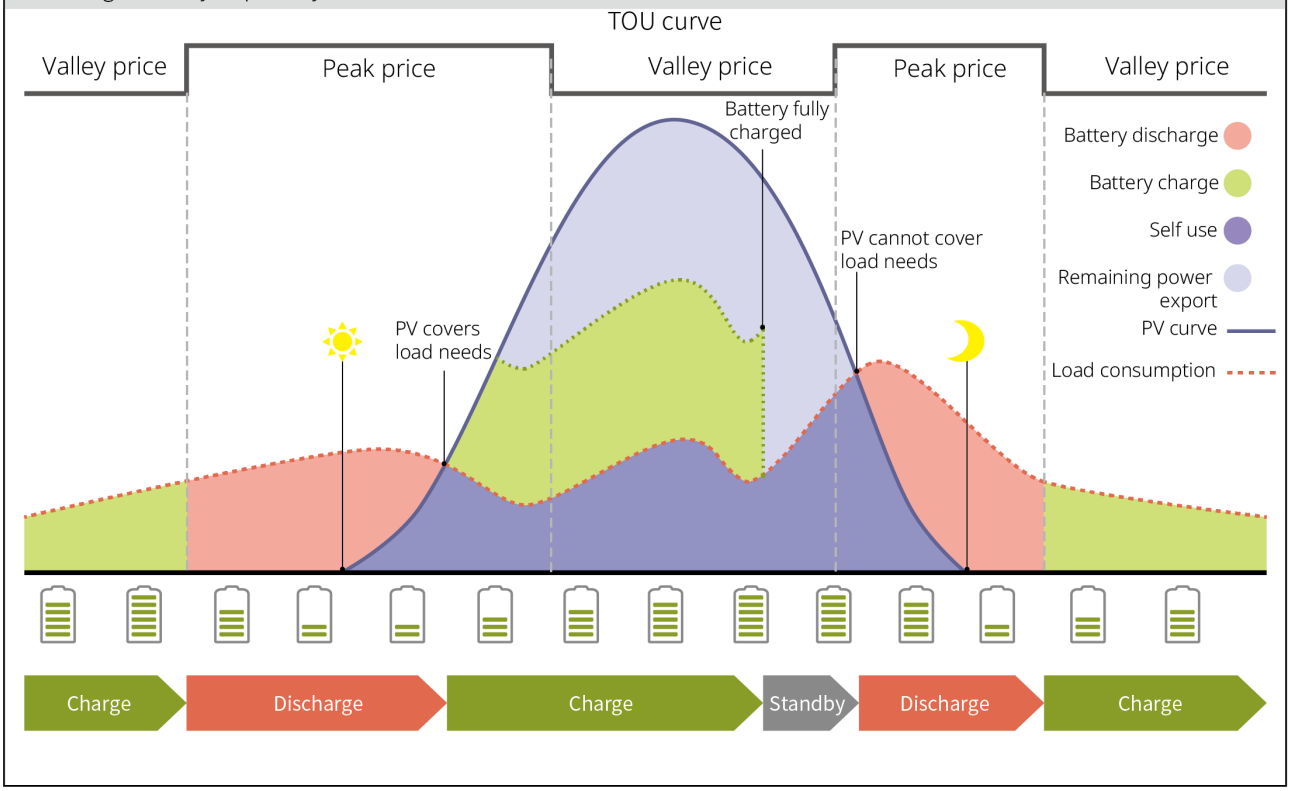

SLG00NET0004

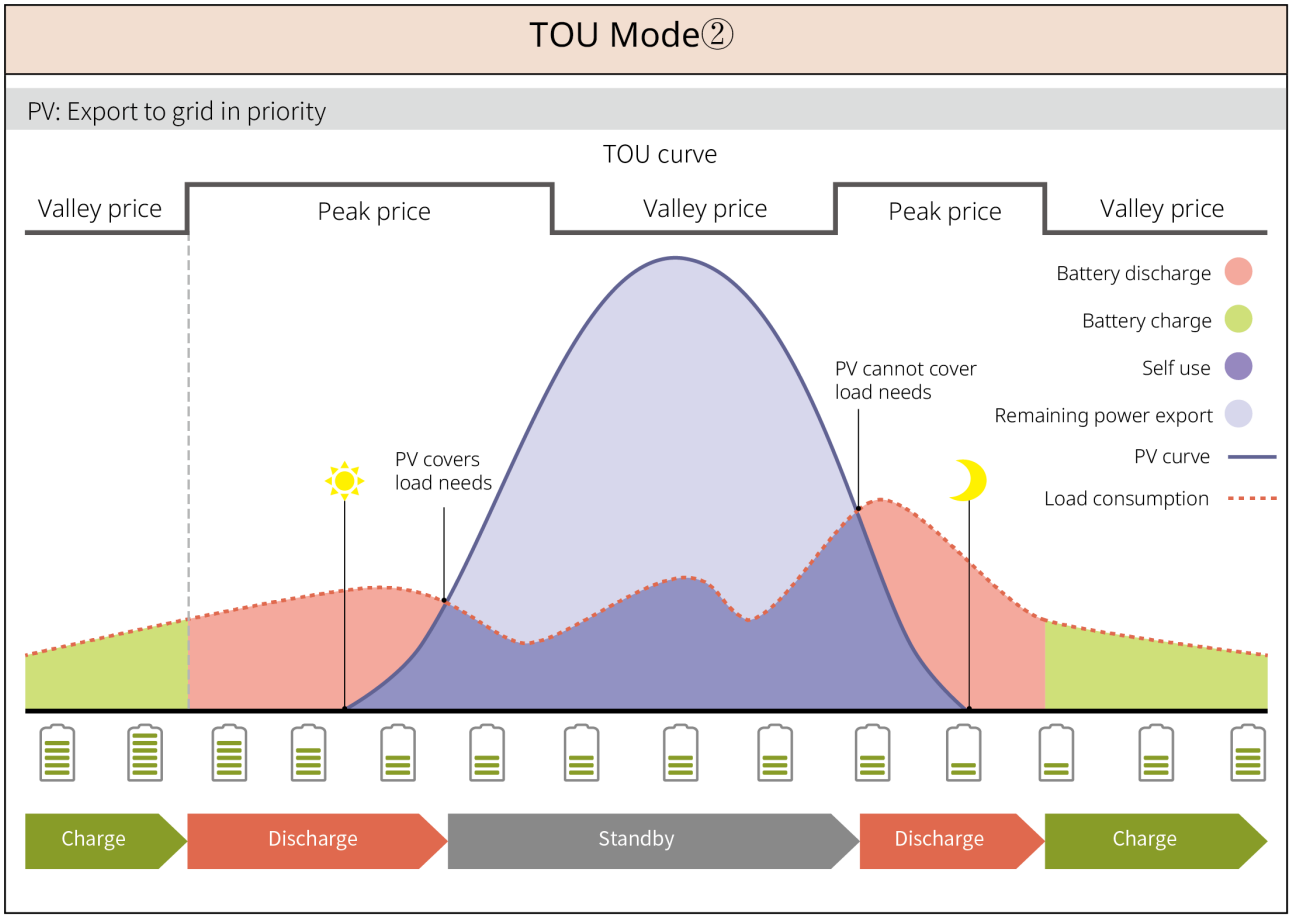

SLG00NET0005

Delayed Charging Mode

- Suitable for areas with grid-connected power output limits.
- Setting a peak power limit can use PV generation exceeding the grid connection limit to charge the battery; or setting a PV charging period to utilize PV generation for charging the battery during that period.

Smart Charging ①

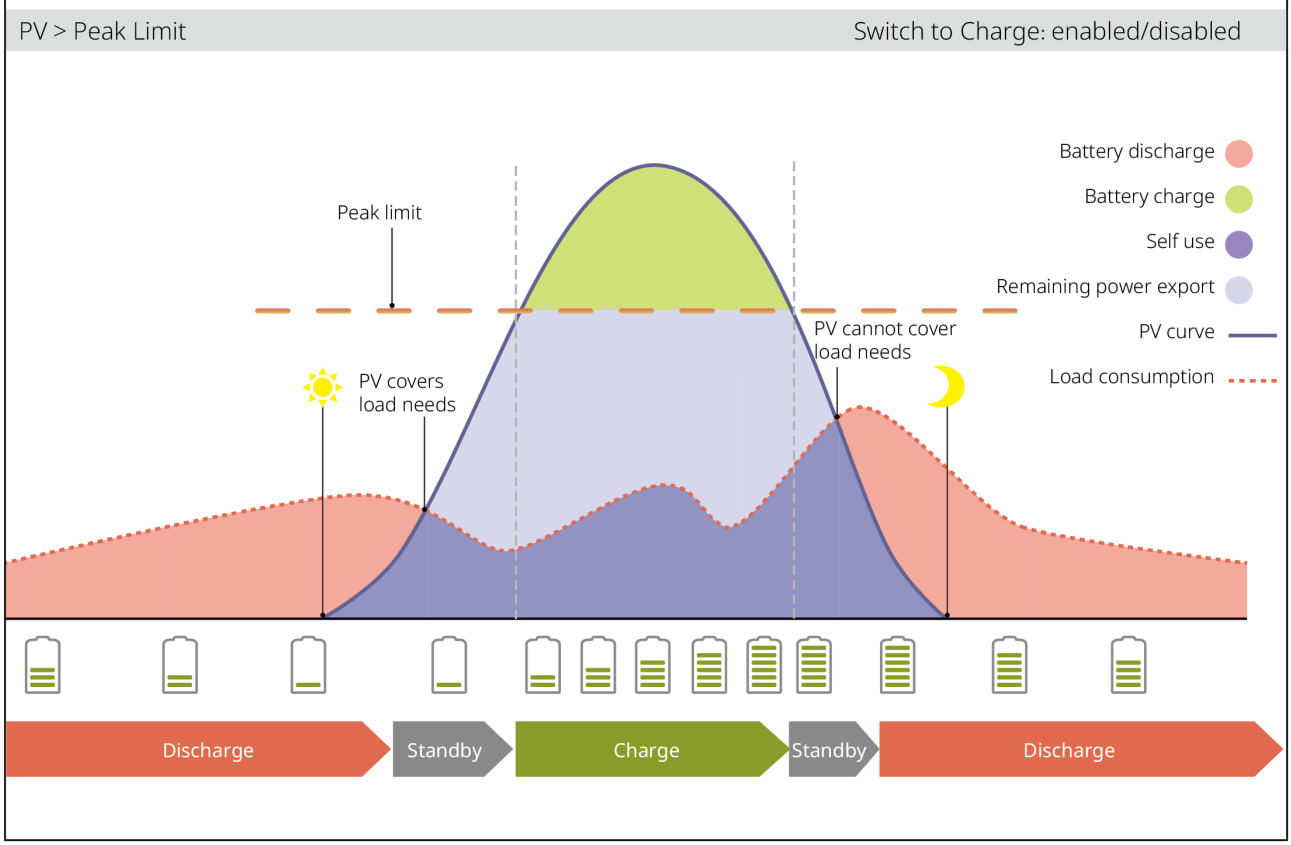

SLG00NET0006

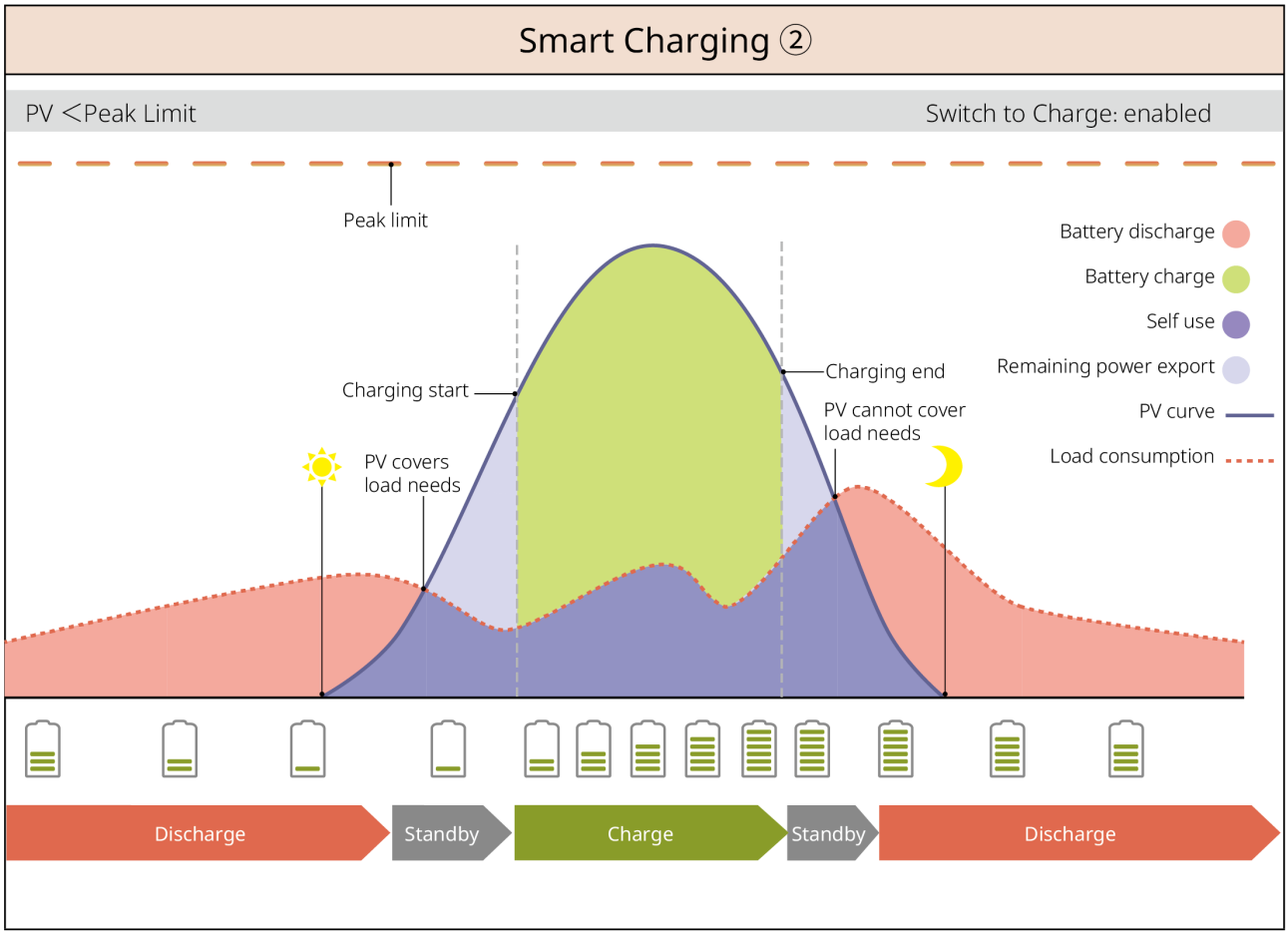

SLG00NET0007

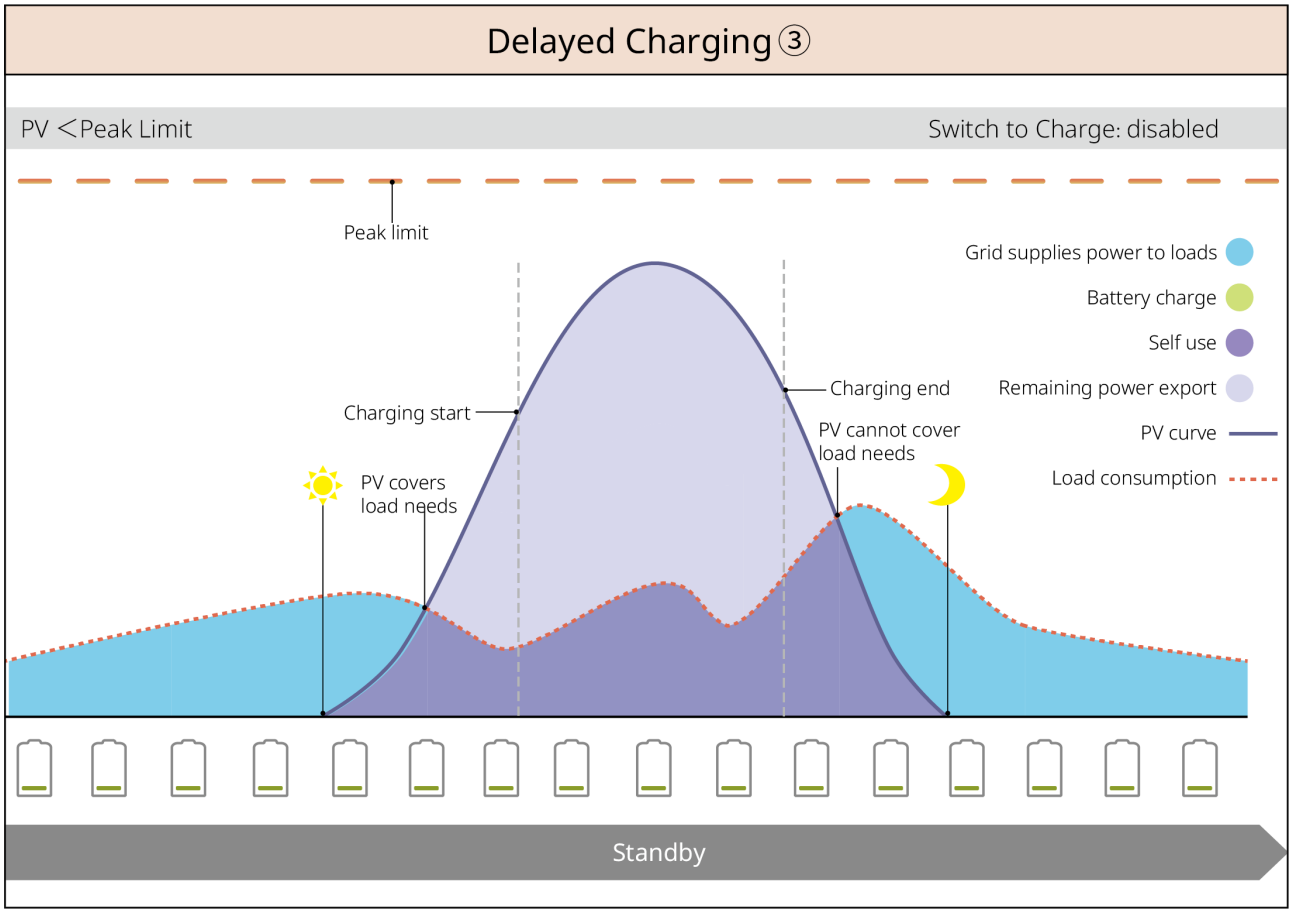

Demand Control Mode

- Primarily applicable to commercial and industrial scenarios.
- When the total load power consumption exceeds the electricity quota within a short period, battery discharge can be used to reduce the portion of consumption exceeding the quota.
- When the battery SOC is lower than the reserved SOC for demand control, the system purchases electricity from the grid based on the time period, load consumption, and peak purchase power limit.

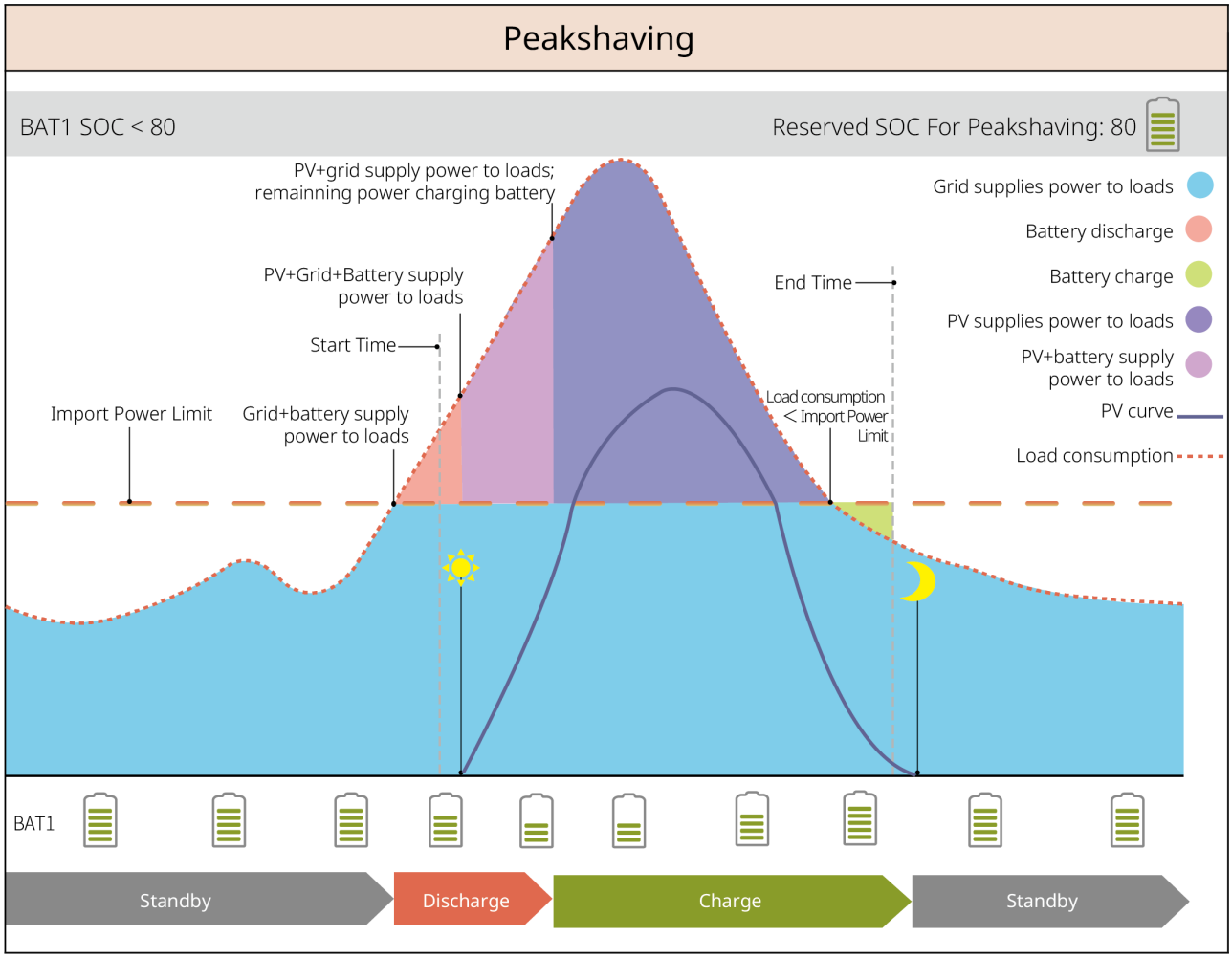

SLG00NET0001

Off-grid Mode

NOTICE

When the inverter is not connected to the battery system, do not operate in pure off-grid mode.

When the grid fails, the inverter switches to off-grid working mode.

- During the day, PV generation first supplies power to the loads, and excess energy charges the battery.
- At night, the battery discharges to supply power to the loads, ensuring uninterrupted power for the BACK-UP Loads.

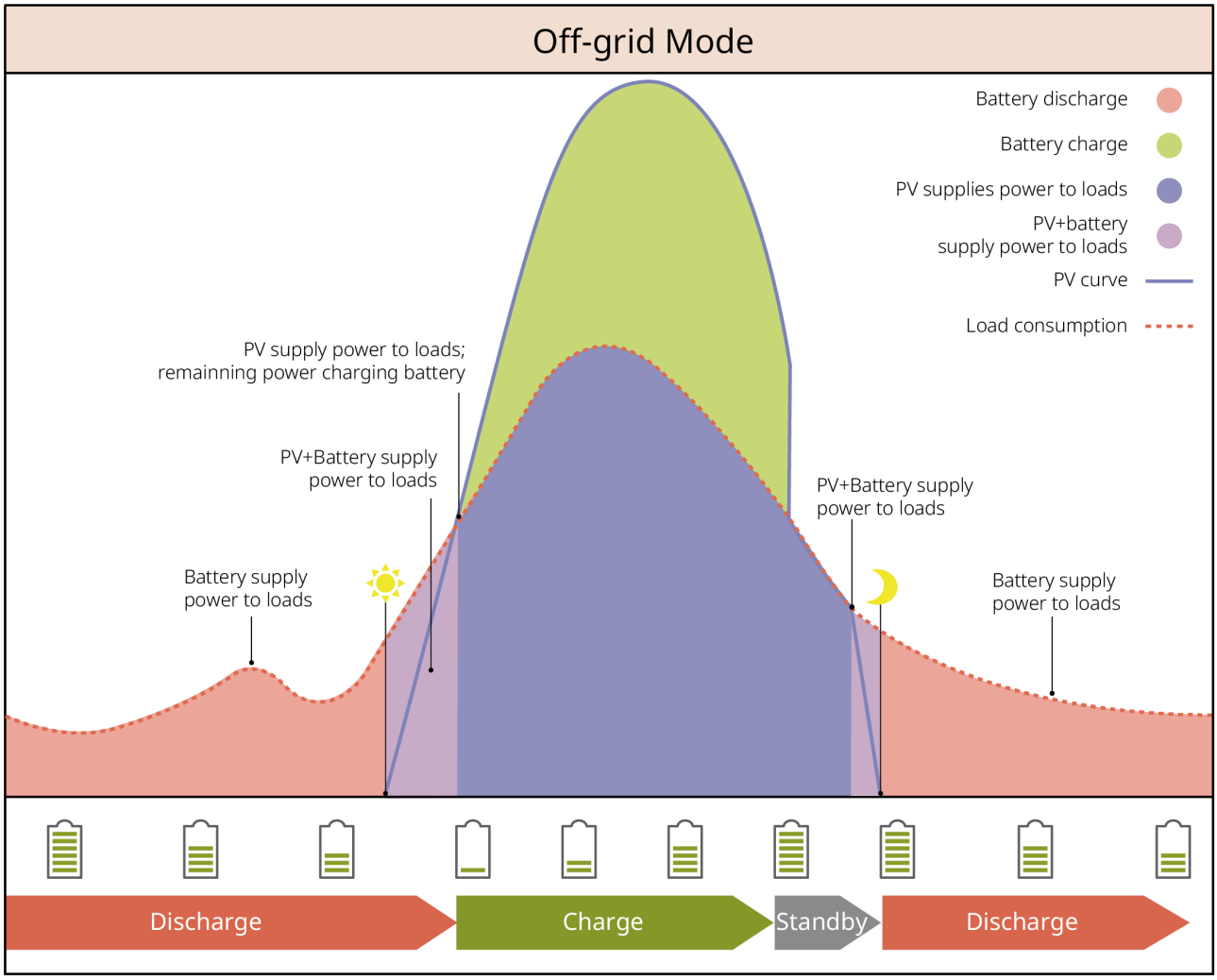

SLG00NET0012

2.5 Features

NOTICE
Please refer to the actual product configuration for specific functional features.

AFCI

The inverter integrates an AFCI circuit protection device to detect arc faults and quickly cut off the circuit when detected, thereby preventing electrical fires.

Causes of arc generation:

- Damage to connector connections in the PV system.
- Incorrect or damaged cable connections.
- Aging of connectors or cables.

Fault handling methods:

1. When the inverter detects an arc, you can view the fault type via the App.
2. If the inverter triggers a fault <5 times within 24 hours, it will automatically restore grid connection after a 5-minute wait. After the 5th arc fault, the fault must be cleared before the inverter can resume normal operation. For specific operations, please refer to the *SEMS+ App User Manual*.

model	Label	Description
GW5K-ETA-G20 GW6K-ETA-G20 GW8K-ETA-G20	AFCI：F-I-AFPE-1-2/1-2	F（Full coverage）：Full coverage of inverter PV input ports I（Integrated）：Integrated within the inverter AFPE（arc fault protection equipment）：Combines both AFD and AFI arc detection functions 1：One pair of PV input ports (PV+, PV-) connects to one PV input string 2/1：One arc detection channel has 2 MPPT inputs; One arc detection channel has 1 MPPT input; 2：Has 2 arc detection channels
GW9.999K-ETA-G20 GW10K-ETA-G20 GW12K-ETA-G20 GW15K-ETA-G20 GW20K-ETA-G20	AFCI：F-I-AFPE-1-2/2-2	F（Full coverage）：Full coverage of inverter PV input ports I（Integrated）：Integrated within the inverter AFPE（arc fault protection equipment）：Combines both AFD and AFI arc detection functions 1：One pair of PV input ports (PV+, PV-) connects to one PV input string 2/2：Each arc detection channel has 2 MPPT inputs; 2：Has 2 arc detection channels

model	Label	Description
GW25K-ETA-G20 GW29.999K-ETA-G20 GW30K-ETA-G20	AFCI：F-I-AFPE-1-2/4-2	F（Full coverage）：Full coverage of inverter PV input ports I（Integrated）：Integrated within the inverter AFPE（arc fault protection equipment）：Combines both AFD and AFI arc detection functions 1：One pair of PV input ports (PV+, PV-) connects to one PV input string 2/4：One arc detection channel has 2 MPPT inputs; One arc detection channel has 4 MPPT inputs; 2：Has 2 arc detection channels

Three-Phase Unbalanced Output

Both the grid-tie side and the BACK-UP side of the inverter support three-phase unbalanced output, allowing connection of loads with different power ratings to each phase. The maximum output power per phase for different models is shown in the table below:

No.	model	Single-Phase Maximum Output Power
1	GW5K-ETA-G20 GW5K-BTA-G20	2.5kW
2	GW6K-ETA-G20 GW6K-BTA-G20	3kW
3	GW8K-ETA-G20 GW8K-BTA-G20	4kW
4	GW9.999K-ETA-G20 GW9.999K-BTA-G20	5kW
5	GW10K-ETA-G20 GW10K-BTA-G20	5kW
6	GW12K-ETA-G20 GW12K-BTA-G20	6kW

No.	model	Single-Phase Maximum Output Power
7	GW15K-ETA-G20 GW15K-BTA-G20	7.3kW
8	GW20K-ETA-G20 GW20K-BTA-G20	7.3kW
9	GW25K-ETA-G20 GW25K-BTA-G20	11kW
10	GW29.999K-ETA-G20 GW29.999K-BTA-G20	11kW
11	GW30K-ETA-G20 GW30K-BTA-G20	11kW

Rapid Shutdown (RSD) Rapid Shutdown
In a rapid shutdown system, the rapid shutdown transmitter and receiver work together to achieve rapid system shutdown. The receiver maintains module output by receiving signals from the transmitter. The transmitter can be external or built into the inverter. In case of an emergency, the transmitter can be deactivated by enabling an external trigger device, thereby shutting down the modules.

- External Transmitter
  - Transmitter models: GTP-F2L-20, GTP-F2M-20
    https://en.goodwe.com/Ftp/Installation-instructions/RSD2.0-transmitter.pdf
  - Receiver models: GR-B1F-20, GR-B2F-20
    https://en.goodwe.com/Ftp/EN/Downloads/User%20Manual/GW_RSD-20_Quick-Installation-Guide-POLY.pdf
- Built-in Transmitter
  - External trigger device: External switch
  - Receiver models: GR-B1F-20, GR-B2F-20
    https://en.goodwe.com/Ftp/EN/Downloads/User%20Manual/GW_RSD-20_Quick-Installation-Guide-POLY.pdf

3 Check and Storage

3.1 Check Before Receiving

Before receiving the product, please carefully check the following:

1. Check if the outer packaging is damaged, such as deformation, holes, cracks, or other signs that could cause damage to the equipment inside the box. If damaged, do not open the packaging and contact your dealer.
2. Check if the device model is correct. If it does not match, do not open the packaging and contact your dealer.

3.2 deliverables

> ⚠WARNING
>
> Check if the type and quantity of the delivered items are correct, and if there is any damage to the appearance. If there is any damage, please contact your dealer. After removing the delivered items from the packaging, do not place them on rough, uneven, or sharp surfaces to avoid paint chipping.

3.2.1 Inverter Deliverables

Part	Description	Part	Description
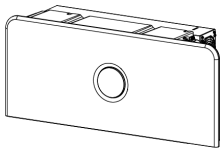	Inverter x 1		Top decorative cover x 1
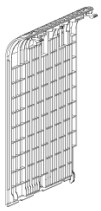	Left decorative cover x 1		Right decorative cover x 1

Part	Description	Part	Description
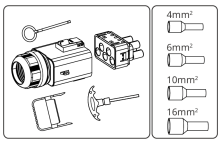 or 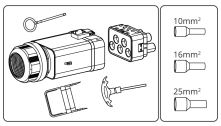	AC terminal kit x 2 • AC wiring terminal x 2 • PIN terminal x N ◦ 5-20kW: ▪ 4mm² x 5 ▪ 6mm² x 5 ▪ 10mm² x 5 ▪ 16mm² x 5 ◦ 25-30kW: ▪ 10mm² x 5 ▪ 16mm² x 5 ▪ 25mm² x 5	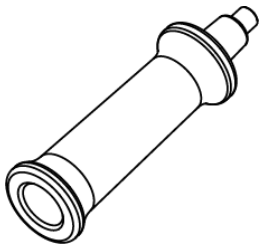	Handle x 2
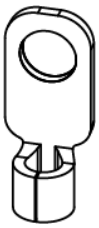	OT grounding terminal x 1	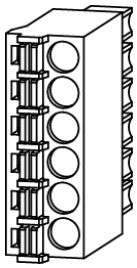	6PIN communication terminal x 2
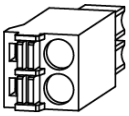	2PIN communication terminal x 2		PIN terminal x 16
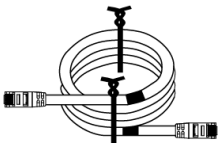	CT connection cable x 1	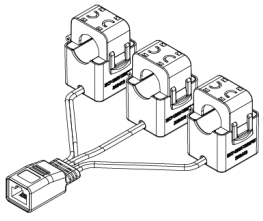	CT x 1

Part	Description	Part	Description
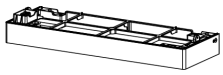	Battery base x 1	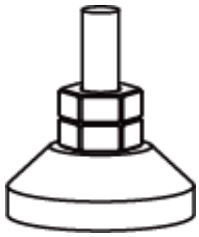	Adjustable feet x 4
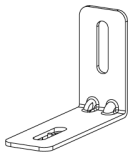	Anti-tip bracket x 4	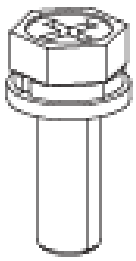	M5*16 screw x 9
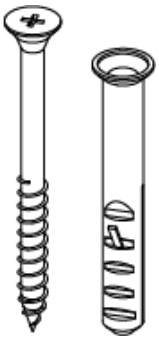	M5*60 expansion screw x 4	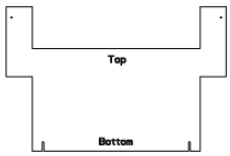	Drilling template paper x 2
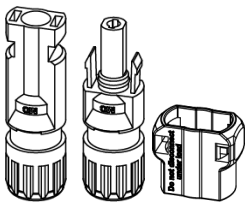		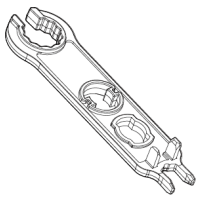	PV terminal unlocking tool x N N: China region x 0; other regions x 1.

Part	Description	Part	Description
	PV terminal and PV terminal anti-removal cover • GW5K-ETA-G20, GW6K-ETA-G20, GW8K-ETA-G20, GW6K-EHA-G20: 3 • GW9.999K-ETA-G20, GW10K-ETA-G20, GW12K-ETA-G20, GW15K-ETA-G20, GW20K-ETA-G20, GW25K-ETA-G20, GW29.999K-ETA-G20, GW30K-ETA-G20: 4 • GW5K-BTA-G20, GW6K-BTA-G20, GW8K-BTA-G20, GW9.999K-BTA-G20, GW10K-BTA-G20, GW12K-BTA-G20, GW15K-BTA-G20, GW20K-BTA-G20, GW25-BTA-G20, GW29.999K-BTA-G20, GW30K-BTA-G20: 0	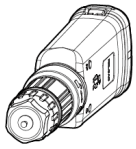	Smart dongle x 1

Part	Description	Part	Description
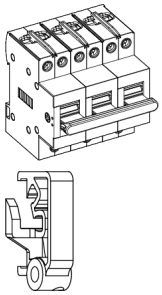	• (Australia only) Manual transfer switch x1 • Manual transfer switch lock x N Note: For single-unit scenarios only	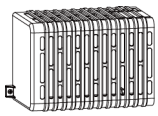	Cable cover x N N: Standard in Australia region; optional in Europe region.
	Product documentation x 1	-	-

(Europe only) Manual transfer switch

Part	Description
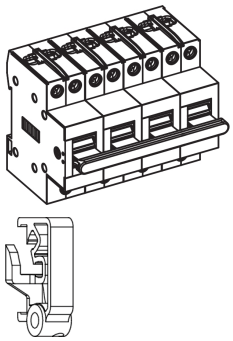	• Manual transfer switch x1 • Manual transfer switch latch x1 Note: For use in single-unit scenarios only. If needed, please contact the distributor to purchase.

3.2.2 Batteries Deliverables

Component	Instructions	Component	Description
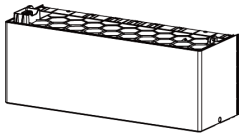	Batteryx 1	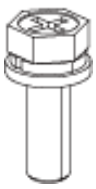	M5*16 screwx 2

Component	Instructions	Component	Description
	silica gel capx 2	-	-

Bracket (Optional)

Component	Instructions	Component	Instructions
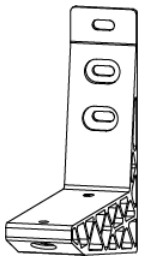	mounting bracketx 2		M10x 6
	M10x 4	-	-

3.2.2.1 Battery Expansion Kit deliverables (Optional)

NOTICE
The system supports 5-108kWh. A single string can stack up to 6 Battery units. If more energy is required, or if the stacking height per string needs to be reduced due to Installation conditions or other expansion scenarios, please contact GoodWe or a distributor to purchase the Battery expansion kit.

Component	Instructions	Component	Instructions
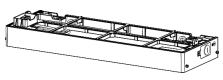	Base x 1	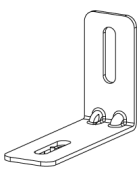	locking bracket x 4

Component	Instructions	Component	Instructions
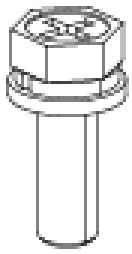	M5 x 7	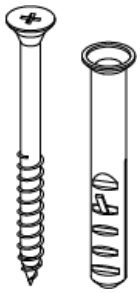	M6 x 4
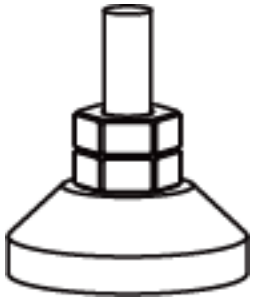	Adjustable feet x 4	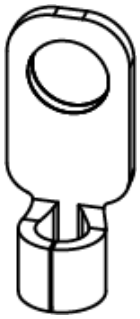	OTGrounding terminal x 1
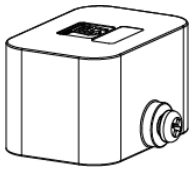	Terminal resistor x 1	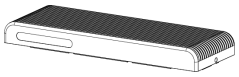	Decorative cover x 1
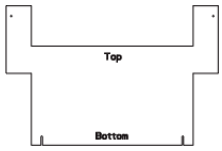	Punching mark paper x 2	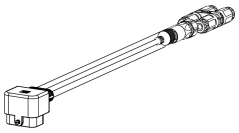	Expansion cluster harness x 1
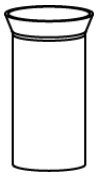	PIN terminal x 8		Expansion cluster connection positive harness x 1
	Expansion cluster connection negative harness x 1	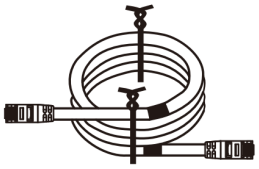	Expansion cluster network cable x 1

Component	Instructions	Component	Instructions
	silica gel cap x 2	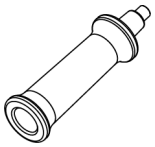	Handle x 2
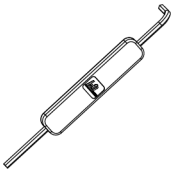	Hex key wrench x 1		Product Documentation x 1

3.2.2.2 Wall-Mounted Bracket (Optional)

Component	Instructions	Component	Instructions
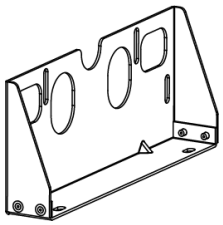	Wall-mounted bracket x 2	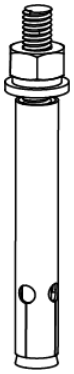	M6 x 4
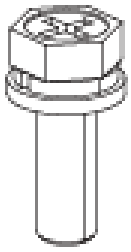	M5 fixing screw x 4	-	-

3.2.3 Smart Meter Delivery Set GM330&GMK330

3.2.3.1 Attachment List

Component	Instructions	Component	Instructions
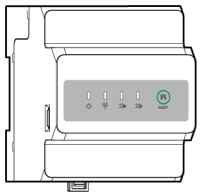	Smart Meterx1 GMK330:CT×3; GMK360: CT×6; GM330: CT x 0。		2PIN connector x1 Applicable to GM330.
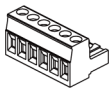	6PIN communication terminal x1 Applicable to GM330.	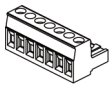	7PINcommunication terminal x1 Applicable to GM330.
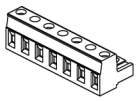	Electricity meter Applicable to GMK330/GMK360.		RS485communication terminal x 1
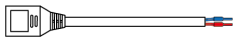	2PINterminal andRJ45terminal adapter cable x 1		screwdriver x1
	PIN terminal GMK330/GMK360: x 5 ; GM330: x 6。		Product Documentation x 1

3.3 Storage

- If the inverter has been stored for more than two years or has not been operated for more than six months after installation, it is recommended to have it inspected and tested by a professional before putting it into use.
- To ensure the good electrical performance of the internal electronic components of the inverter, it is recommended to power it on once every six months during storage. If it has not been powered on for more than six months, it is recommended to have it inspected and tested by a professional before use.
- To ensure battery performance and service life, it is recommended to avoid long-term idle storage. Prolonged storage may cause the battery to deep discharge, leading to irreversible chemical degradation, resulting in capacity decay or even complete failure, timely use is advised. If the battery needs to be stored for a long

period, please perform maintenance according to the following requirements:

NOTICE
[1] The storage time is calculated from the SN date on the battery's outer packaging. After exceeding the storage cycle, charge-discharge maintenance is required. (Battery maintenance time = SN date + charge-discharge maintenance cycle). For how to view the SN date, refer to: 10.3.Battery SN Code Meaning(Page 305). [2] After the charge-discharge maintenance is qualified, if there is a Maintaining Label on the outer box, please update the maintenance information on the Maintaining Label. If there is no Maintaining Label, please record the maintenance time and battery SOC yourself and keep the data properly for maintaining maintenance records.

Battery Model	Initial SOC Range for Battery Storage	Recommended Storage Temperature	Charge/Discharge Maintenance Cycle[1]	Battery Maintenance Method[2]
GW5.1-BAT-D-G20	30~40%	0~35℃	-20~35℃, 12 months 35~45℃, 6 months	For maintenance methods, please consult the distributor or after-sales service center.
GW8.3-BAT-D-G20				
GW5.1-BAT-D-G21				
GW8.3-BAT-D-G21				
GW6.0-BAT-D-G20	30~40%	0~35℃	-20~35℃, 12 months 35~45℃, 6 months 45~55℃, 1 month	
GW9.0-BAT-D-G20				

Packaging Requirements:
Ensure the outer packaging box is not removed and the desiccant inside the box is not missing.

Environmental Requirements:

1. Ensure the device is stored in a cool place, avoiding direct sunlight.
2. Ensure the storage environment is clean, with appropriate temperature and humidity ranges, and no condensation. If condensation is observed on the device ports, do not install the device.
   - GW5.1-BAT-D-G20, GW8.3-BAT-D-G20, GW5.1-BAT-D-G21, GW8.3-BAT-D-G21 battery storage humidity range: 5%-95%.
   - GW6.0-BAT-D-G20, GW9.0-BAT-D-G20 battery storage humidity range: 4%-100%.
3. Ensure the device is stored away from flammable, explosive, corrosive, and other hazardous materials.
4. Stacking Requirements:
   - Ensure the stacking height and orientation of the device are arranged according to the instructions on the packaging box label.
   - Ensure there is no risk of toppling after the devices are stacked.

4 Installation

DANGER

When performing equipment installation and electrical connections, please use the delivery items shipped with the box. Otherwise, any resulting equipment damage will not be covered under warranty.

4.1 Installation Requirements

4.1.1 Installation Environment Requirements

NOTICE

- InverterOperating Temperature Range: -35°C to 60°C.
- GW5.1-BAT-D-G20, GW8.3-BAT-D-G20: Charge Temperature range: -18°C-55°CDischarge Temperature Range:-20℃-55°CIf Installation is in-18℃In the following environment, Battery will be unable to continue Charge energy recovery after venting, resulting in Battery Undervoltage.
- GW5.1-BAT-D-G21, GW8.3-BAT-D-G21: Charge Temperature range: 2°C-55°CTemperature range:-20℃-55°CIf Installation is in2℃In the following environment, Battery will be unable to continue Charge energy recovery after venting, resulting in Battery Undervoltage.
- GW6.0-BAT-D-G20, GW9.0-BAT-D-G20: Charge Temperature range: -20℃-55°CTemperature range:-20℃-55°CIf Installation is at -20℃Under the following conditions, Battery will be unable to continue Charge energy recovery after venting, resulting in Battery Undervoltage.

1. The equipment must not be operated in flammable, explosive, or corrosive environments.
2. The ambient temperature of the equipment must be within the appropriate range.
3. Installation Location should be kept out of reach of children, and avoid placing Installation in easily accessible locations.
4. The equipment surface may become hot during operation to prevent burns.
5. The equipment should be protected from exposure to sunlight, rain, snow, and

other Installation conditions. It is recommended to Installation in a shaded Installation Location. If necessary, a sunshade canopy can be constructed.

6. The space must meet the ventilation and heat dissipation requirements of the equipment as well as the operational space requirements.
7. The environment must meet the equipment's Ingress Protection Rating, Inverter, Battery, and smart dongle requirements for both indoor and outdoor Installation; the electricity meter must comply with indoor Installation.
8. The height of the equipment Installation should facilitate operation and maintenance, ensuring that the equipment indicator and all labels are easily visible, and the wiring terminal is easy to operate.
9. Equipment Installation Altitude is below Max. Operating Altitude.
10. Before installing salt affected area outdoor Installation equipment, consult the manufacturer. salt affected area mainly refers to areas within 500m of the coast. The affected zone is related to factors such as sea breeze, precipitation, and terrain.
11. The equipment will generate noise during operation. Installation Location should be kept away from noise-sensitive areas such as residential zones, schools, and hospitals to prevent disturbance caused by operational noise to nearby residents.
12. Keep away from strong magnetic fields to avoid electromagnetic interference. If there is a radio station or wireless communication equipment below 30MHz near the Installation Location, please Installation the equipment according to the following requirements:

- Inverter: Add ferrite cores with multiple turns on the Inverter DC input or AC output lines, or incorporate low-pass EMI Filter; or maintain a distance of over 30m between the Inverter and radio frequency interference equipment.
- Other Equipment: The distance between the equipment and the wireless electromagnetic interference device exceeds 30m.

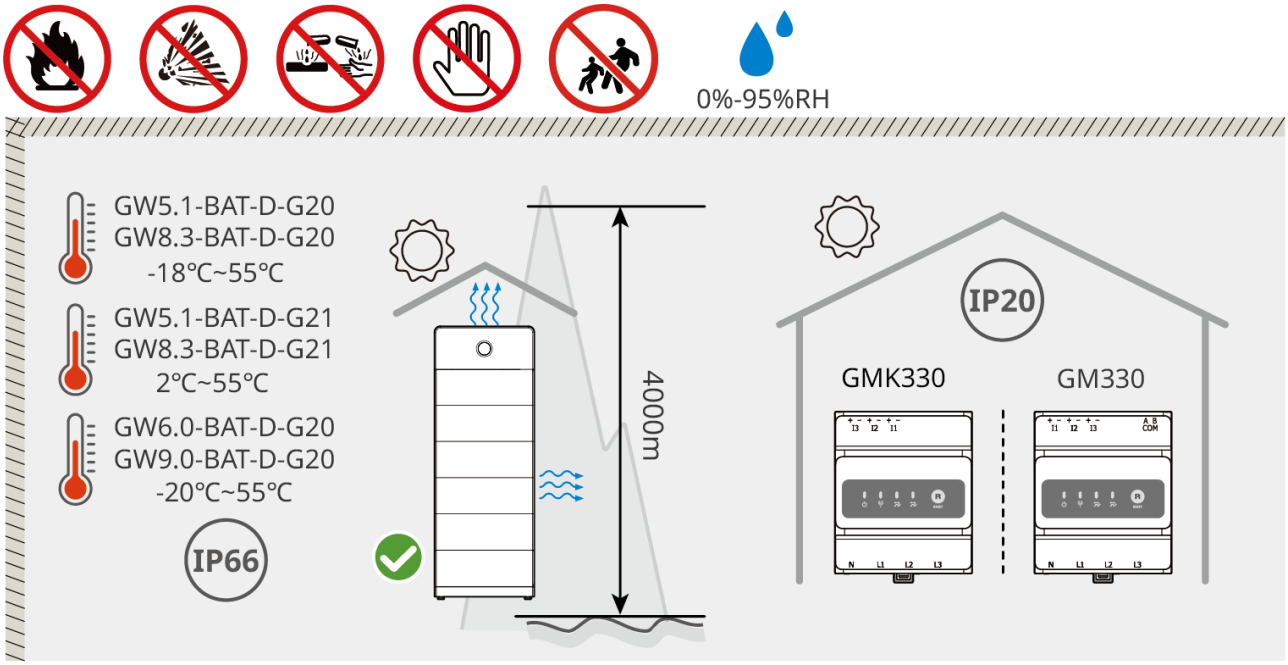

ESA20INT0011

4.1.2 Installation Space Requirements

When installing devices in the system, sufficient space should be reserved around the devices to ensure adequate installation and heat dissipation space.

- When using CAT 7E communication cables between inverters, the cable distance should not exceed 10 meters; when using CAT 5E or CAT 6E communication cables, the cable distance should not exceed 5 meters. Do not exceed 10m for communication cables, otherwise it may cause communication abnormalities.
- For installing CT, use CAT 5E or above shielded network cables, with a cable distance not exceeding 30 meters.
- For RS485 twisted-pair shielded cables used for communication between the inverter and the meter, the cable distance should not exceed 100 meters.

Communication Cable Length

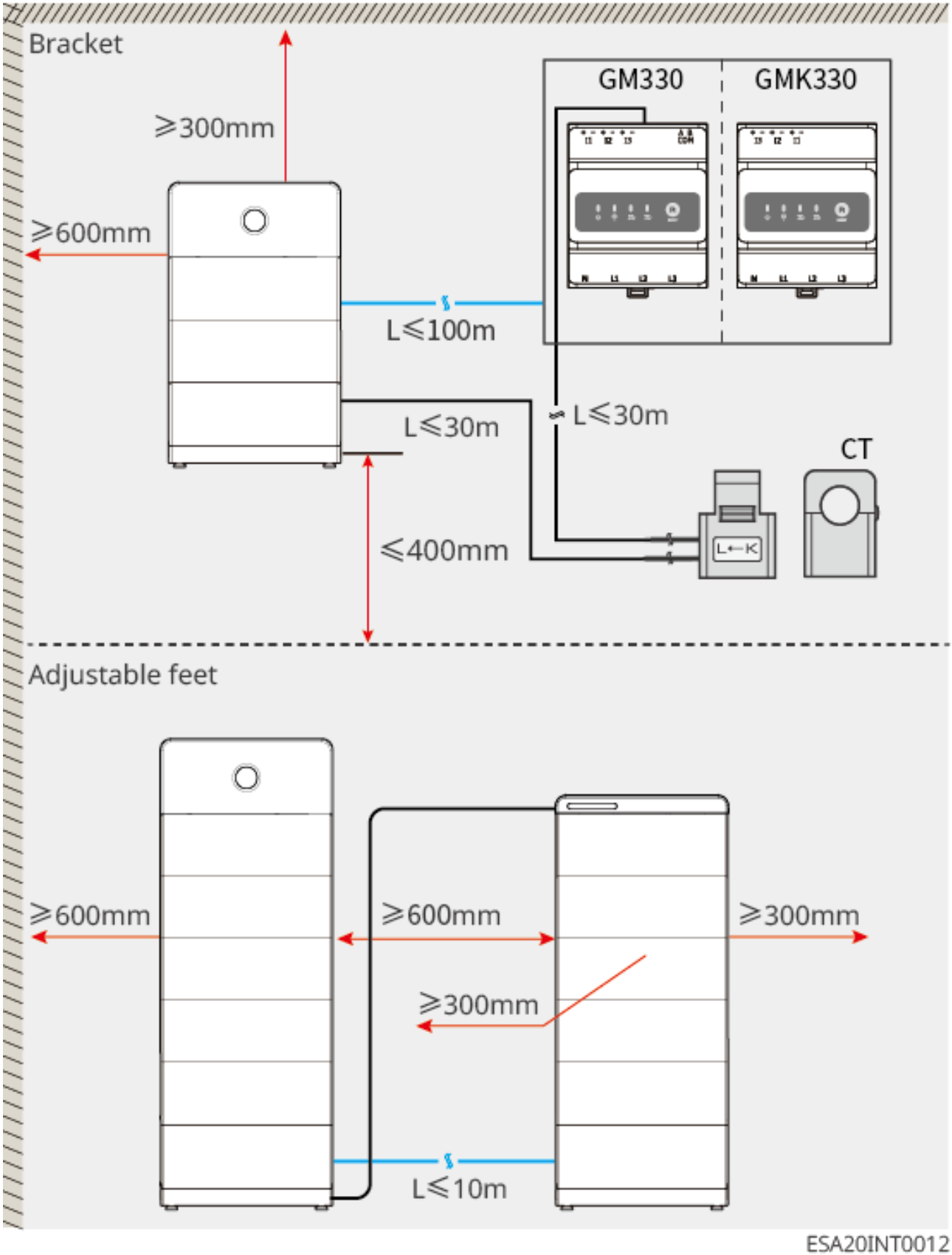

Installation Space

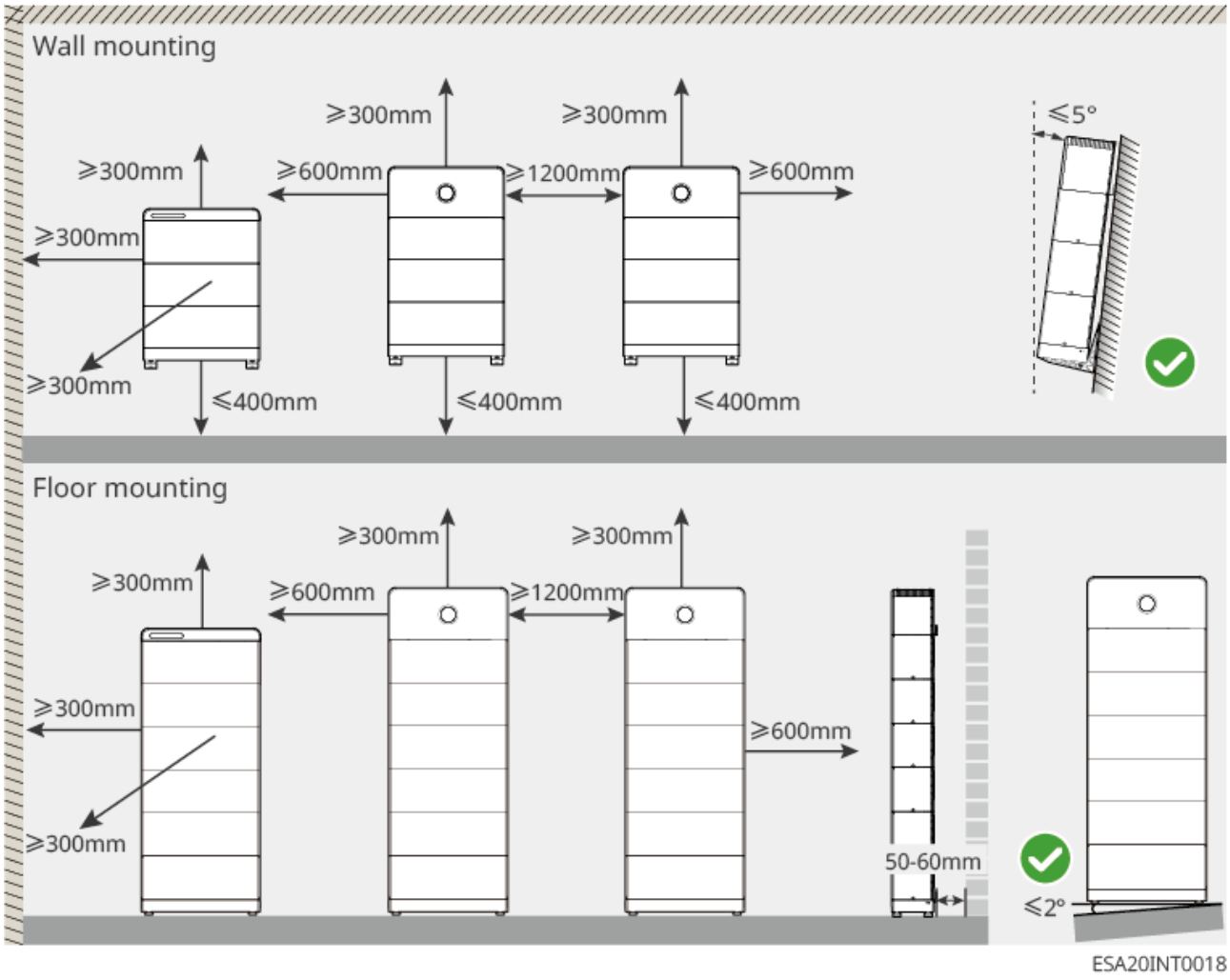

4.1.3 Tool Requirements

NOTICE
During installation, it is recommended to use the following installation tools. If necessary, other auxiliary tools may be used on-site.

Installation Tools

Tool Type	Description	Tool Type	Description
	diagonal plier		RJ45 connector crimping tool

Tool Type	Description	Tool Type	Description
	wire stripper		Level bar
	open-end wrench	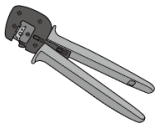	PV terminal crimping tool PV-CZM-61100
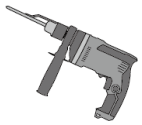	hammer drill (drill bit Φ12mm)	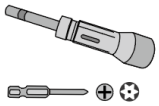	torque wrench M4, M5, M6, M10
	rubber hammer		socket wrench
	marker pen	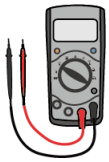	multimeter Range ≤ 1000V
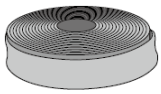	heat shrink tubing		heat gun
	cable tie		vacuum cleaner

Personal Protective Equipment

Tool Type	Description	Tool Type	Description
	Insulated gloves, protective gloves	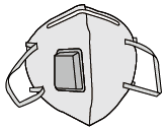	Dust mask

Tool Type	Description	Tool Type	Description
	goggle		Safety shoes

4.2 Equipment Handling

⚠CAUTION

- During transportation, handling, Installation, and other operations, it must comply with the laws, regulations, and relevant standards of the country or region where it is located.
- Before Installation, it is necessary to move Equipment Handling to Installation. To prevent personal injury or equipment damage during the transportation process, please NOTICE the following matters:
  1. Please equip the corresponding personnel according to the Weight to prevent the equipment from exceeding the Weight range that can be manually handled, thereby avoiding injury to personnel.
  2. Please wear safety gloves to avoid injury.
  3. Please ensure the equipment remains balanced during transportation to avoid falling.
  4. Battery system can be transported by hoisting to the Installation location.
  5. When lifting and moving equipment using a hoisting method, please use flexible slings or straps. The load-bearing capacity of a single strap must meet the following requirements:
     - GW5.1-BAT-D-G20，GW5.1-BAT-D-G21，GW6.0-BAT-D-G20 ⩾185KG
     - GW8.3-BAT-D-G20，GW8.3-BAT-D-G21，GW9.0-BAT-D-G20 ⩾240KG

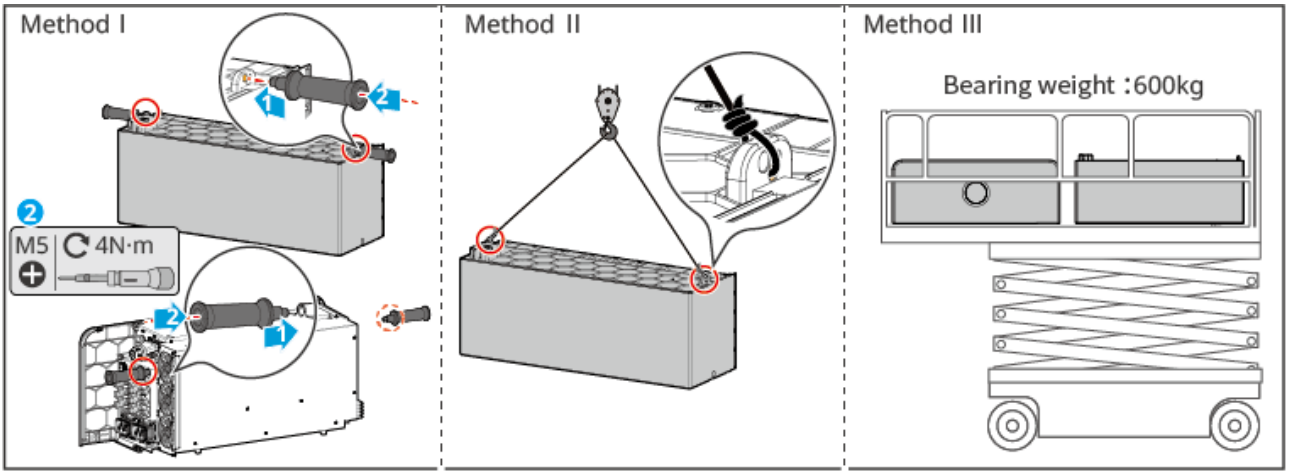

ESA20INT0013

4.3 Installation equipment

⚠CAUTION

- When drilling, ensure the hole position avoids water pipes, cables, etc. inside the wall to prevent DANGER.
- When drilling, wear goggle and a dust mask to prevent dust from inhalation entering the respiratory tract or falling into the eyes.
- Inverter is located above Battery. Do not place Battery Installation above Inverter.
- When Battery system Installation, ensure that the Installation is level and secure. When placing the Battery Base, Battery, and Inverter, confirm that the holes on the upper and lower layers are aligned. The locking bracket should be vertically flush with the ground, wall, or Battery system surface.
- When using hammer drill for punching, it is necessary to cover the Battery system with cardboard or other protective materials to prevent foreign objects from entering the equipment and causing damage.
- When mounting Installation on the wall, ensure to evaluate the wall's load-bearing capacity for the safety of life and property.

NOTICE

- Battery needs to be installed on Base, and Base can be placed on the ground Installation or mounted on the bracket Installation.
- When placed on the ground Installation, a maximum of 4 Battery units can be stacked away from the wall, while a maximum of 6 Battery units can be stacked against the wall.
- The maximum stacking quantity when using the bracket Installation is specified as follows:
  - Same energy stacking
    - GW5.1-BAT-D-G20 , GW5.1-BAT-D-G21Maximum 3 Block.
    - GW8.3-BAT-D-G20 , GW8.3-BAT-D-G21Maximum 2 Block.
    - GW6.0-BAT-D-G20: Maximum 3 units.
    - GW9.0-BAT-D-G20: Maximum of 2 units.
  - Different energy aliasing
    - When GW5.1-BAT-D-G20, GW5.1-BAT-D-G21, and GW6.0-BAT-D-G20 are mixed in stacking, the system supports a maximum of 3 blocks per single group.
    - GW8.3-BAT-D-G20, GW8.3-BAT-D-G21, GW9.0-BAT-D-G20, and models compatible for hybrid stacking with themThe system supports a maximum of single group 2 Block.
- When mounted against a wall, the bracket and the topmost Battery must be secured to the wall surface using locking bracket.
- BracketInstallationWhen marking the drilling positions, have one person hold the Base steady while another uses a marker to mark the drilling locations.
- When Installing the Battery System and Inverter, remove the protective cover from the blind-mate connector before stacking.

Wall-mounted Installation

Step 1: Mount the Base Installation on the bracket.

Step 2: The bracket should be tightly attached to the wall. Ensure the bracket is securely placed and observe the level bubble in the center of the Base.

Step 3: After adjusting the position and levelness of the mounting bracket, use a marker to mark the drilling positions. Once marked, remove the bracket. (A: PACKfixing hole position; B: Bracketfixing hole position.)

Step 4: Punch holes and InstallationExpansion screw.

1. Use a hammer drill for punching holes.
2. Clean the holes.
3. Use rubber hammer to insert Expansion screw Installation into the hole.
4. Use a hex wrench to tighten nut clockwise, causing screw to expand.
5. Rotate the nut counterclockwise to remove.
6. Use torque screwdriver to fasten locking bracket to the wall.

Step 5: Use a hex wrench to secure the bracket to the wall.

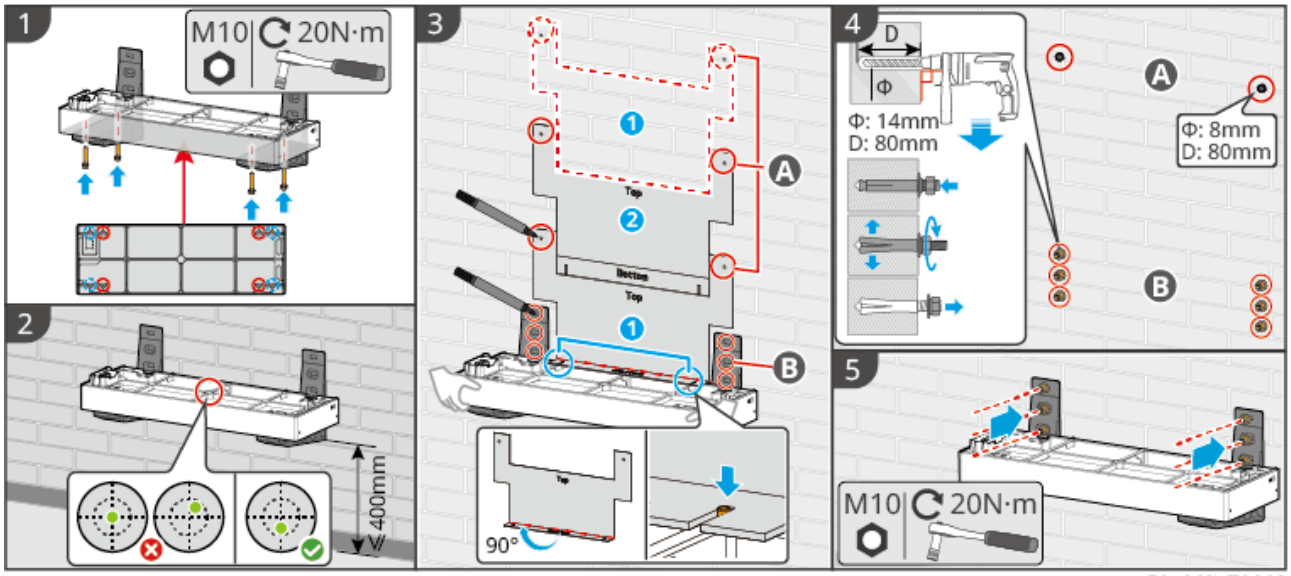

ESA20INT0003

ground-mounted Installation

Wall-mounted Installation

Step 1: Adjust the adjustable feet Installation at the bottom of Base, and secure the locking bracket onto the Base.

Step 2: Place the Base at a distance of 50-60 cm from the wall.mmPlace it parallel to the wall. Observe the level bubble in the center of the Base. If the bubble is not centered, use the adjustable feet to level it.

Step 3: After adjusting the position and level of Base, use a drilling template to mark the drilling positions. Once marked, remove the Base. (A: PACK fixing hole position; B: Bracket fixing hole position.)

Step 4: Use hammer drill for drilling and clean the holes.

Step 5: Secure the locking bracket to the wall using cross screwdriver fasteners.

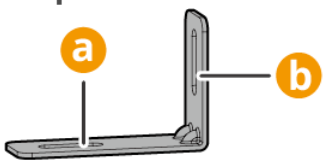

a: Fixed surface with Base; b: Fixed surface with wall.

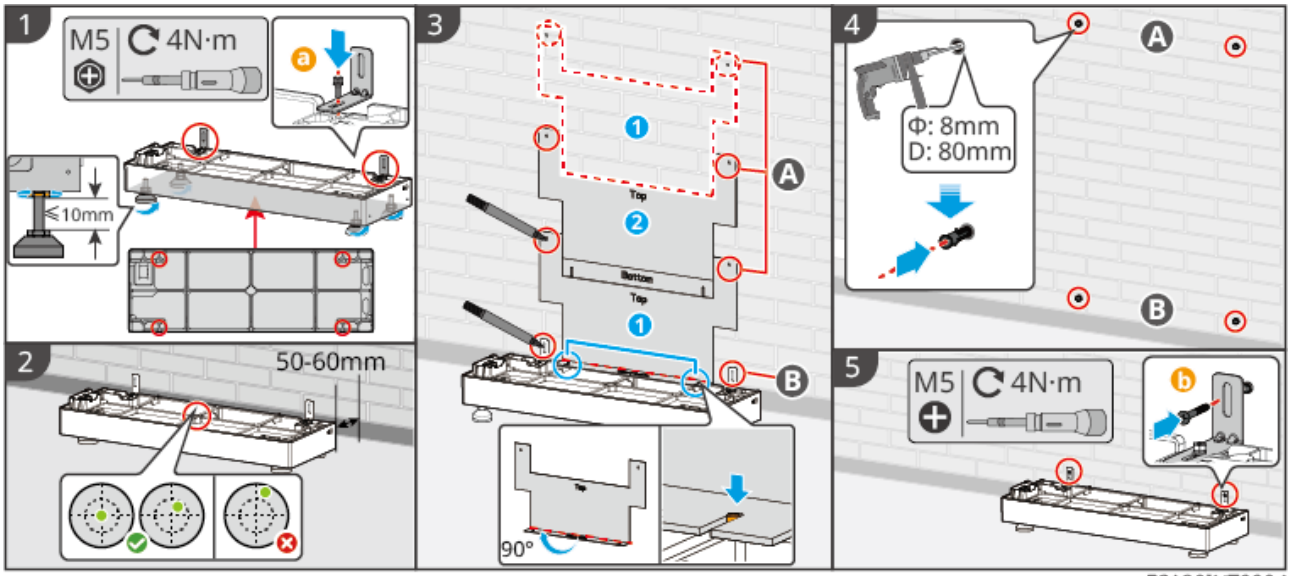

ESA20INT0004

Off-wall Installation

Step 1: Place the adjustable feet Installation at the bottom of Base. Observe the level bubble in the center of Base. If the bubble is not centered, use the adjustable feet to level it.

Step 2: After adjusting the position and level of the Base, secure the wall-mounted Installation bracket to the Base. Select an appropriate location to mark the drilling positions, then remove the Base once marking is complete.

Step 3: Drill holes and InstallationExpansion screw.

1. Use hammer drill for punching.
2. Clean the holes.
3. Use rubber hammer to insert Expansion screw Installation into the hole.
4. Use a hex wrench to tighten nut clockwise to expand screw.
5. Rotate the nut counterclockwise to remove.
6. Use torque screwdriver to secure the anti-wall bracket to the ground.

Step 4: Use a hex wrench to secure the Base to the ground.

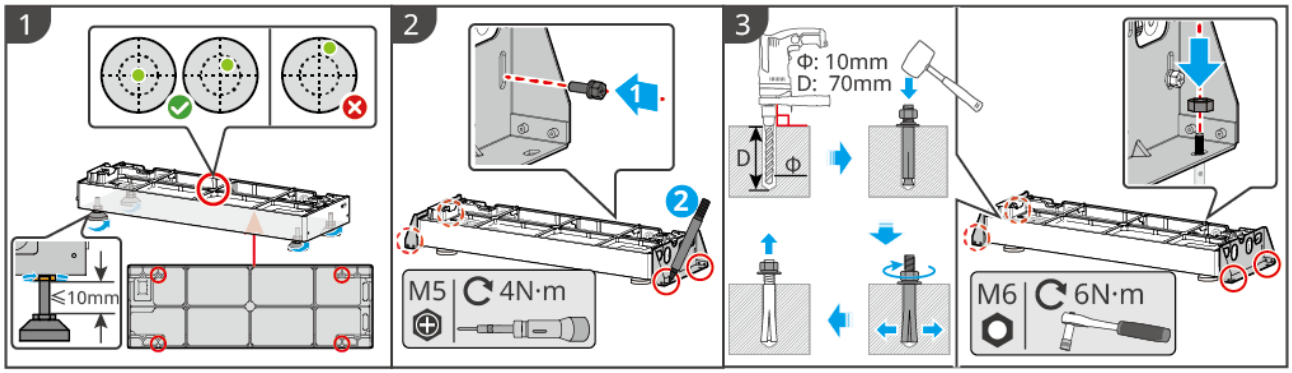

ESA20INT0015

Installing the Battery System and Inverter

NOTICE
When installed against a wall, the topmost Battery must be secured to the wall using locking bracket.

Step 1:dismantle Inverter or the protective cover on the bottom blind-mate connector of Battery.
Step 2: Installation Handle (optional), stack Battery onto Base.
If the number of Installation exceeds 3 Battery, lifting equipment must be used.
Step 3: Tighten the screw between Battery and Base, or between Battery and Battery.
If multiple Battery are required for Installation, please repeat.**Step1**、**Step2**Complete all BatteryInstallation,Battery stacking quantities follow "2.2.1.System Overall Configuration Description(Page 39)".
Step 4:(Optional) The topmost Battery is secured to the wall using locking bracket.
Step 5: Installing the Inverter or Battery decorative cover.

- Integrated Installation: Lift the Inverter, align it, and stack it on top of the Battery, then fasten the screw between the Inverter and Battery. If the system is in an integrated configuration, the Installation is now complete.
- Split-type expansion: Repeat the steps of Installing the Battery System. After completing the electrical connections, place the Battery decorative cover on top of the Battery and secure the side screw.

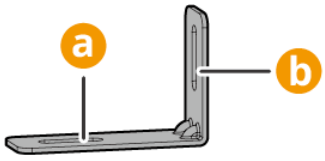

a: Fixed surface with PACK; b: Fixed surface with wall.

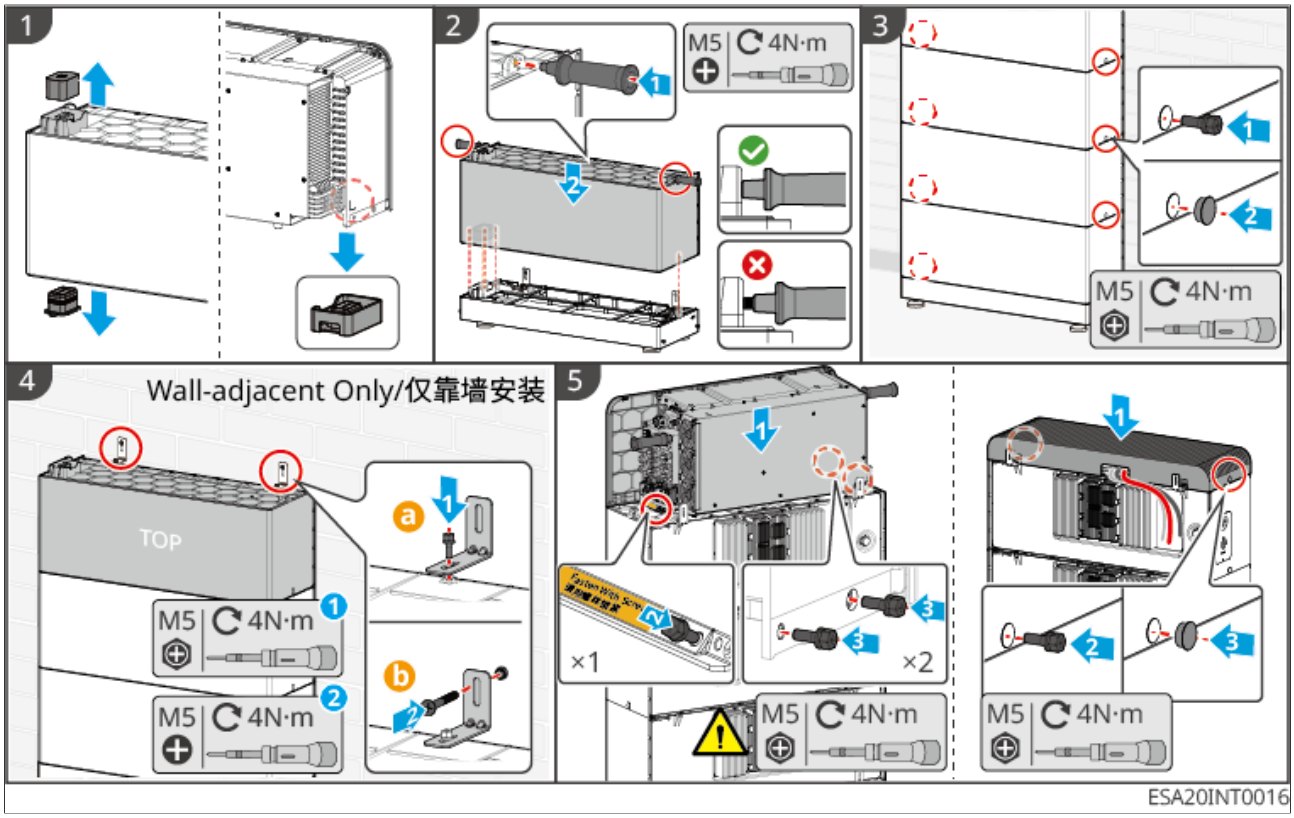

4.4 Installing the Smart Meter

⚠WARNING

In areas with lightning DANGER, if the meter cable length exceeds 10m and the cable is not routed with grounding Steel conduit, it is recommended to install external lightning protection devices.

GM330&GMK330

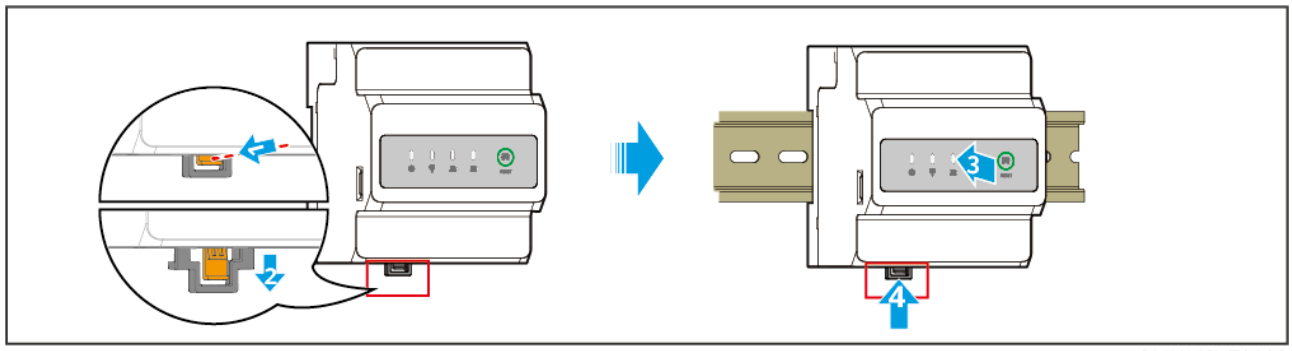

Step 1: Pull out the buckle at the bottom of the electricity meter.

Step 2: Place the meter on the positioning track and reinstall the buckle onto the meter.

5 System Wirings

⚠DANGER

- The installation, routing, and connection of cables must comply with local laws, regulations, and code requirements.
- All operations during electrical connection, as well as the specifications of cables and components used, must meet local legal and regulatory requirements.
- Before performing electrical connections, disconnect the DC switch and AC output switch of the equipment to ensure it is powered off. Live working is strictly prohibited, as it may lead to hazards such as electric shock.
- Cables of the same type should be bundled together and arranged separately from different types of cables. Intertwining or cross-routing is prohibited.
- If cables are subjected to excessive tension, poor connections may result. During wiring, leave a certain length of cable slack before connecting to the inverter terminals.
- When crimping terminals, ensure the conductor part of the cable makes full contact with the terminal. Do not crimp the cable insulation together with the terminal, as this may cause the equipment to malfunction, or lead to overheating and damage to the inverter terminal block due to unreliable connections during operation.
- The inverter is not tested to AS/NZS 4777.2:2020 for combinations and/or multiple phase inverter combinations so that combpinations should not be used.
- Unused cable entry holes and ports (including communication ports) must be reliably sealed using the dedicated terminal blocks or plugs provided in the accessory kit. Failure to do so may result in the following risks:
  - Electric Shock Hazard: Open electrical ports may allow direct contact with live parts, leading to electric shock accidents.
  - Protection Failure: Open ports can allow dust, moisture, or foreign objects to enter, potentially causing short circuits, fires, or equipment failure.

NOTICE

- When performing electrical connections, wear personal protective equipment such as safety shoes, protective gloves, and insulating gloves as required.
- Only qualified personnel are permitted to perform electrical connection operations.
- The cable colors shown in the graphics in this document are for reference only. Actual cable specifications must comply with local regulations.

5.1 System Wiring Electrical Block Diagram

NOTICE

- According to the regulatory requirements of different regions, the wiring methods for the N and PE lines of the inverter GRID and BACK-UP ports are different. Please refer to local regulations for specifics.
- The inverter has a built-in meter and can be directly connected to the CT for use. The CT network cable shipped with the box is 10 meters. If a longer distance is required, it can be extended to 30 meters using shielded network cable of CAT5E or above.
- When the connection length between the CT and the inverter exceeds 30m, accuracy will decrease. If high precision is required, an external smart meter can be connected.
- The inverter GRID AC port has a built-in relay. When the inverter is in off-grid mode, the built-in GRID relay is in the open state; when the inverter is in grid-connected operation mode, the built-in GRID relay is in the closed state.
- After the inverter is powered on, the BACK-UP AC port is live. If maintenance is required on the BACK-UP Loads, please power off the inverter; otherwise, it may cause electric shock.
- In whole-house backup scenarios, if the total power of the connected loads exceeds 1.1 times the rated power of the inverter, after a grid power outage, the inverter will stop output due to overload protection. At this time, please turn off some non-essential loads to ensure that the total load power is less than 1.1 times the rated power of the inverter.

N and PE wires are connected together in the distribution box.

NOTICE

- To maintain neutral integrity, the neutral wires on the grid side and the off-grid side must be connected together; otherwise, the off-grid function will not operate correctly.
- The diagram below illustrates the grid system for regions such as Australia and New Zealand:

Whole house backup power

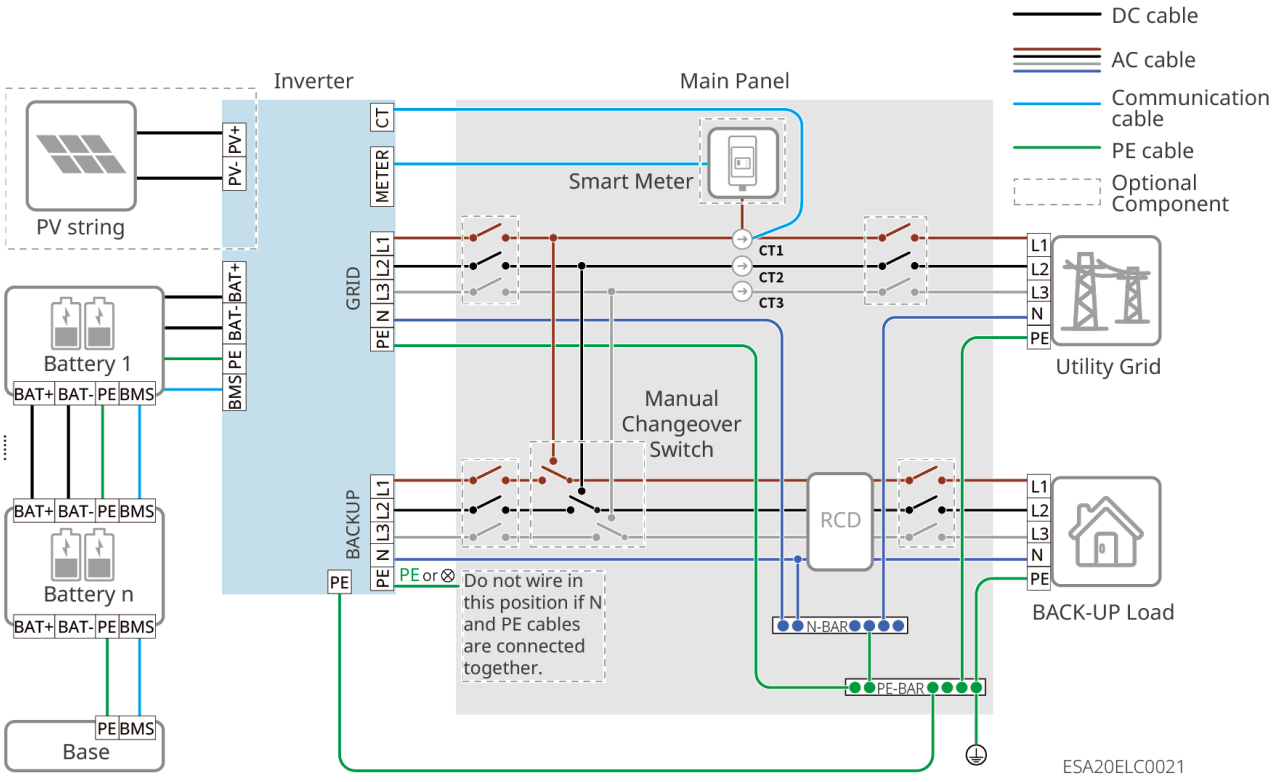

Partial backup power

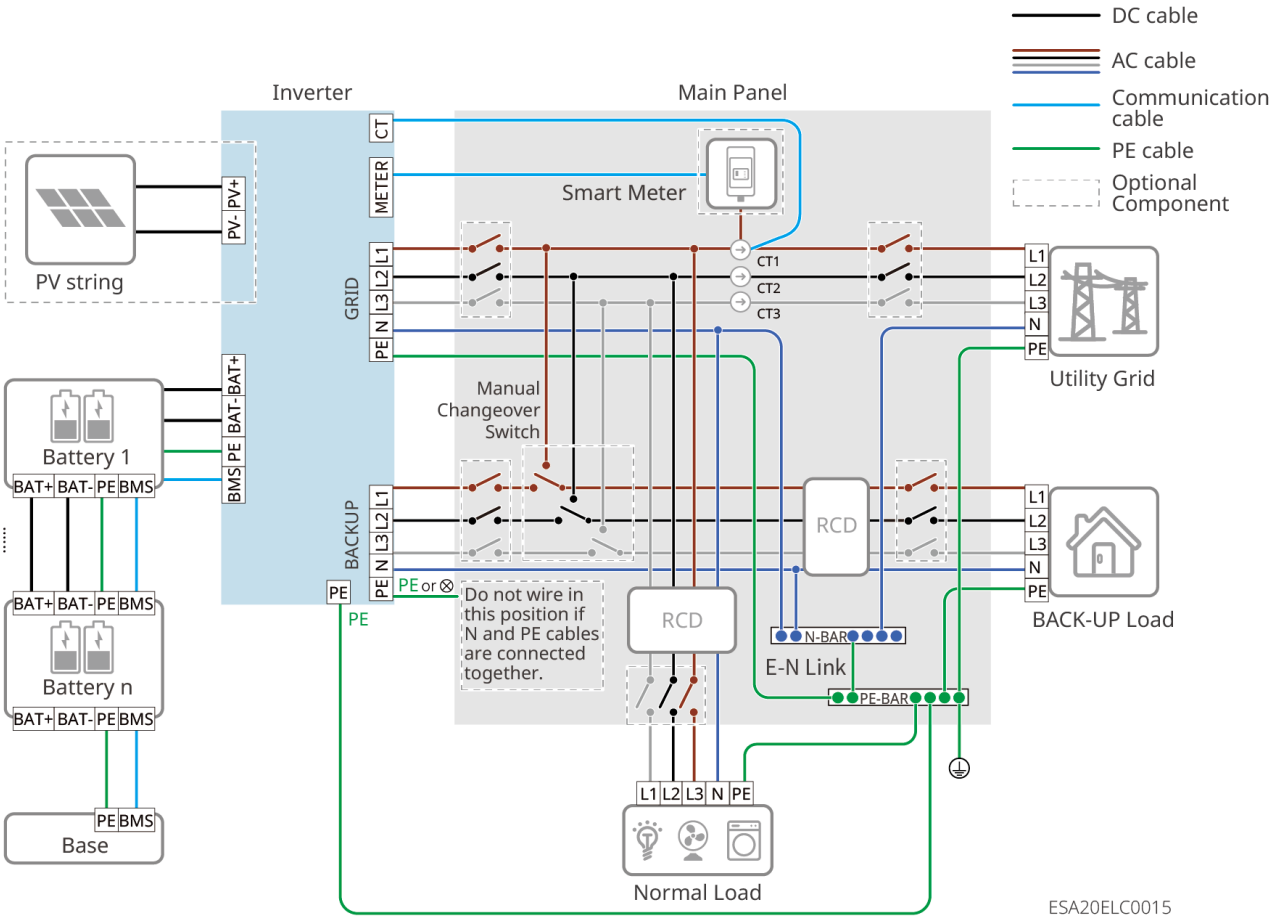

NandPE wires are separately wired in the distribution box.

NOTICE

- Ensure the protective ground wire for the BACK-UP is correctly and securely connected; otherwise, the BACK-UP function may operate abnormally in the event of a grid fault.
- In a parallel system, do not install Residual Current Devices (RCDs) on the grid-connected branch of each inverter. RCDs should be installed uniformly at the grid aggregation point.
- The following wiring method applies to regions other than Australia, New Zealand, etc.:

Whole house backup power

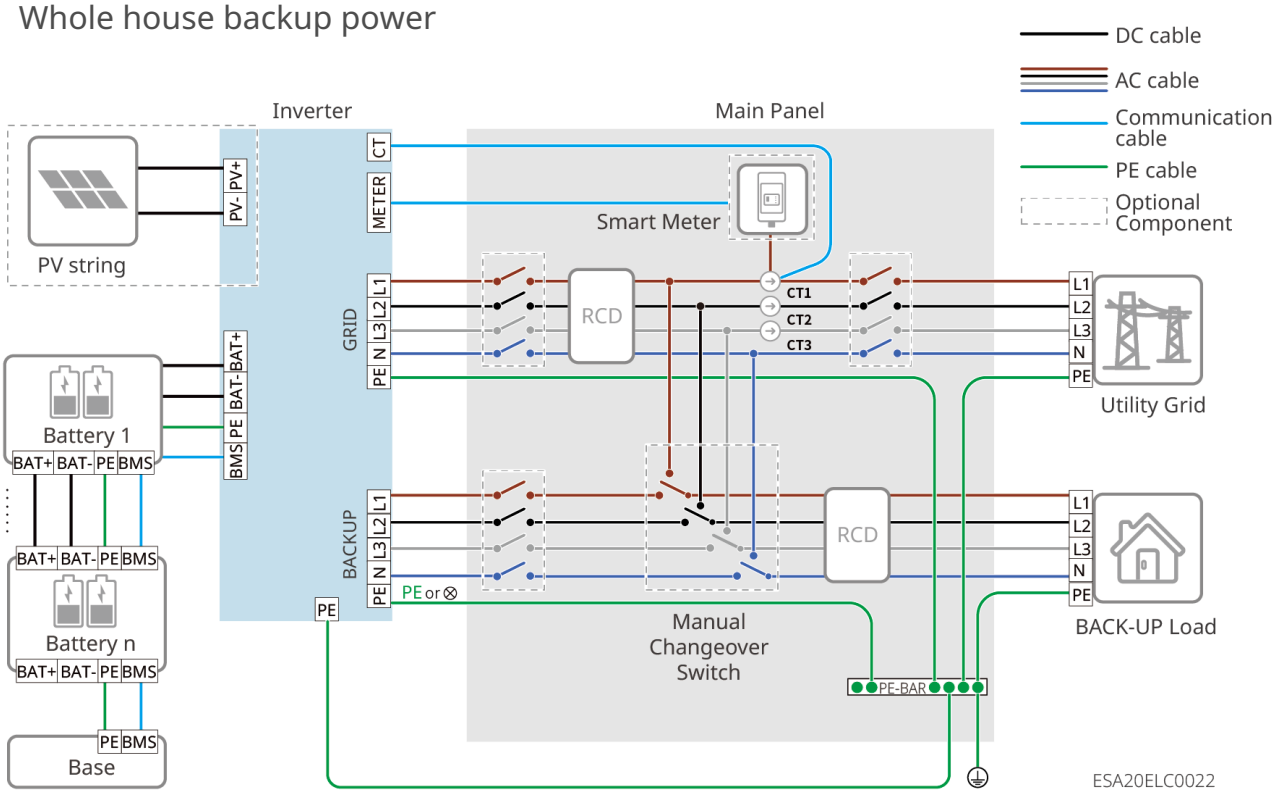

Partial backup power

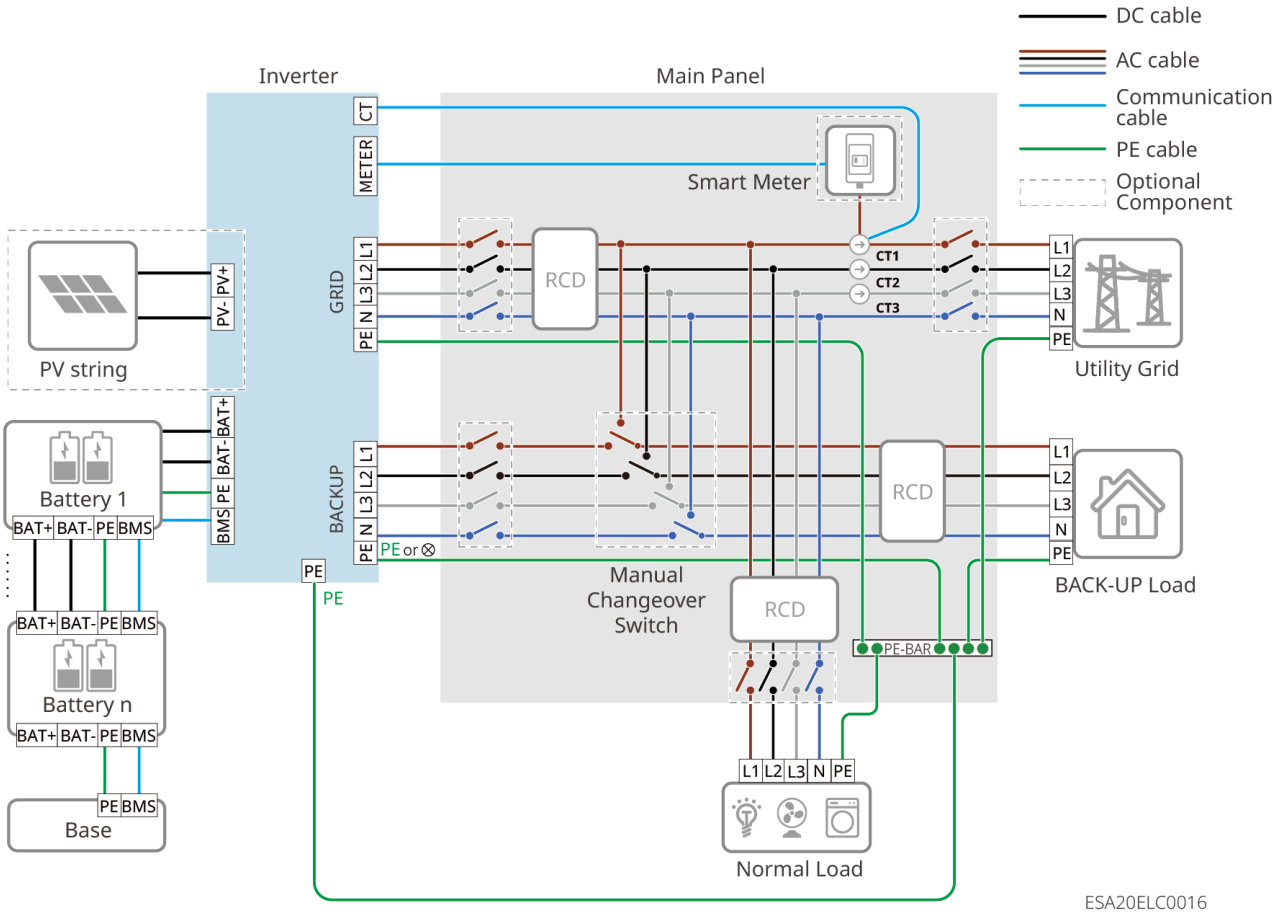

5.2 Detailed System Wiring Diagram

When all loads in the photovoltaic system cannot consume the electricity generated by the system, the surplus electricity is fed into the grid. At this time, it can be paired with a smart meter or CT to monitor the system's power generation and control the amount of electricity fed into the grid.

- Connecting a smart meter enables output power limiting and load monitoring functions.
- After connecting the smart meter, please enable the 'Export power limit' function via the SEMS+ App.

The detailed system wiring diagram only shows wiring examples for some model devices. Please refer to the corresponding wiring guidance chapter based on the actual devices used for wiring.

⚠WARNING

The common contact of the manual transfer switch must be connected to the BACK-UP load side of the Inverter, and must not be connected to the GRID utility side. If connected to the GRID utility side, the Inverter's off-grid mode and bypass mode will run simultaneously. When a utility power outage occurs, the distribution cabinet connected to the Inverter's GRID port will still have high voltage, posing a risk of electric shock.

Australia Region

NOTICE

In Australia, a 3-pole manual transfer switch is included in the product shipping box. If required for use, please wire it according to the 3-pole manual transfer switch wiring method shown in the wiring diagram below.

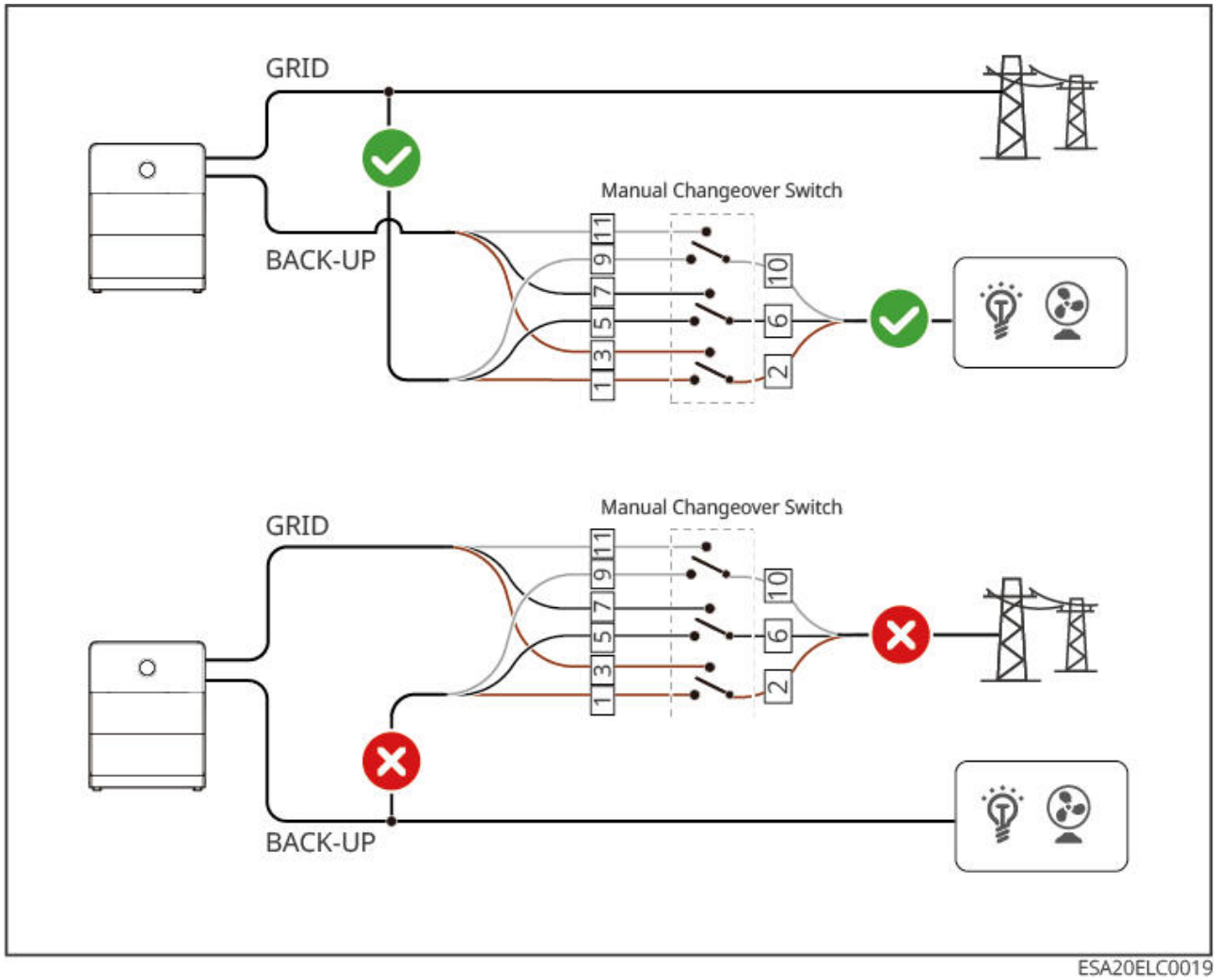

ESA20ELC0019

Europe Region

NOTICE

In the European region, if a manual transfer switch is required, please purchase a 4-pole manual transfer switch through a distributor or procure it yourself. After obtaining this switch, please wire it according to the 4-pole manual transfer switch wiring method shown in the following wiring diagram.

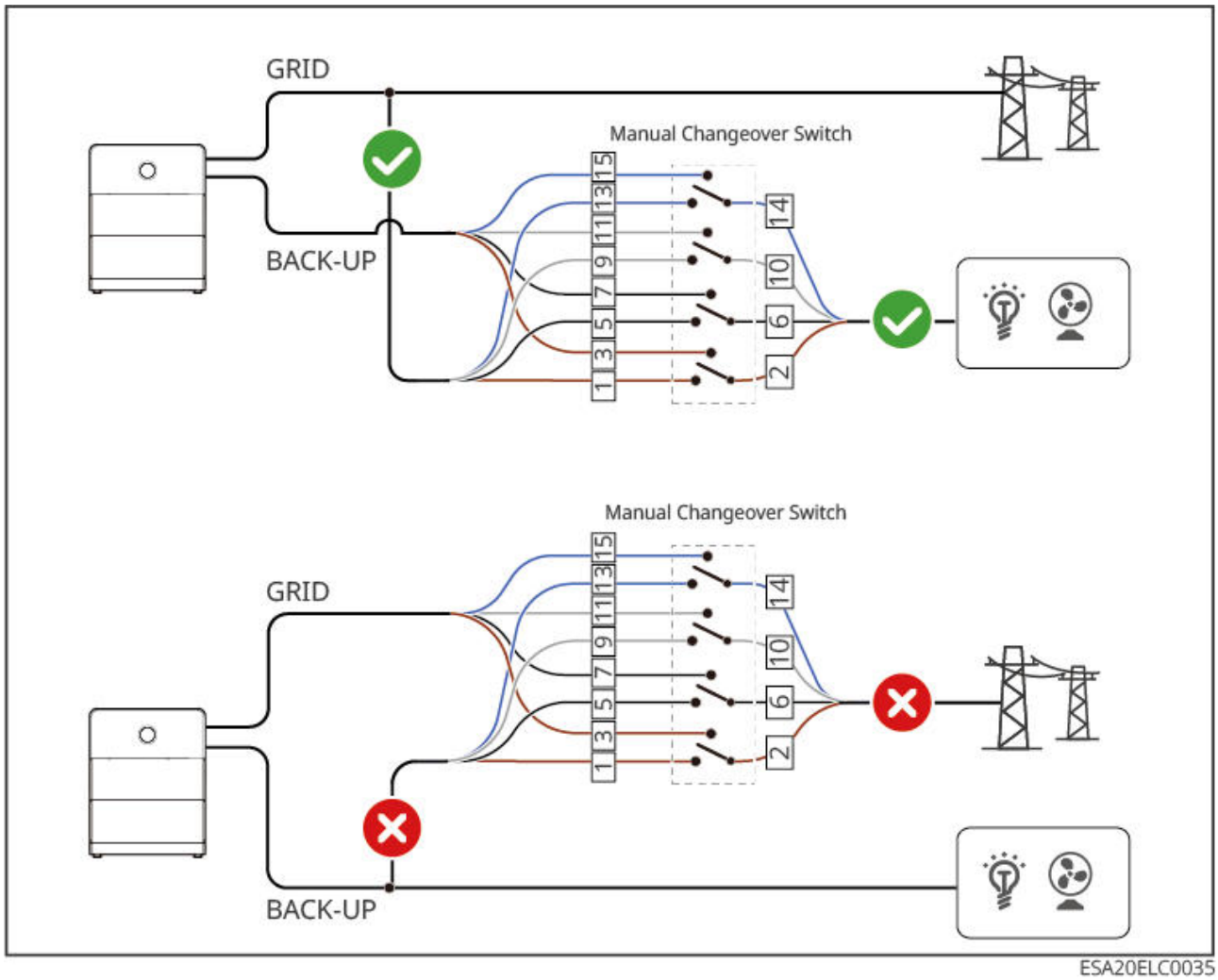

ESA20ELC0035

NOTICE

- For microgrid and coupling scenarios, if grid-tied inverter power generation monitoring and load monitoring functions are required, a dual-meter networking setup must be used.
  - Meter 1 or the built-in meter is used to monitor the system's grid-connected power.
  - Meter 2 is used to monitor the grid-tied inverter's power generation.
  - By integrating data from Meter 1 and Meter 2, the monitoring platform can achieve real-time monitoring of the load's power consumption.
- If output power limitation is required for the grid-tied inverter, please connect separate devices such as a meter or CT.
- For microgrid and coupling scenarios with dual meters, the meter wiring method is the same.
- When not using the inverter's built-in meter, do not connect to the inverter's CT port.
- Parallel operation of energy storage inverters is not supported in microgrid scenarios.
- The manual transfer switch is only supported for use in single-unit scenarios. Please decide whether to install it based on the actual usage scenario; if using a self-provided ATS or STS switch, this switch must have an interlock function.

Dual Meter Configuration Scenarios	
Meter 1 (Grid Side)	Meter 2 (Grid-tied Inverter AC Side)
Built-in Meter	GMK330
Built-in Meter	GM330
GMK330	GMK330
GM330	GM330
GMK330	GM330
GM330	GMK330

5.2.1 Detailed System Wiring Diagram for Single Inverter

Common Scenarios

Scenario with Built-in Meter

Scenarios with a built-in meter do not support connection to a generator.

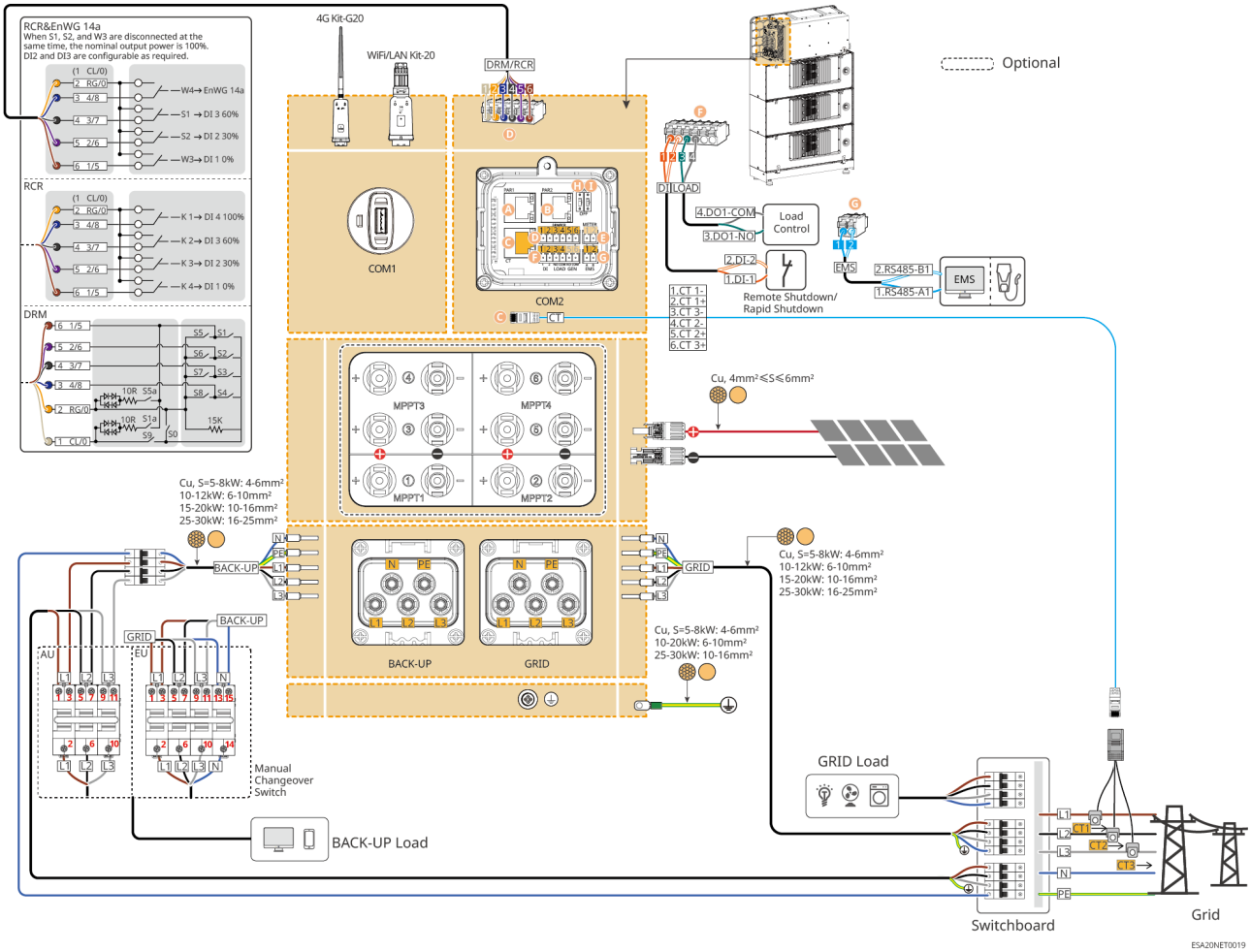

Scenario with GM330 Meter

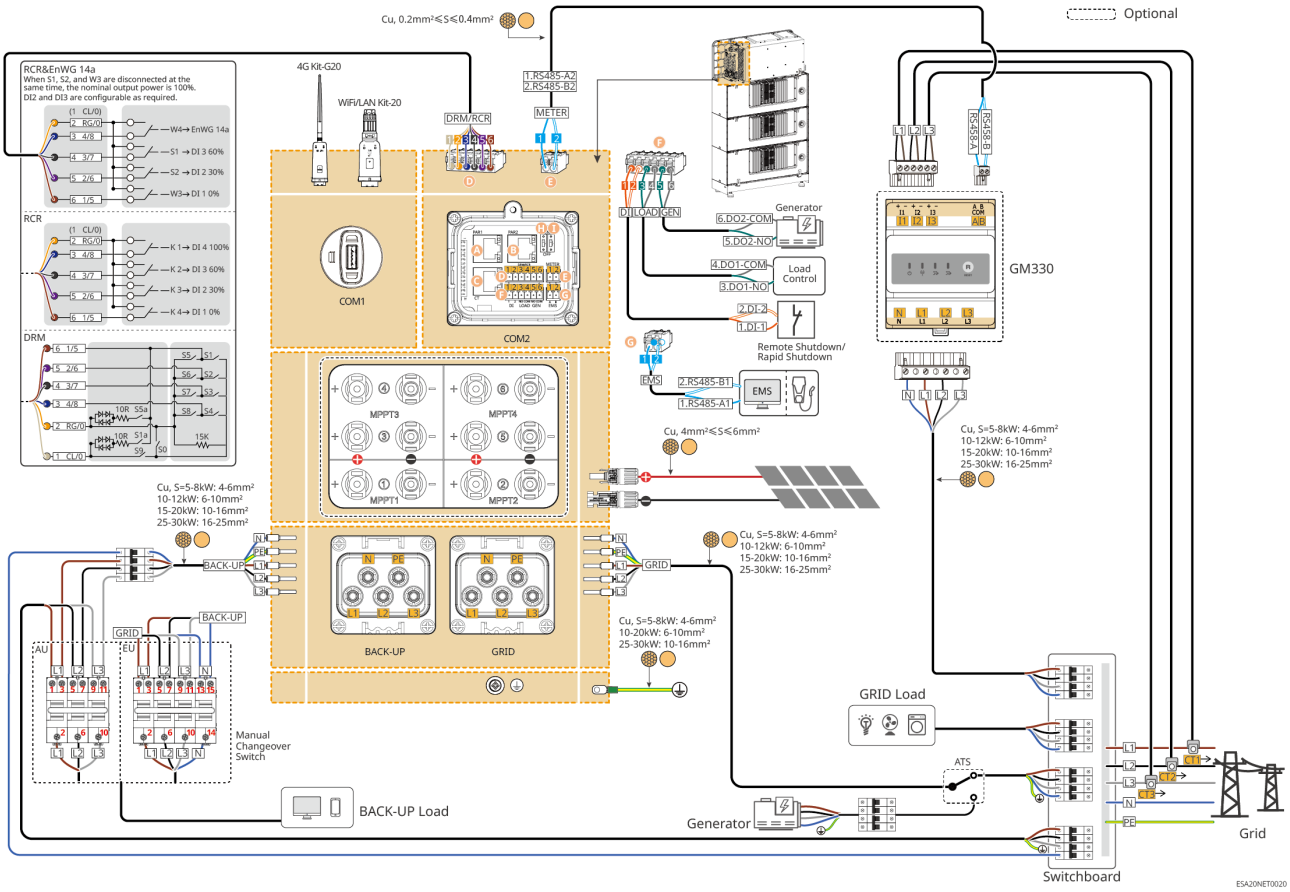

Scenario with GMK330 Meter

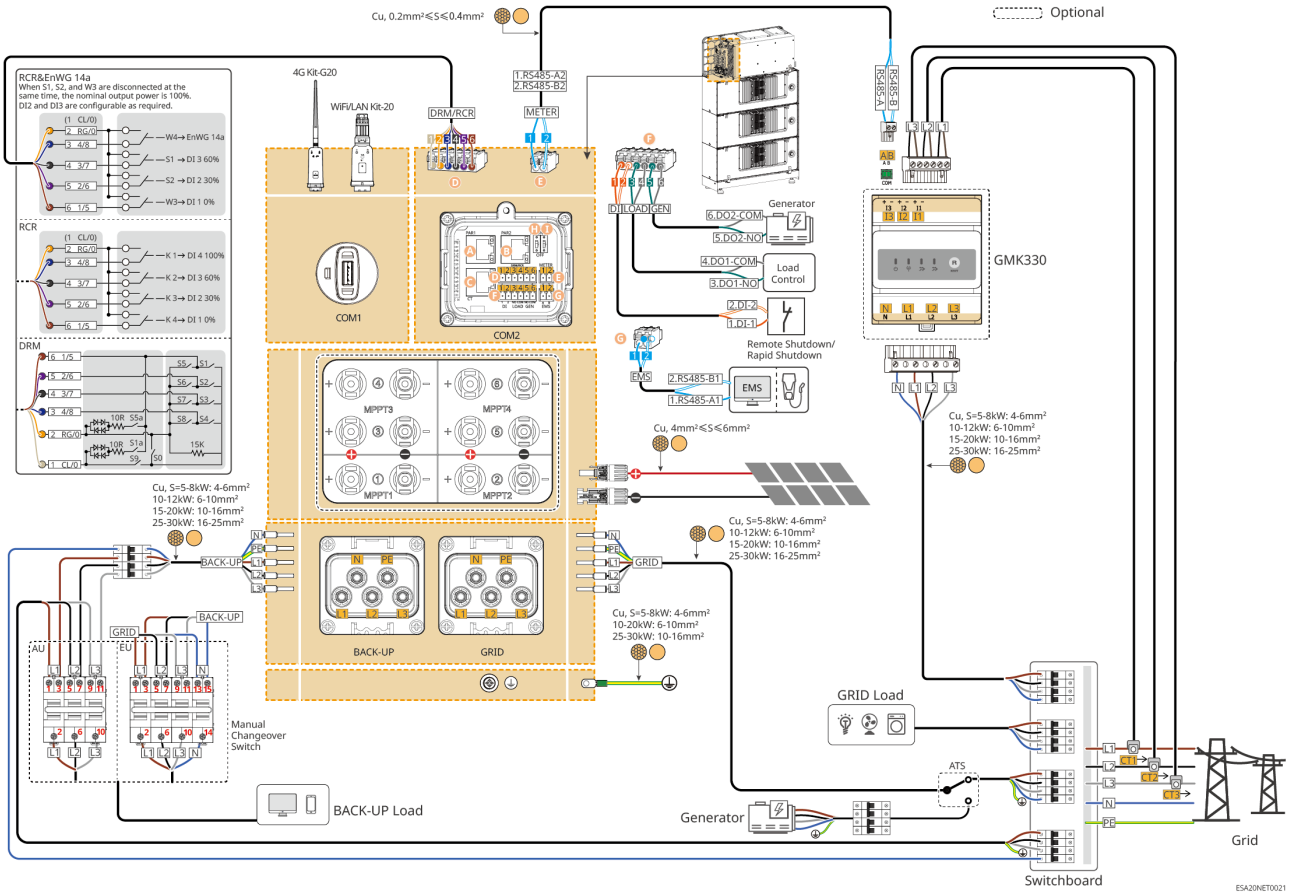

Microgrid Scenario Network Diagram

- Microgrid scenarios do not support connection to a generator.
- Manual transfer switch is optional. Please decide whether to install it based on the actual usage scenario.

Network Diagram with Built-in Meter + GM330 Meter

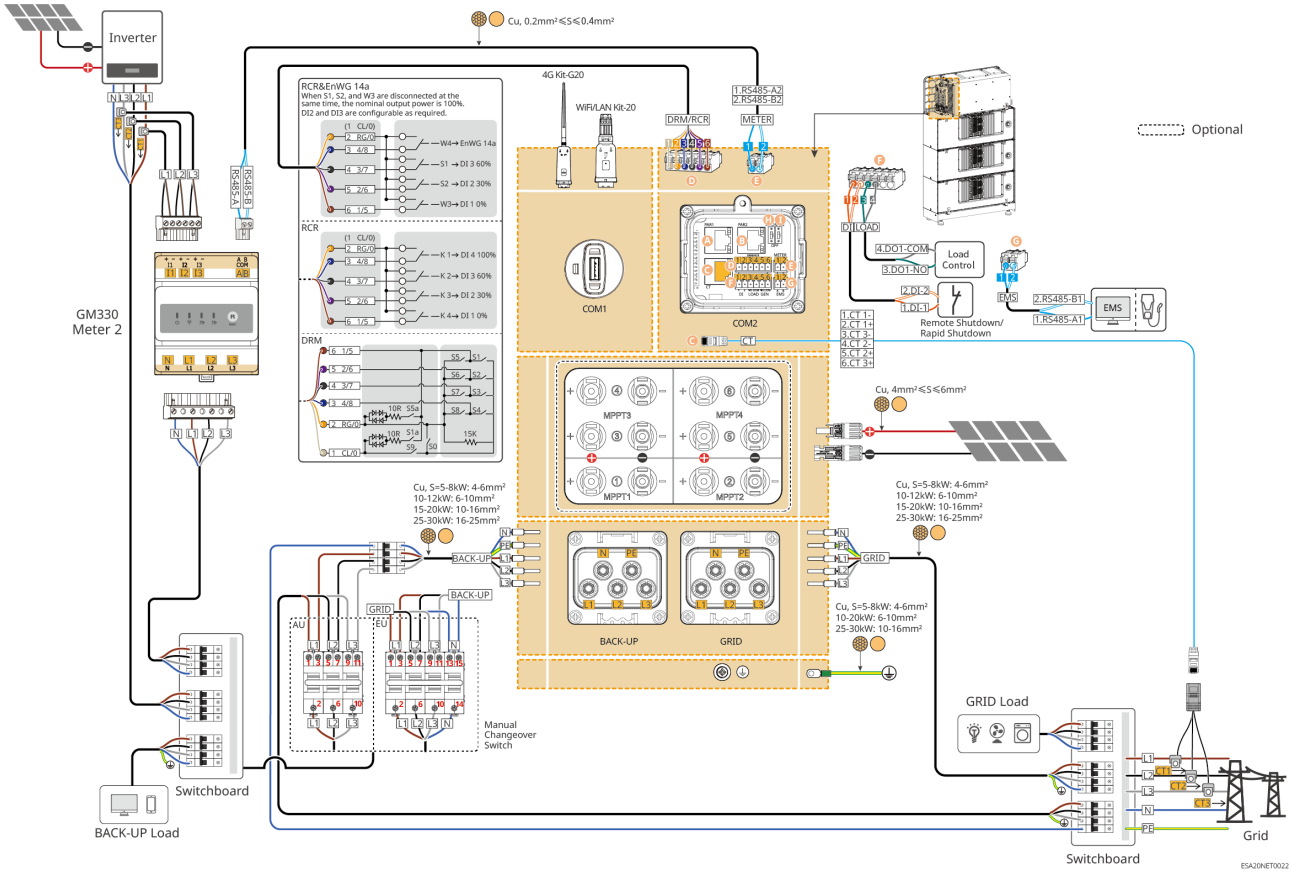

GMK330 + GMK330

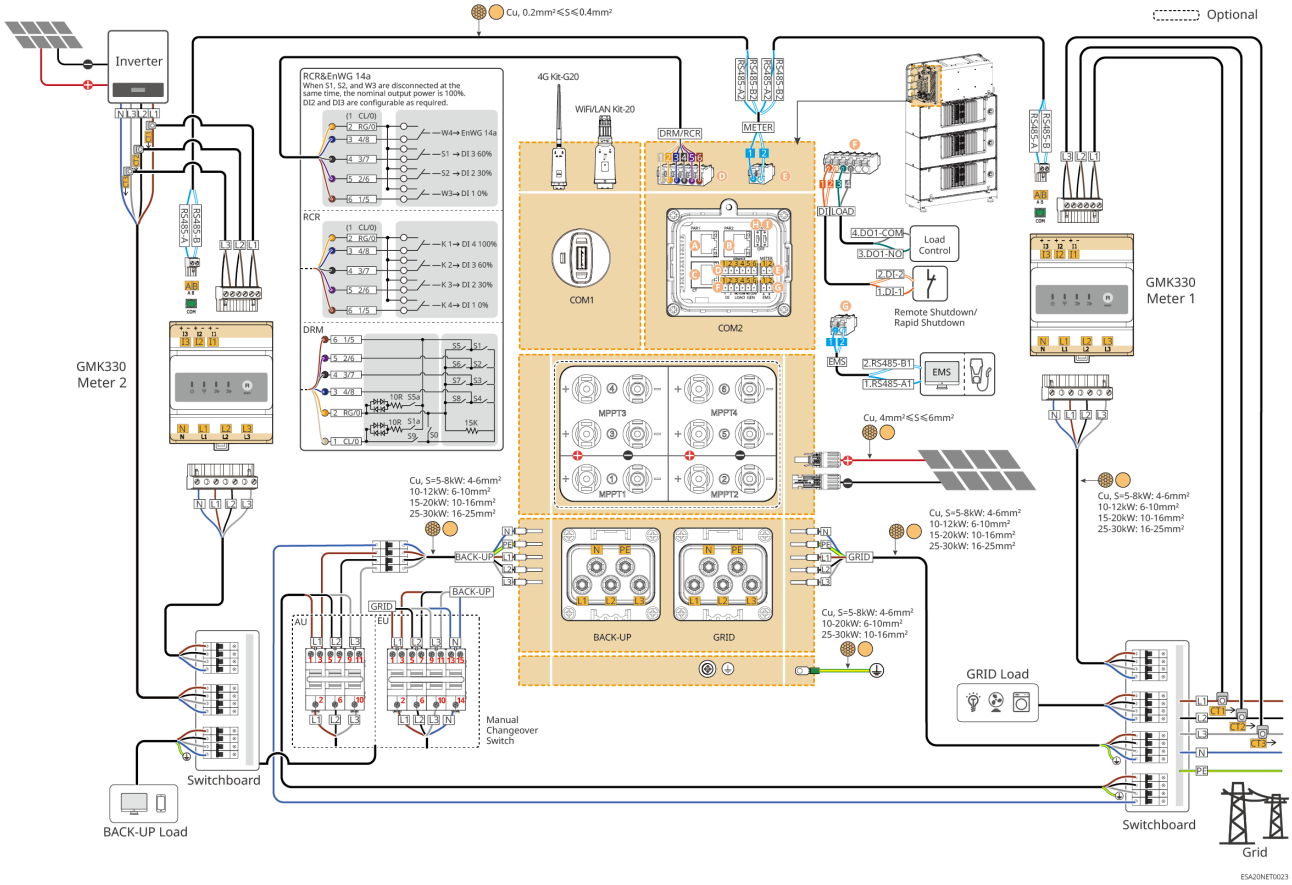

Microgrid Scenario, Grid-tied Inverter Grid Power Limitation Network Diagram

In a Microgrid Scenario, if the grid-tied inverter requires output power limitation, please connect a separate meter or CT device.

GM330 + GMK330

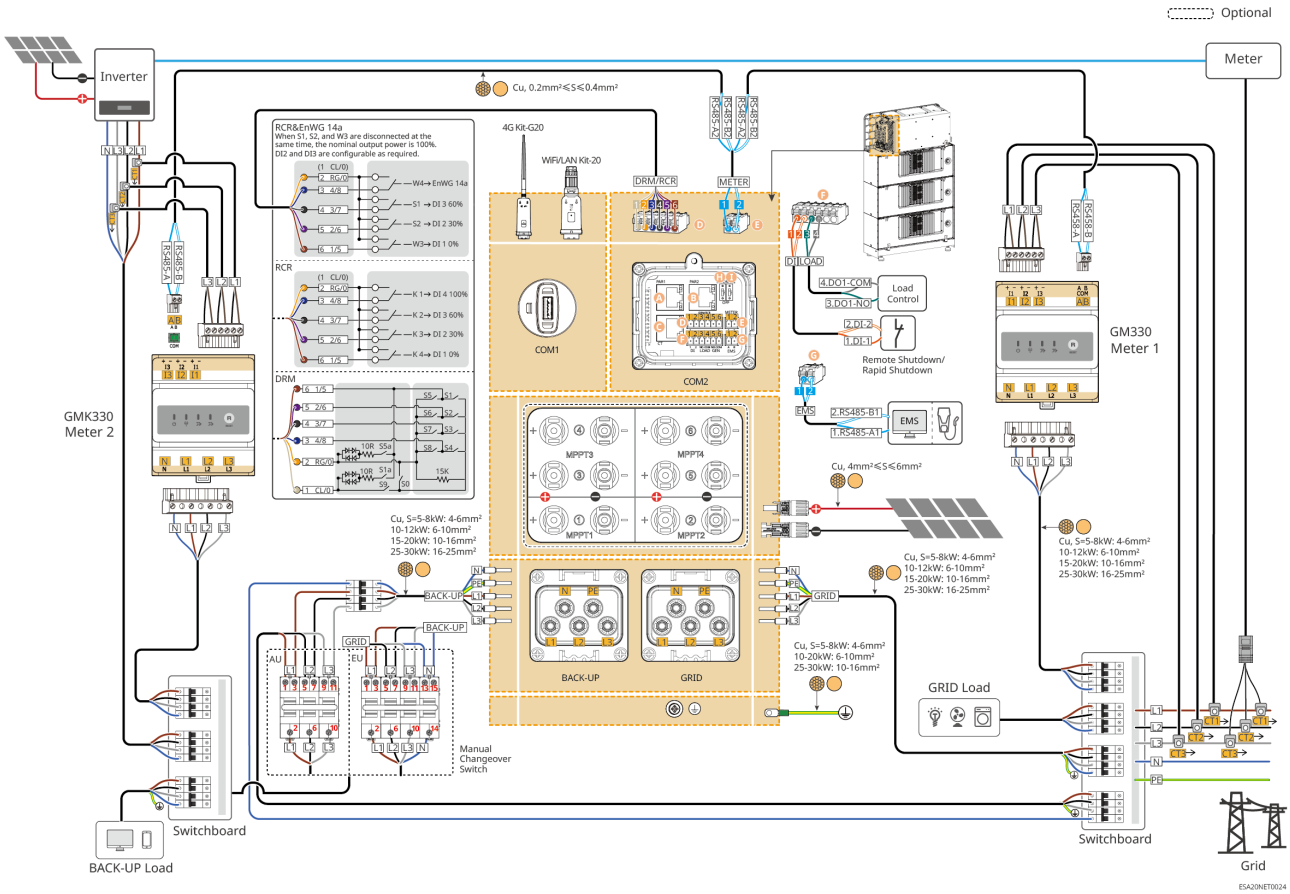

Coupling Scenario Dual Meter Network Diagram

- Manual transfer switch is optional. Please decide whether to install it based on the actual usage scenario.
- Scenarios with a built-in meter do not support connection to a generator.

Built-in Meter + GMK330

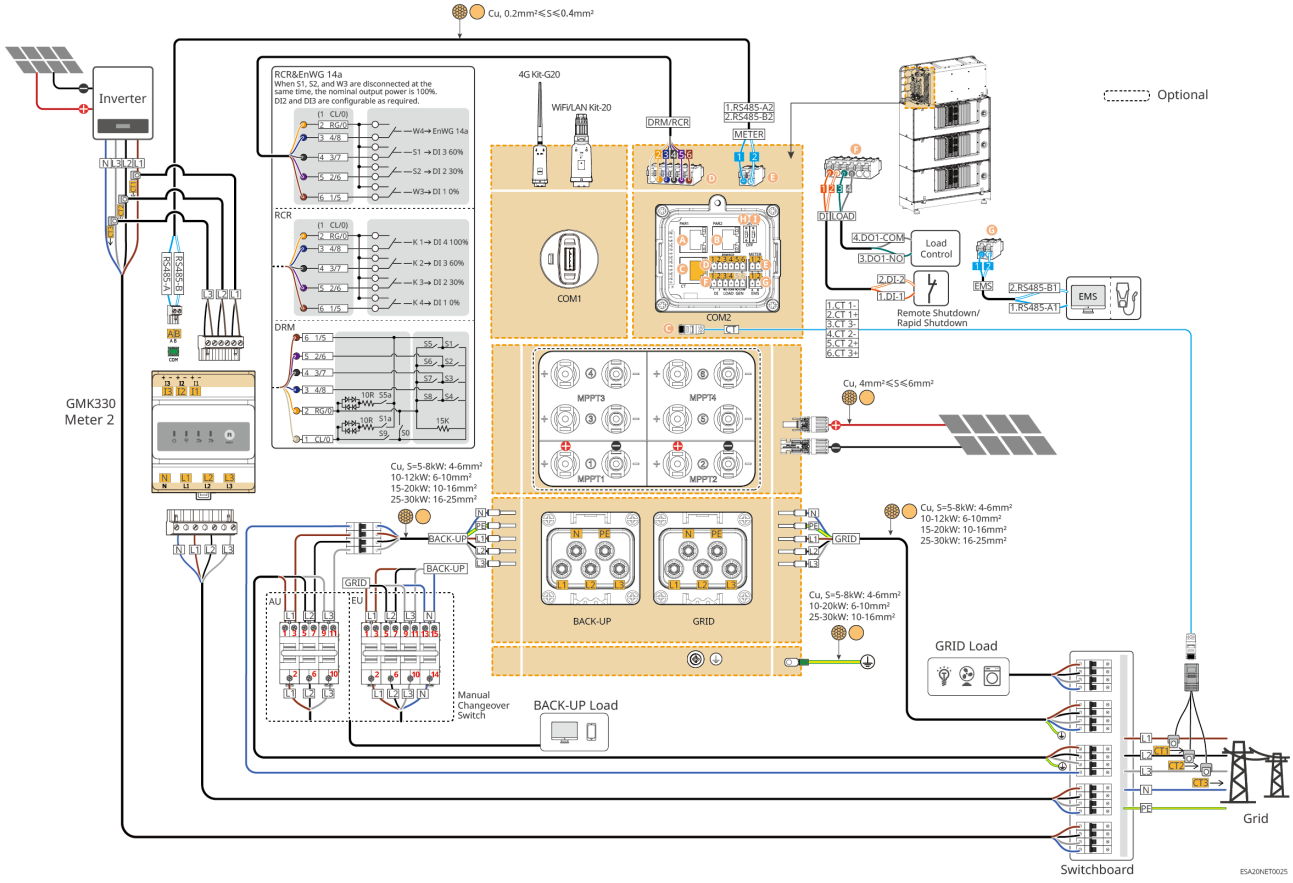

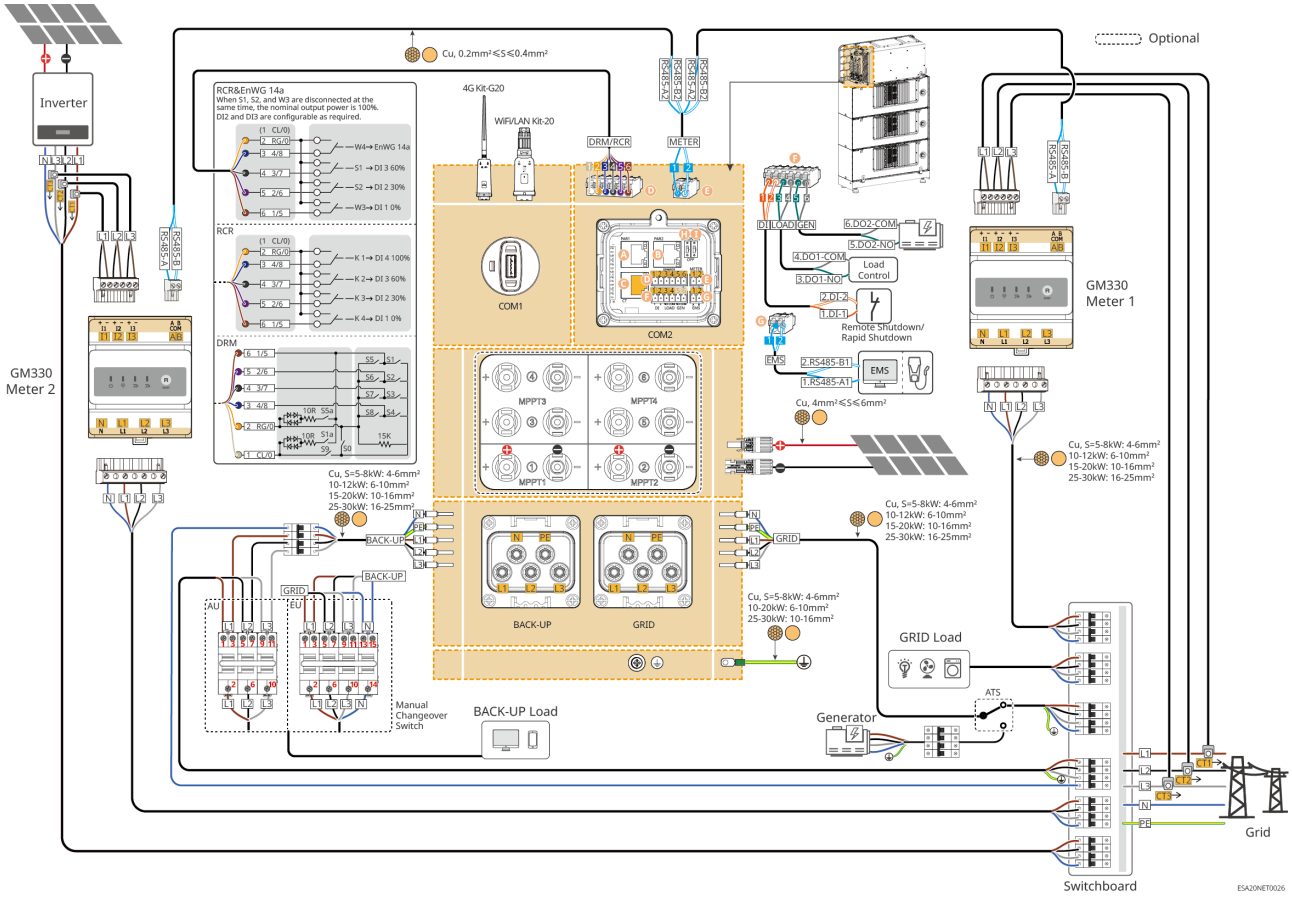

Coupling Scenario, Grid-tied Inverter Grid Power Limitation Network Diagram

In a Coupling Scenario, if the grid-tied inverter requires output power limitation, please connect a separate meter or CT device.

GMK330 + GM330

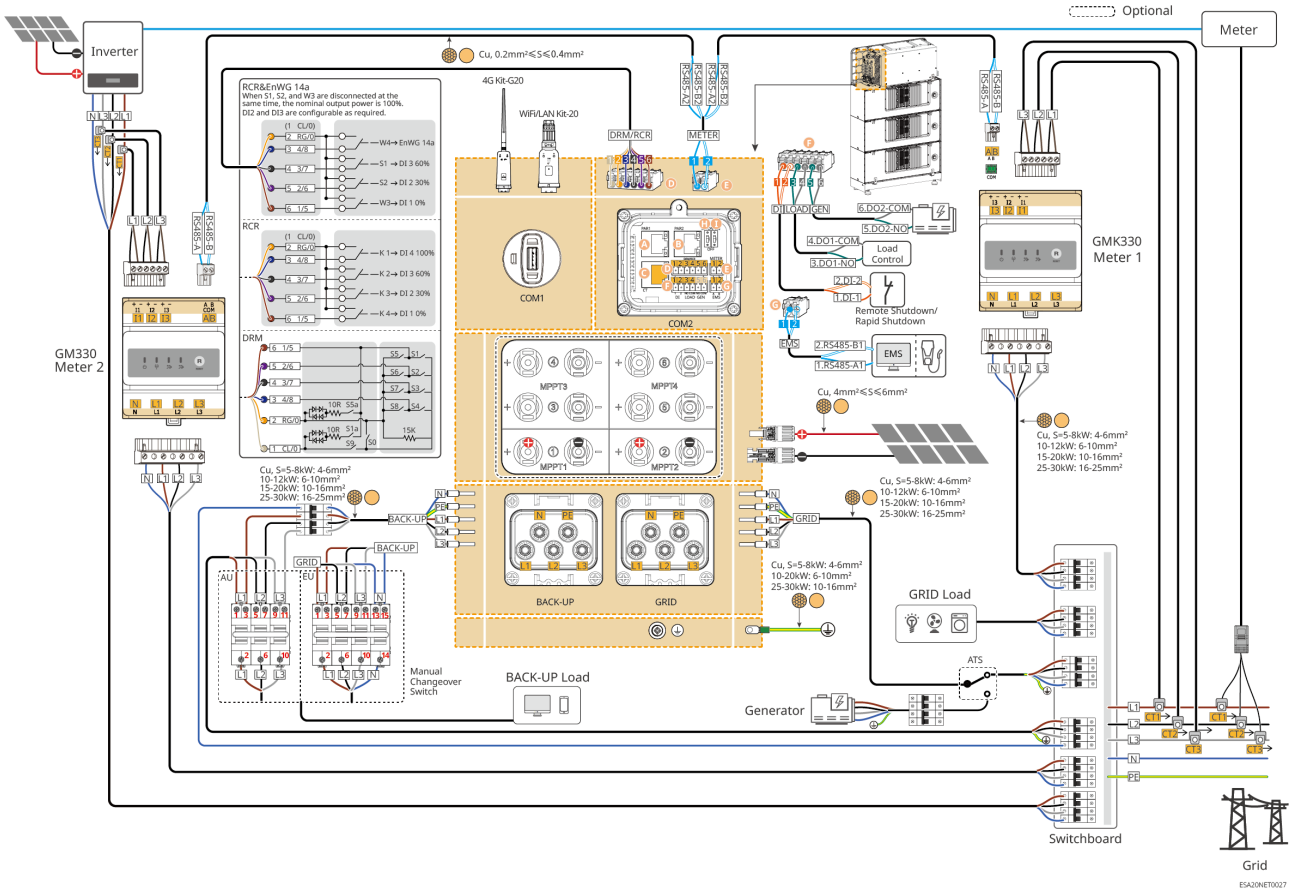

5.2.2 Detailed System Wiring Diagram for Parallel System

NOTICE

- If the system requires connection to DRED devices, RCR devices, remote shutdown devices, NS Protection, SG Ready heat pumps, etc., please connect them to the master inverter.
- Remote shutdown function: Please connect the communication cable to the master inverter. Rapid shutdown function: Please connect communication cables to each inverter separately. If you need to use both rapid shutdown and remote shutdown functions simultaneously, please contact the after-sales service center.
- In a parallel system, each inverter requires the installation of a WiFi/LAN Kit-20.
- The built-in meter of the inverter supports system parallel networking. During parallel operation, the total system current must not exceed the rated primary current of the standard CT.
- The parallel system supports generator connection. If connecting a generator, please ensure:
  - The generator power must be greater than the total power of all loads connected to the BACKUP port.
  - The current capacity of the accompanying ATS can meet the total current demand when all inverters output at rated power simultaneously.
- In a parallel system, if you need to disconnect the circuit breaker for any port of an inverter, please simultaneously disconnect the circuit breakers for the other ports of that inverter; otherwise, it may cause abnormal system operation.
- In a parallel system, set the DIP switches of the first and last inverters to the ON position, and set the DIP switches of the other inverters to the OFF position.
- If the number of parallel inverters exceeds 2, or if the wire gauge or range of the standard CT does not meet the total current requirements for the on-site parallel system, please use the GM330 smart meter.
- The following diagram focuses on wiring related to parallel connection. For wiring requirements of other ports, please refer to the single-unit system.

In a parallel system, the inverter connected to the meter is the master inverter, and the others are slave inverters.
The master inverter must be set as the host via the "Parallel System Settings" in the App.

General Scenarios

Scenario with Built-in Meter

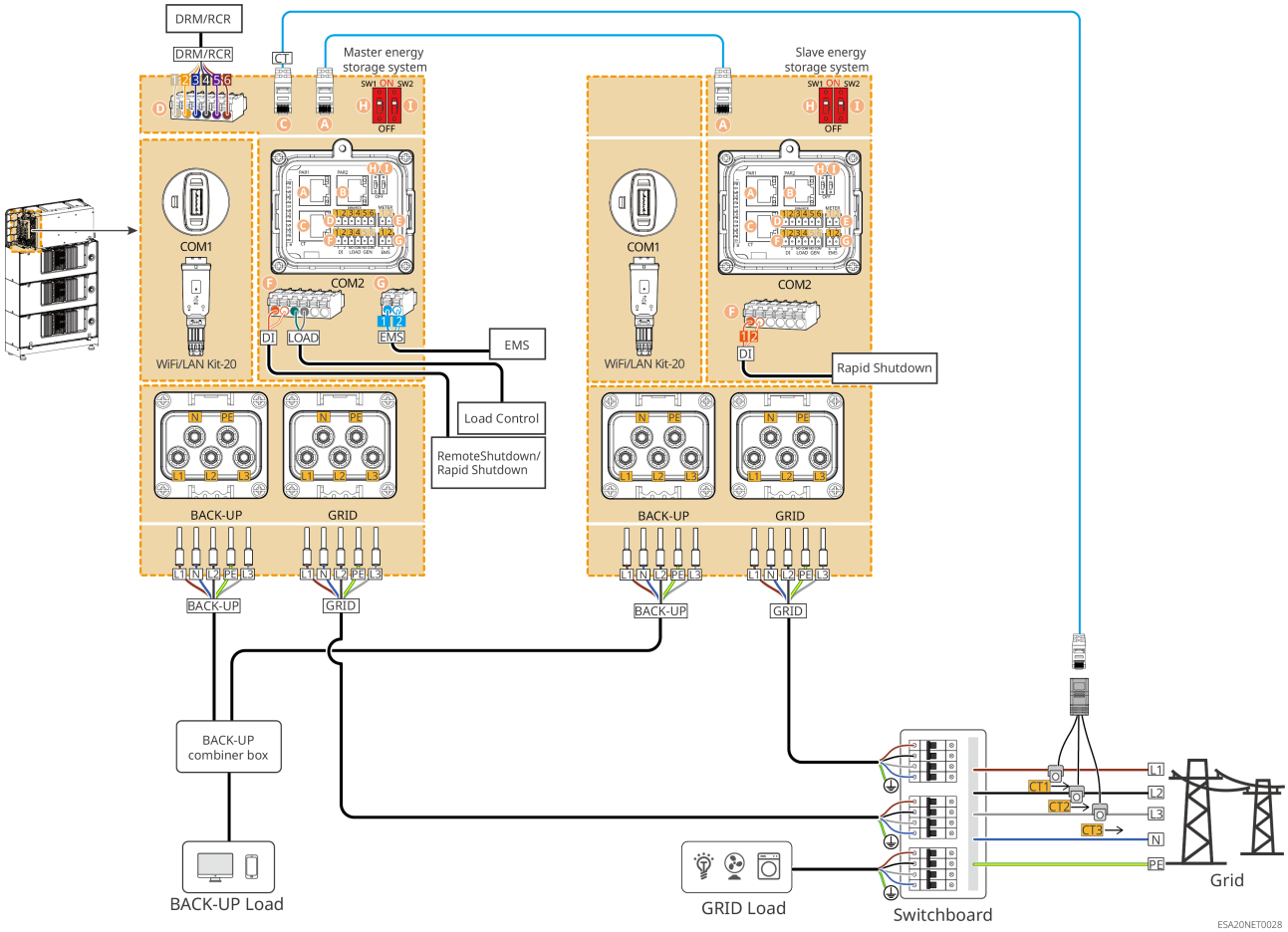

Scenario with GM330

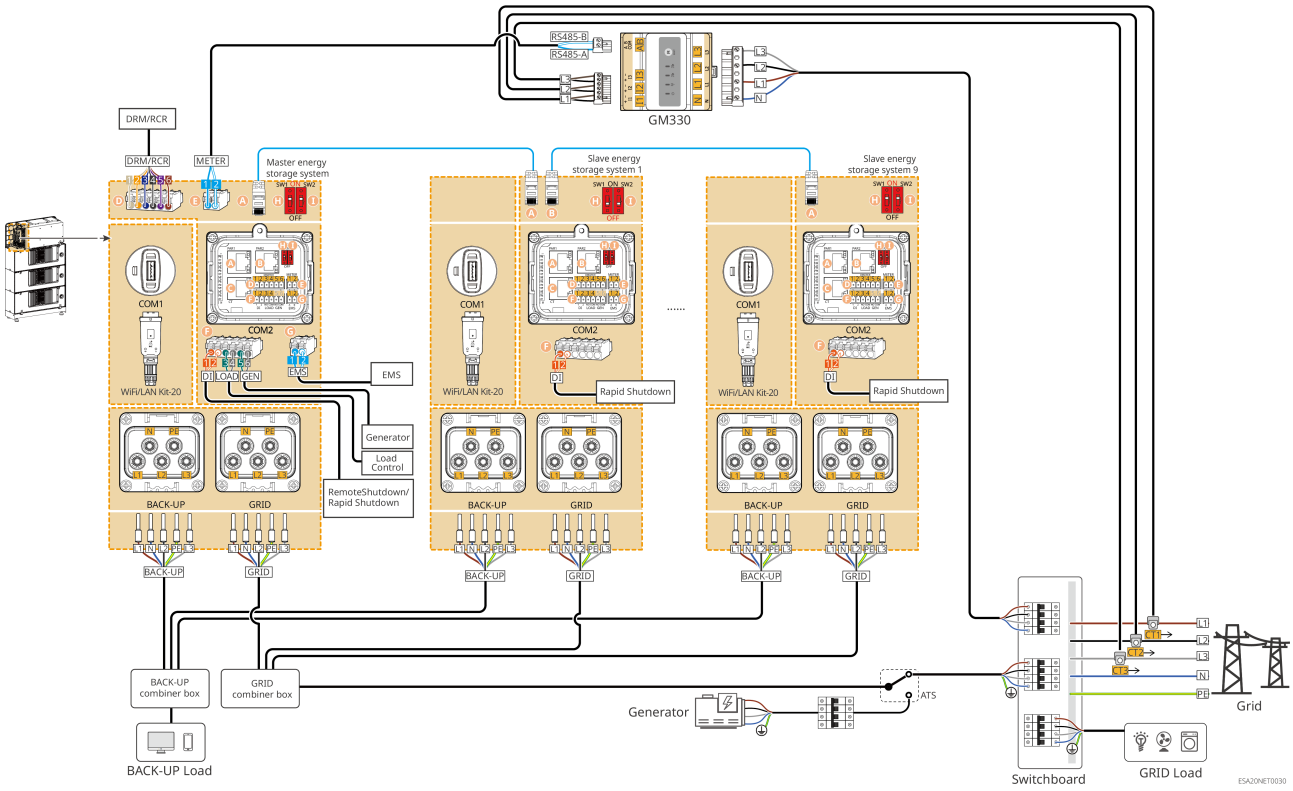

Scenario with GMK330

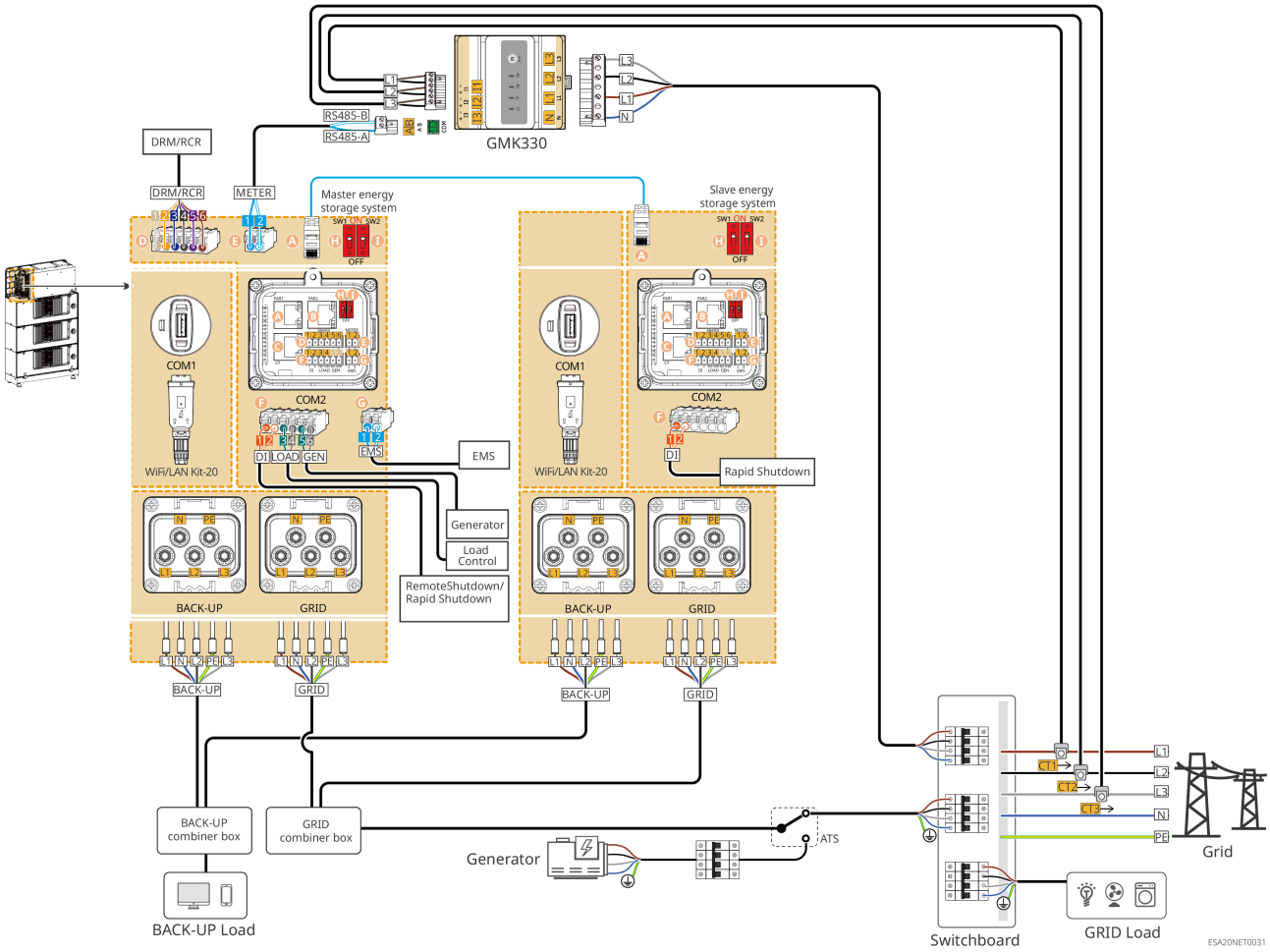

Coupling Scenarios

GM330 + GM330 Networking

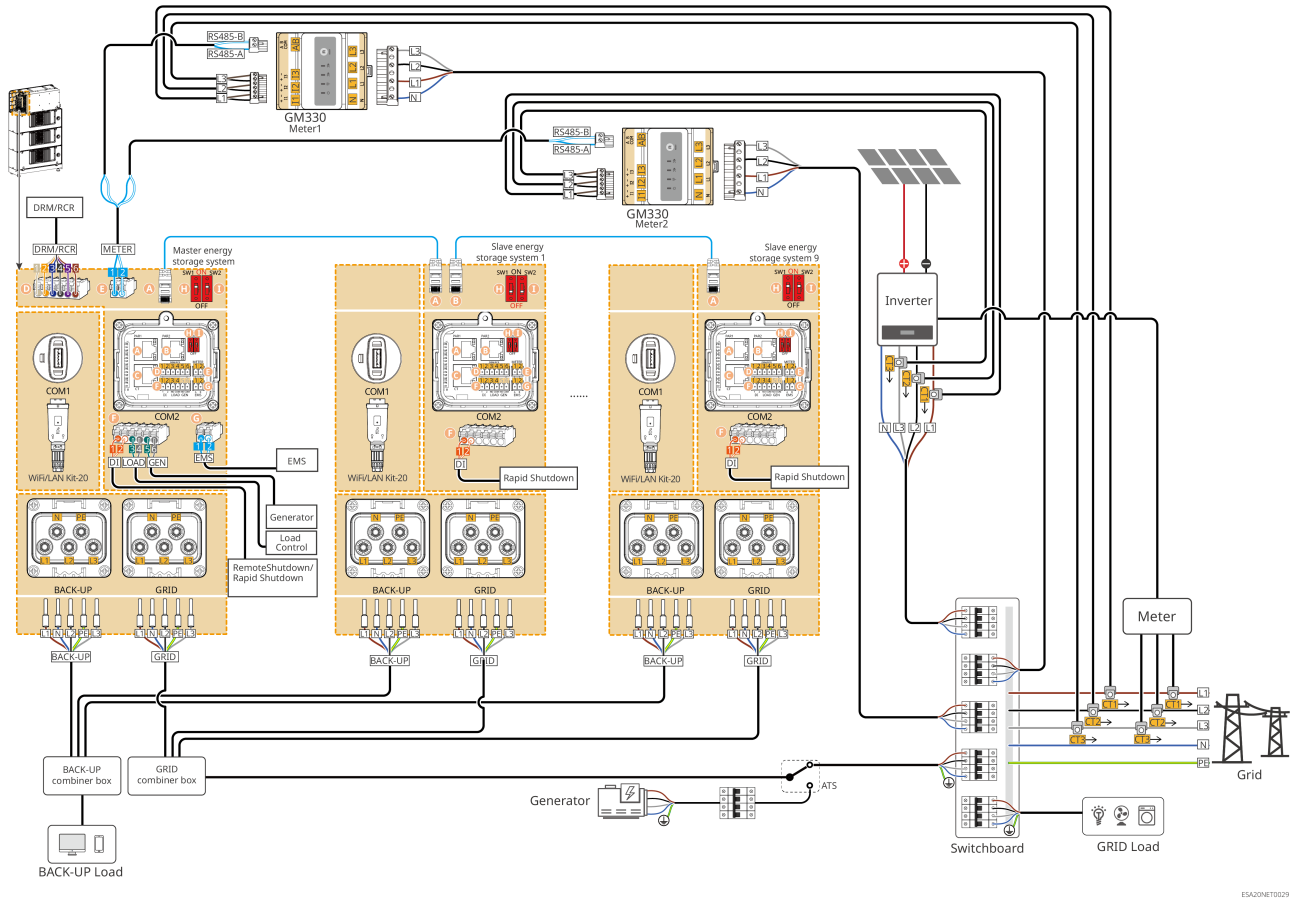

For system coupling scenarios where parallel operation is combined with other meter wiring methods, please refer to the general parallel scenarios. For grid-tied inverter wiring methods, please refer to the single-unit coupling scenario for wiring.

5.3 Preparing Materials

⚠WARNING

- Do not connect loads between the inverter and the AC switch directly connected to the inverter.
- Each inverter must be equipped with an AC output circuit breaker. Multiple inverters cannot be connected to one AC circuit breaker simultaneously.
- To ensure that the inverter can safely disconnect from the grid in case of abnormalities, please connect an AC circuit breaker on the AC side of the inverter. Select a suitable AC circuit breaker according to local regulations.
- When the inverter is powered on, the BACK-UP AC port is live. If maintenance is required on the BACK-UP Loads, please power off the inverter; otherwise, it may cause electric shock.
- For cables used in the same system, it is recommended that the following cable conductor material, cross-sectional area, length, etc., be consistent.
  - Inverter's BACK-UP AC cable
  - Inverter's GRID AC cable
- The inverter supports connecting to a generator via an ATS switch to achieve switching between grid and generator power supply. The ATS switch is by default connected to the grid.

5.3.1 Preparing Breakers

No.	breaker	Recommended Specifications	Obtaining Method	Remarks
1	GRID breaker BACK-UP breaker	For partial backup scenarios, the recommendations are as follows: • Nominal Voltage ≥230Vac • Rated current requirements are as follows: ◦ GW5K-ETA-G20：20A ◦ GW6K-ETA-G20：20A ◦ GW8K-ETA-G20：20A ◦ GW9.999K-ETA-G20：32A	Self-provided	During actual selection, you can also choose a breaker that meets local installation regulations based on the actual operating current.

No.	breaker	Recommended Specifications	Obtaining Method	Remarks
		◦ GW10K-ETA-G20：32A ◦ GW12K-ETA-G20：40A ◦ GW15K-ETA-G20：50A ◦ GW20K-ETA-G20：50A ◦ GW25K-ETA-G20：63A ◦ GW29.999K-ETA-G20：80A ◦ GW30K-ETA-G20：80A ◦ GW5K-BTA-G20：20A ◦ GW6K-BTA-G20：20A ◦ GW8K-BTA-G20：20A ◦ GW9.999K-BTA-G20：32A ◦ GW10K-BTA-G20：32A ◦ GW12K-BTA-G20：40A ◦ GW15K-BTA-G20：50A ◦ GW20K-BTA-G20：50A ◦ GW25K-BTA-G20：63A ◦ GW29.999K-BTA-G20：80A ◦ GW30K-BTA-G20：80A For whole-house backup scenarios, the recommendations are as follows: • Nominal Voltage ≥230Vac • Rated current requirements are as follows: ◦ GW5K-ETA-G20：63A ◦ GW6K-ETA-G20：63A		

No.	breaker	Recommended Specifications	Obtaining Method	Remarks
		◦ GW8K-ETA-G20：63A ◦ GW9.999K-ETA-G20：80A ◦ GW10K-ETA-G20：80A ◦ GW12K-ETA-G20：80A ◦ GW15K-ETA-G20：100A ◦ GW20K-ETA-G20：100A ◦ GW25K-ETA-G20：125A ◦ GW29.999K-ETA-G20：125A ◦ GW30K-ETA-G20：125A ◦ GW5K-BTA-G20：63A ◦ GW6K-BTA-G20：63A ◦ GW8K-BTA-G20：63A ◦ GW9.999K-BTA-G20：80A ◦ GW10K-BTA-G20：80A ◦ GW12K-BTA-G20：80A ◦ GW15K-BTA-G20：100A ◦ GW20K-BTA-G20：100A ◦ GW25K-BTA-G20：125A ◦ GW29.999K-BTA-G20：125A ◦ GW30K-BTA-G20：125A Note: If the inverter BACK-UP port is not used, the GRID breaker can be selected based on the maximum grid-connected current.		

No.	breaker	Recommended Specifications	Obtaining Method	Remarks
2	ATS switch	The specifications of the ATS switch and GRID breaker for the same model are consistent.	Self-provided	
3	RCD (RCD)	RCD device installation and RCD specification selection: It is recommended to connect a Type A RCD with a residual current tripping level ≥300mA to the AC output side of the inverter (for inverter capacity <30kVA, select the residual current operating level as 300mA; for inverter capacity ≥30kVA, select the residual current operating level as 10mA/kVA). Alternatively, choose an appropriate RCD specification based on local regulatory requirements.	Self-provided	-

No.	breaker	Recommended Specifications	Obtaining Method	Remarks
4	(Optional) Manual Transfer Switch	Nominal Voltage ≥230Vac Rated current requirements are as follows: • GW5K-ETA-G20, GW6K-ETA-G20, GW8K-ETA-G20, GW9.999K-ETA-G20, GW10K-ETA-G20, GW12K-ETA-G20, GW15K-ETA-G20, GW20K-ETA-G20, GW5K-BTA-G20, GW6K-BTA-G20, GW8K-BTA-G20, GW9.999K-BTA-G20, GW10K-BTA-G20, GW12K-BTA-G20, GW15K-BTA-G20, GW20K-BTA-G20: 63A • GW25K-ETA-G20, GW29.999K-ETA-G20, GW30K-ETA-G20, GW25K-BTA-G20, GW29.999K-BTA-G20, GW30K-BTA-G20: 80A	• Self-provided • Shipped with the inverter (Australia only)	• For single-unit scenarios only • During actual selection, you can also choose an appropriate manual transfer switch based on local regulations.

5.3.2 Preparing Cables

No.	Cable	Recommended Specifications	Acquisition Method
1	Inverter Chassis Protective Ground Cable	• Single-core outdoor copper cable • Conductor cross-sectional area: ◦ GW5K-ETA-G20, GW6K-ETA-G20, GW8K-ETA-G20, GW5K-BTA-G20, GW6K-BTA-G20, GW8K-BTA-G20: 4-6mm^2 ◦ GW9.999K-ETA-G20, GW10K-ETA-G20, GW12K-ETA-G20, GW15K-ETA-G20, GW20K-ETA-G20, GW9.999K-BTA-G20, GW10K-BTA-G20, GW12K-BTA-G20, GW15K-BTA-G20, GW20K-BTA-G20: 6-10 mm^2 ◦ GW25K-ETA-G20, GW29.999K-ETA-G20, GW30K-ETA-G20, GW25K-BTA-G20, GW29.999K-BTA-G20, GW30K-BTA-G20: 10-16 mm^2	Self-provided
2	PV DC Cable	• Industry-standard outdoor photovoltaic cable • Conductor cross-sectional area: 4mm^2-6mm^2 • Cable outer diameter: 5.9mm-8.8mm	Self-provided

No.	Cable	Recommended Specifications	Acquisition Method
3	AC Cable	• Inverter AC input/output cable (BACK UP/GRID): • Conductor cross-sectional area: ◦ GW5K-ETA-G20, GW6K-ETA-G20, GW8K-ETA-G20, GW5K-BTA-G20, GW6K-BTA-G20, GW8K-BTA-G20: 4-6mm^2 ◦ GW9.999K-ETA-G20, GW10K-ETA-G20, GW12K-ETA-G20, GW9.999K-BTA-G20, GW10K-BTA-G20, GW12K-BTA-G20: 6-10mm^2 ◦ GW15K-ETA-G20, GW20K-ETA-G20, GW15K-BTA-G20, GW20K-BTA-G20: 10-16mm^2 ◦ GW25K-ETA-G20, GW29.999K-ETA-G20, GW30K-ETA-G20, GW25K-BTA-G20, GW29.999K-BTA-G20, GW30K-BTA-G20: 16-25mm^2 • Multi-core outdoor copper cable outer diameter: ◦ GW5K-ETA-G20, GW6K-ETA-G20, GW8K-ETA-G20, GW9.999K-ETA-G20, GW10K-ETA-G20, GW12K-ETA-G20, GW5K-BTA-G20, GW6K-BTA-G20, GW8K-BTA-G20, GW9.999K-BTA-G20, GW10K-BTA-G20, GW12K-BTA-G20: 10-26mm ◦ GW15K-ETA-G20, GW20K-ETA-G20, GW15K-BTA-G20, GW20K-BTA-G20: 18-30mm	Self-provided
4	Smart Meter Power Cable	• Outdoor copper cable • Conductor cross-sectional area: 1mm^2	Self-provided

No.	Cable	Recommended Specifications	Acquisition Method
5	Meter RS485 Communication Cable	• Shielded twisted pair • Conductor cross-sectional area: 0.2mm²-0.4mm²	Self-provided
6	EMS or Charging Pile RS485 Communication Cable		
7	Remote Shutdown	• Shielded cable meeting local standards • Conductor cross-sectional area: 0.2mm²-0.4mm² • Cable outer diameter: 5mm-8mm	Self-provided
8	Load Control and Generator Control DO Communication Cable		
9	RCR/DRED/14a Signal Cable		
10	CT Communication Cable	Standard network cable: CAT 5E or above standard shielded network cable and RJ45 connector	Self-provided

5.4 Connecting the PE cable

⚠WARNING

- The protective grounding of the chassis cannot replace the protective ground wire of the AC output port. When wiring, ensure the protective ground wires at both locations are reliably connected.
- To improve the corrosion resistance of the terminal, it is recommended to apply silicone or paint over the external part of the grounding terminal for protection after the protective ground wire connection installation is completed.
- When installing the equipment, the protective ground wire must be installed first; when removing the equipment, the protective ground wire must be removed last.
- The battery grounding is integrated into the blind-mating connector connected to the inverter. The system is uniformly grounded through the inverter, so no separate grounding operation is required for the battery during installation. If there is a requirement for split expansion, please separately ground the expansion battery pack.

Energy storage system grounding:

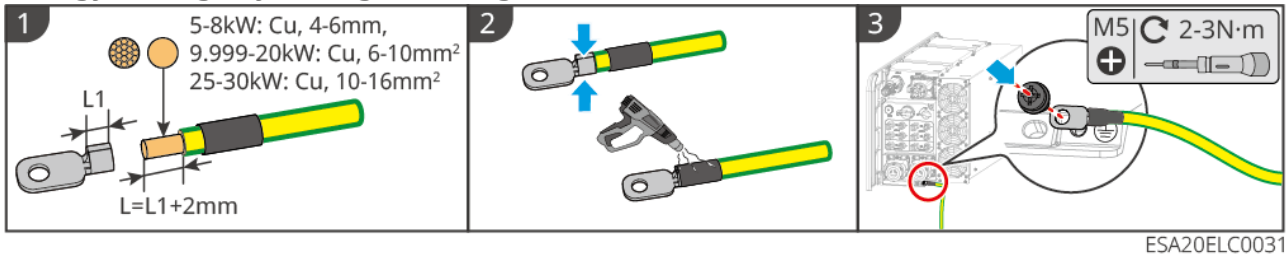

ESA20ELC0031

Expansion battery pack grounding:

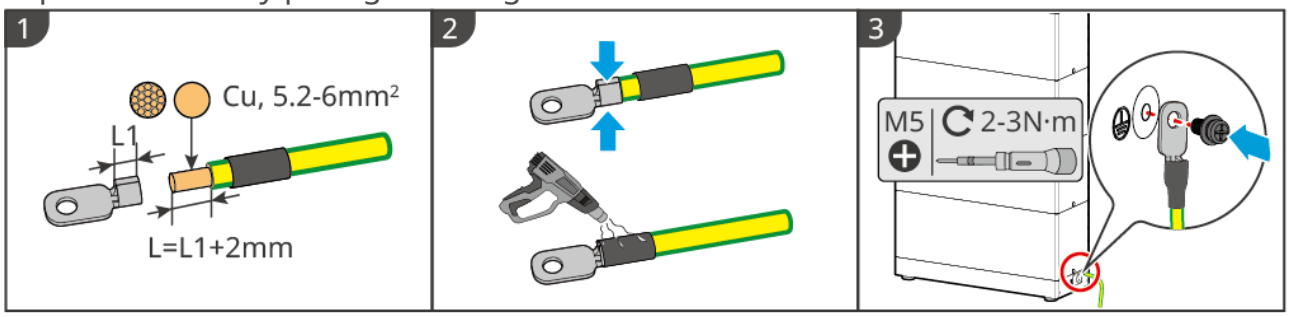

BAT20ELC0003

5.5 Connecting the PV Cable

⚠DANGER

- Do not connect the same PV string to multiple inverters, as this may cause inverter damage.
- Before connecting the PV string to the inverter, confirm the following information. Failure to do so may cause permanent damage to the inverter, and in severe cases, may lead to fire, resulting in personal injury and property loss.
  1. Ensure the maximum short-circuit current and Max. Input Voltage for each MPPT are within the inverter's allowable range.
  2. Ensure the positive pole of the PV string is connected to the inverter's PV+ terminal, and the negative pole is connected to the inverter's PV- terminal.

⚠WARNING

- PV string output does not support grounding. Before connecting the PV string to the inverter, ensure the minimum insulation resistance to ground of the PV string meets the minimum insulation impedance requirement (R = Max. Input Voltage / 30mA).
- After completing the DC cable connection, ensure the cable connections are tight and secure, with no looseness.
- Use a multimeter to measure the positive and negative poles of the DC cable to ensure correct polarity (no reverse connection) and that the voltage is within the allowable range.

NOTICE

- The two PV strings within each MPPT should use the same model, the same number of panels, and the same tilt and azimuth angles to ensure maximum efficiency.
- Connecting PV cables applies only to the ETA model; the BTA model does not have PV connection ports.

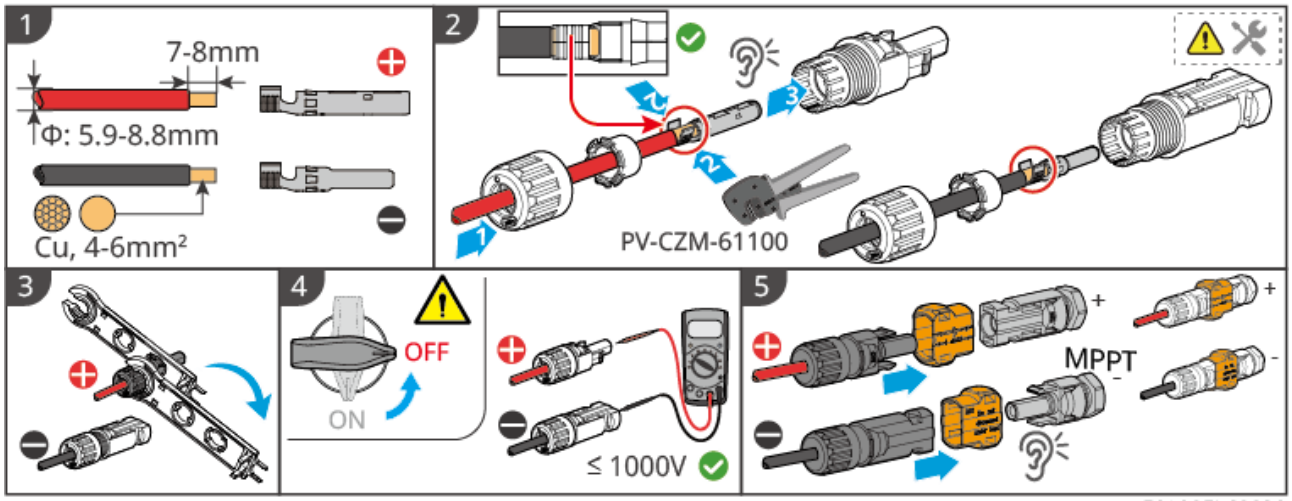

To disassemble the PV terminal, please refer to the following steps:

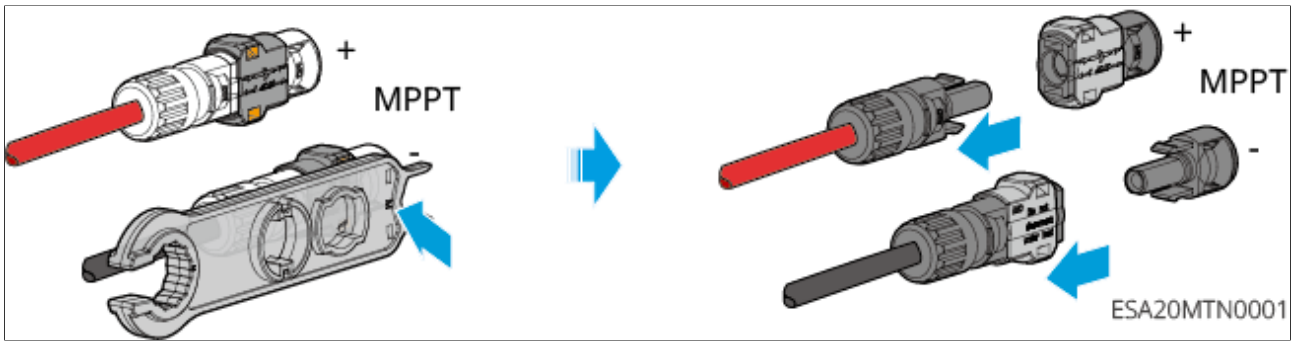

5.6 Expansion line connection for Battery

DANGER

- Do not connect any load between Inverter and Battery.
- When Connecting the Battery Cable, use insulated tools to prevent accidental electric shock or Battery Short Circuit.
- Please ensure that Batteryopen-circuit voltage is within the allowable range of Inverter.
- Between Battery and Battery, please configure DC Switch according to local laws and regulations.
- Inverterheat sink surface and surrounding areas are prohibited from wiring to prevent overheating damage to the wire harness.

energy storage system Expansion Overview

A1: Base shipped with Inverter

A2: Installation Base with parallel port

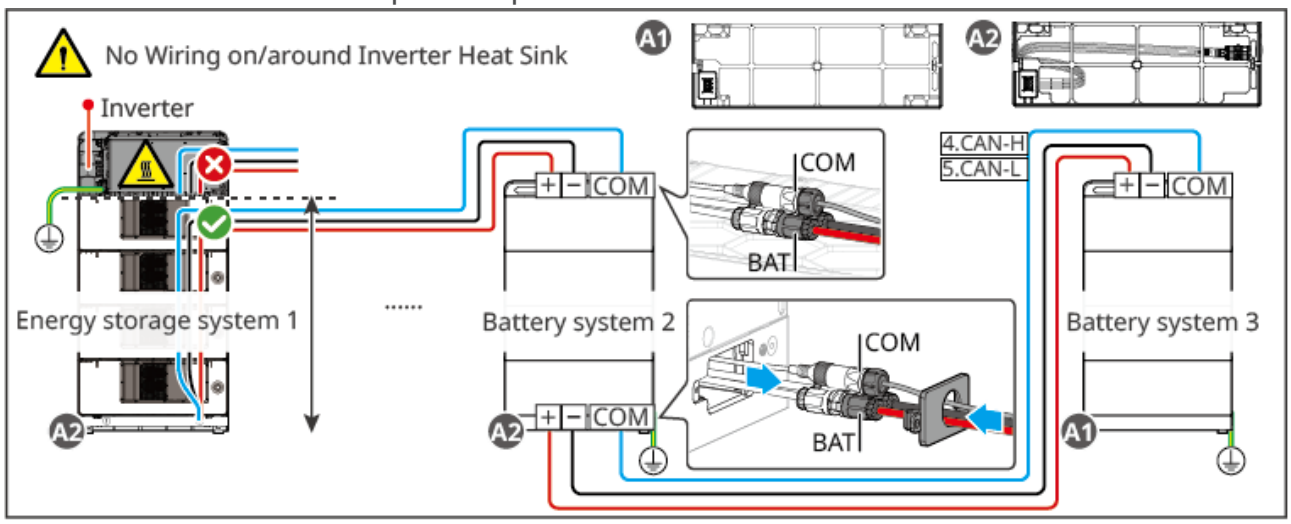

ESA20ELC0025

Battery system Expansion Harness Manufacturing Method

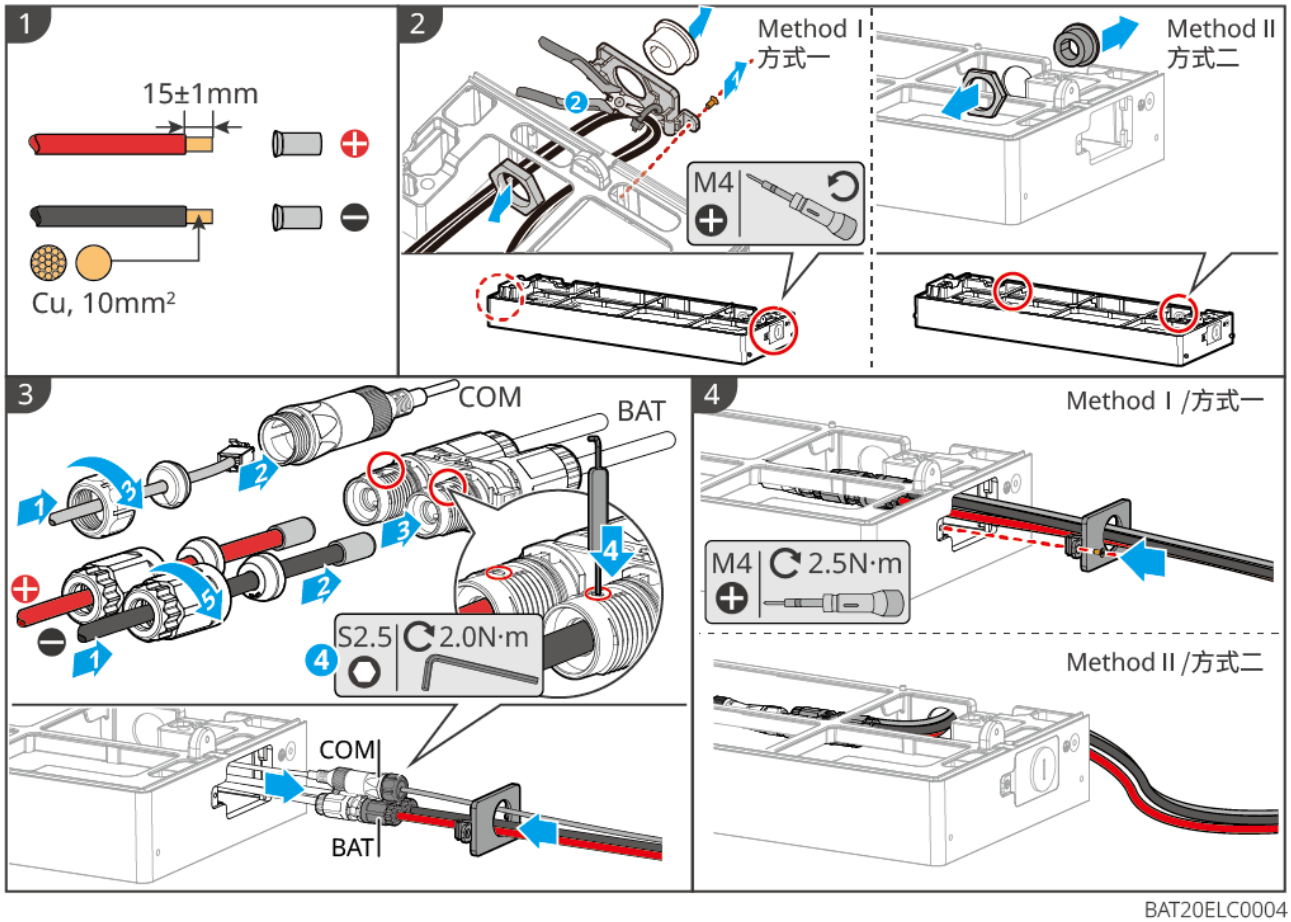

BAT20ELC0004

Battery Expansion Harness Disassembly Method

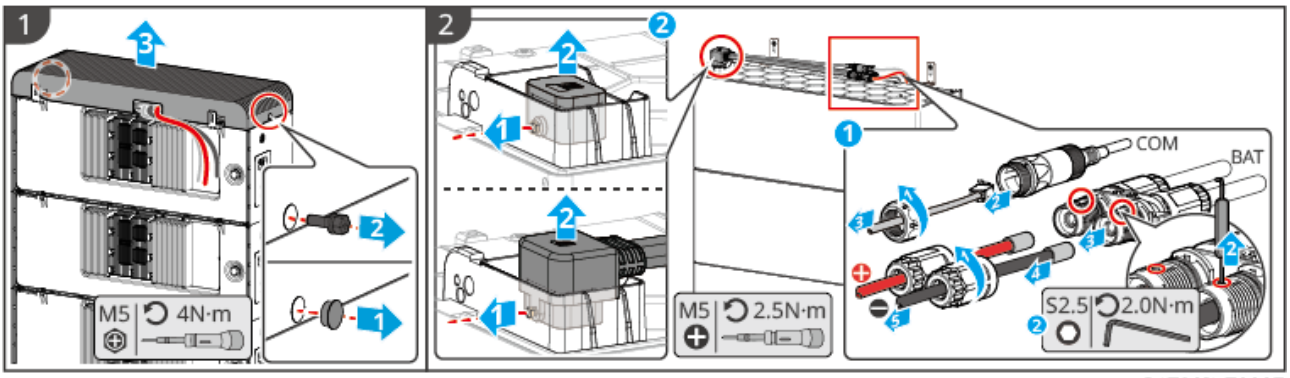

BAT20INT0007

5.7 Connecting the AC Cable

⚠WARNING

- The inverter has an integrated Residual Current Monitoring Unit (RCMU) to prevent residual current from exceeding the specified limit. When the inverter detects a leakage current greater than the permitted value, it will quickly disconnect from the grid.
- During wiring, ensure the AC cables are correctly matched to the "BACKUP" and "GRID" ground terminals of the AC terminal block. Incorrect cable connection may cause equipment damage.
- Ensure the wire cores are fully inserted into the terminal connection holes with no exposed part.
- Ensure the insulation plate at the AC terminal block is securely fastened and not loose.
- Ensure all cable connections are tight. Otherwise, overheating of the terminals during operation may cause equipment damage.

NOTICE

- When crimping AC cables, it is recommended to use a crimping tool with a hexagonal (or more sides) crimp shape.
- After system installation is complete and wiring is confirmed correct, under normal operation, the home's critical loads should be powered by the energy storage inverter's BACK-UP port.
- After AC wiring is completed, please set the manual transfer switch to the "BACK-UP" position to engage. The fixed lock bracket supplied with the manual transfer switch can be installed as needed. If installation is required, to facilitate the installation and removal of the padlock accessory, reserve at least 35mm of space on each side of the switch.

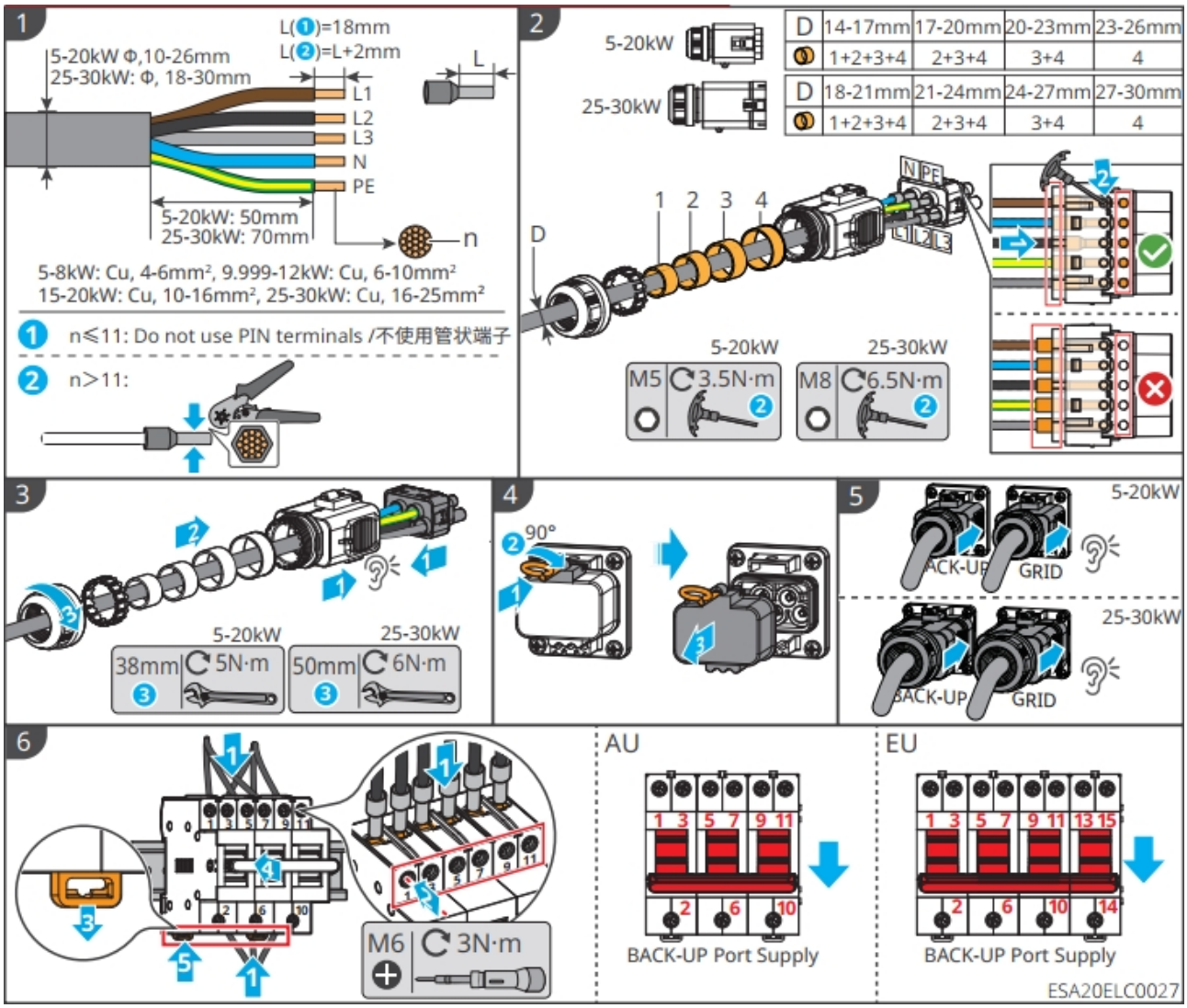

(Optional) Install the manual transfer switch lock

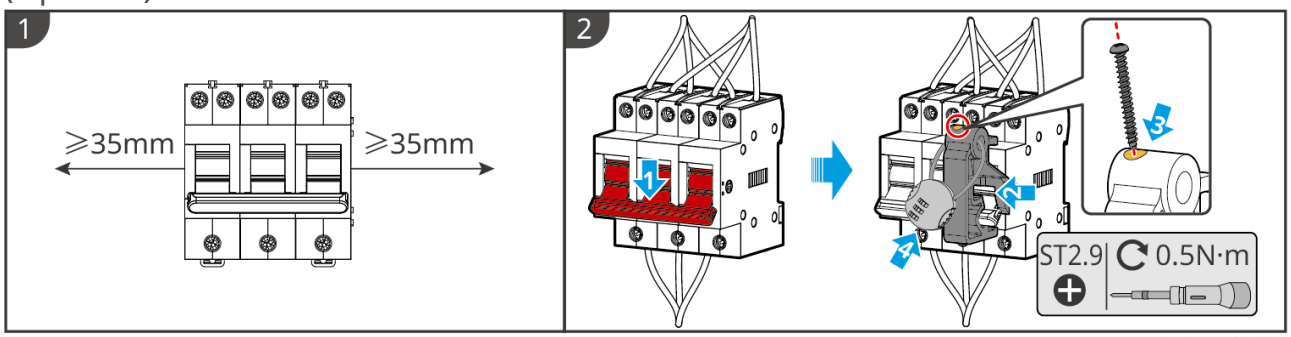

ESA20ELC0033

If you need to disassemble the AC terminal, please refer to the following steps:

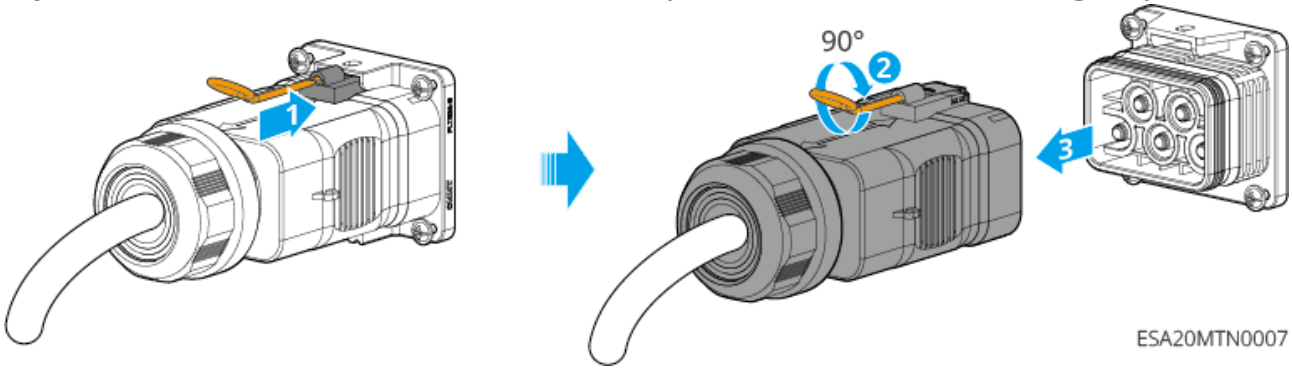

ESA20MTN0007

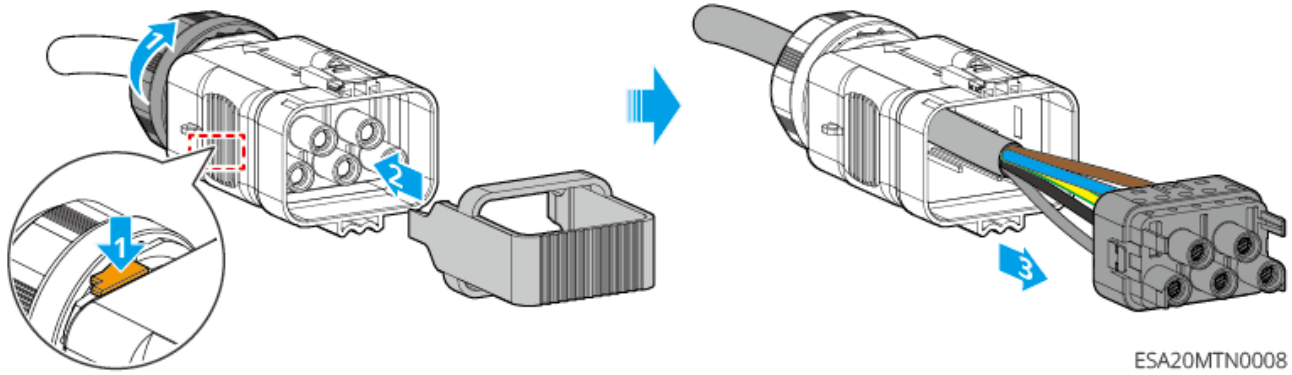

ESA20MTN0008

5.8 Connecting the Meter Cable

NOTICE

- If there is a need for multiple inverters to be connected in parallel for networking, please consult the manufacturer to purchase a meter separately.
- Please ensure that the CT connection direction and phase sequence are correct; otherwise, it may lead to incorrect monitoring data.
- Ensure that all cables are connected correctly, tightly, and without looseness. Improper wiring may cause poor contact or damage to the meter.
- In areas with lightning risks, if the meter cable length exceeds 10m and the cables are not laid with grounded metal conduits, it is recommended to install external lightning protection devices.

GM330 Meter Wiring

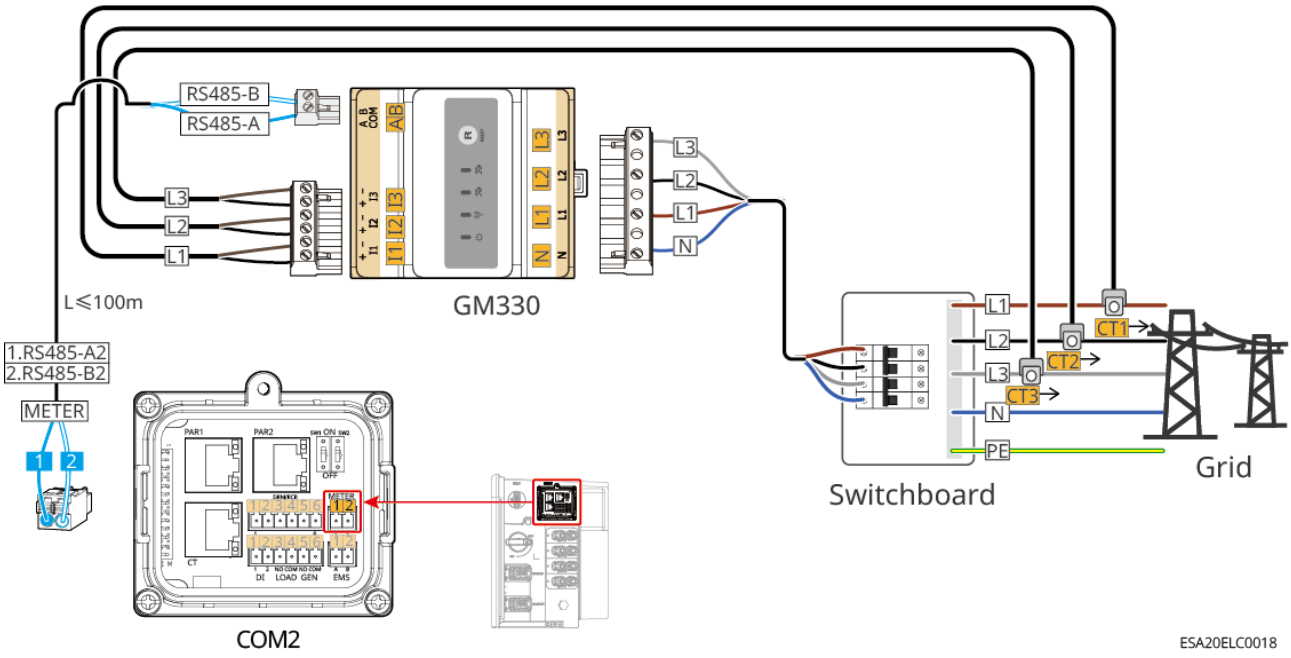

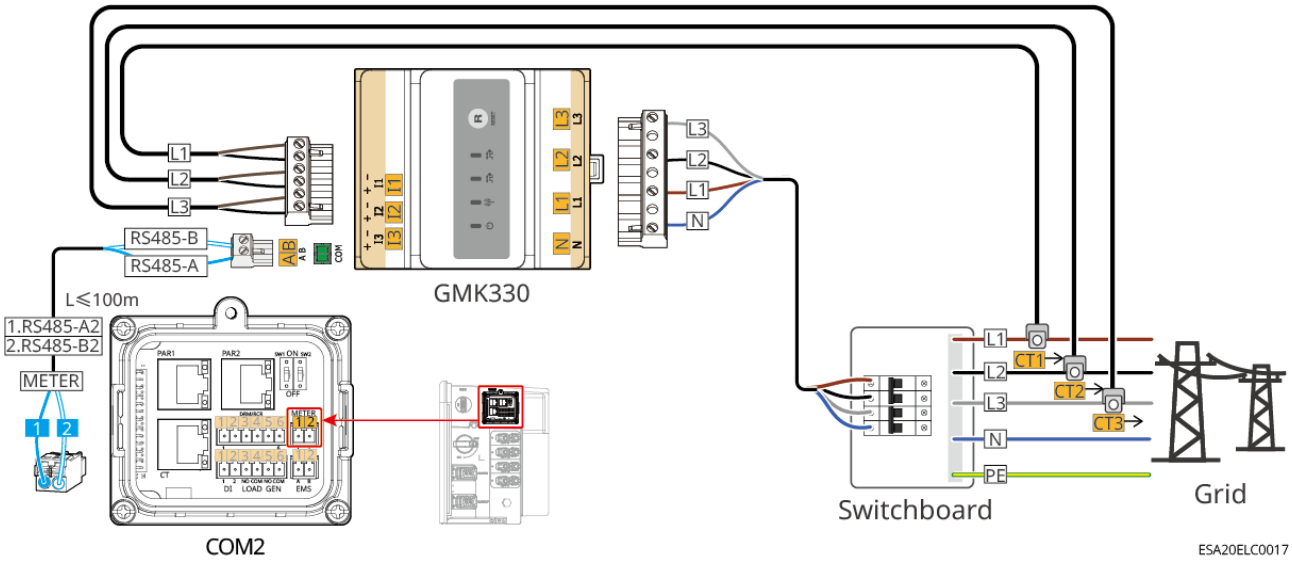

Wiring Steps

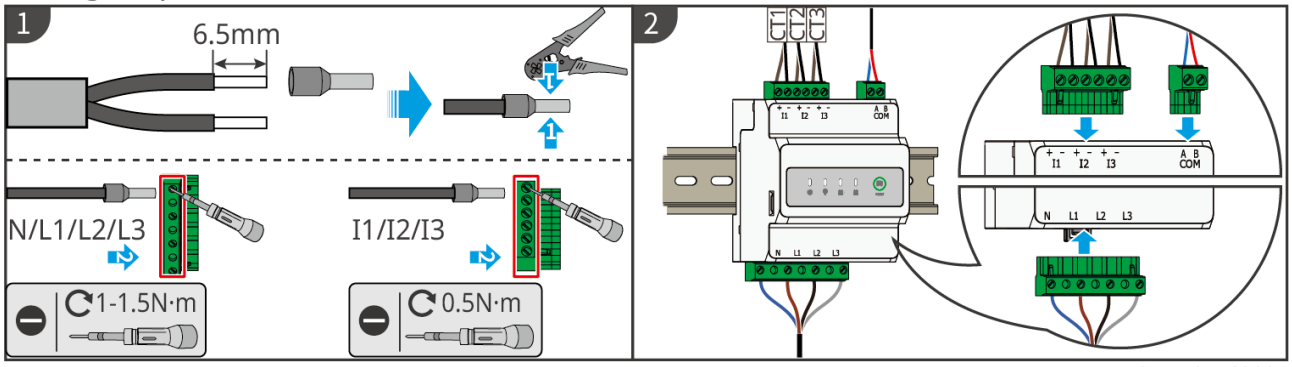

Install CT (Type One)

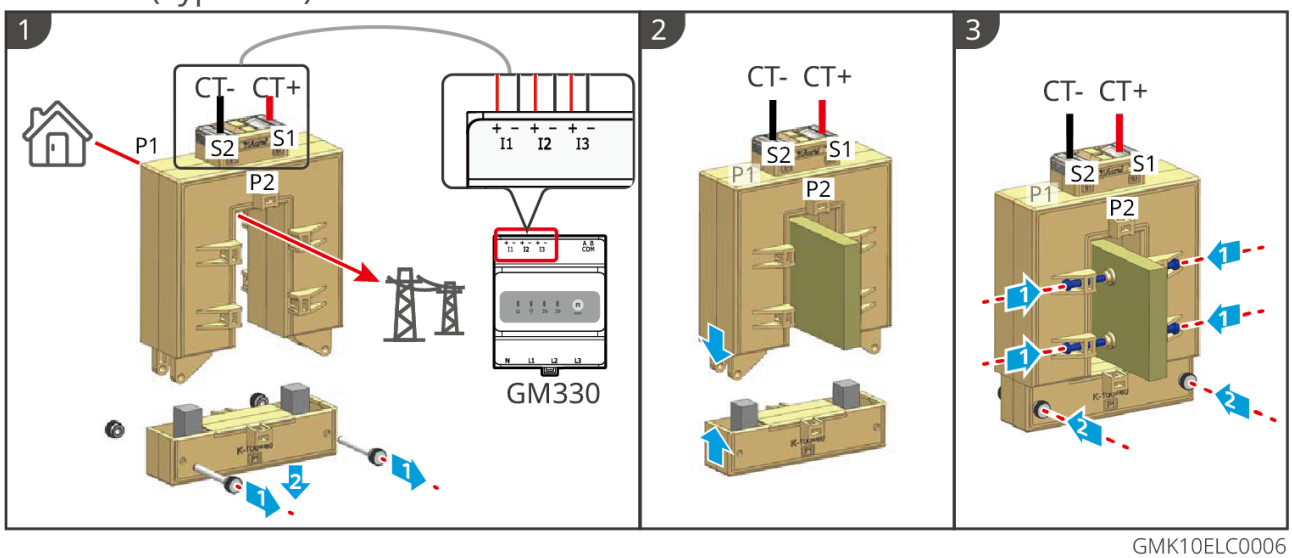

Install CT (Type Two)

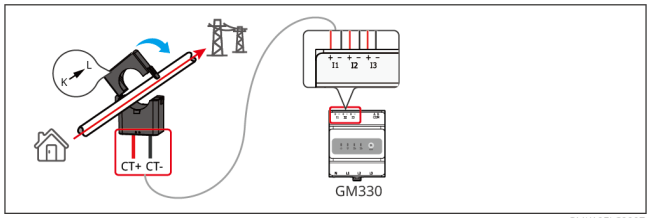

GMK10ELC0007

5.9 Connecting the Inverter Communication Cable

NOTICE

- To ensure the meter and CT function properly, please ensure the following: the CT must be connected to the matching phase line, with CT1 connected to L1, CT2 connected to L2, and CT3 connected to L3.
- When using the Inverter's built-in meter, please use the CTs shipped with the unit.
- If you need to use the DRED, RCR, or remote shutdown function, please enable this function in the SEMS+ App after completing the wiring.
- If the Inverter is not connected to a DRED device or a remote shutdown device, do not enable this function in the SEMS+ App, otherwise the Inverter will be unable to operate in grid-tied mode.
- In a parallel system, to implement the DRED or RCR function, only connect the DRED or RCR communication cable to the master Inverter.
- To maintain the Inverter's waterproof rating, do not remove the waterproof plugs from unused communication ports on the Inverter.
- For the Inverter's DO signal communication port, the dry contact signal specifications are: Max≤24Vdc, 1A.
- The Inverter's communication functions are optional; please select them according to your actual usage scenario.
- The Inverter supports connecting via Bluetooth, WiFi, or LAN to a mobile phone or WEB interface to set device parameters, view device operation information and error messages, and stay informed of the system status.
- In a single-unit system, the installation of a WiFi/LAN Kit-20 or 4G Kit-CN smart communication stick is supported.
- In a parallel system, both the master and slave Inverters need to have a WiFi/LAN Kit-20 smart communication stick installed for networking.
- In a parallel system, the DIP switches on the first and last Inverters must be set to the ON position, while the switches on all other Inverters should be set to the OFF position.

Communication Function Description

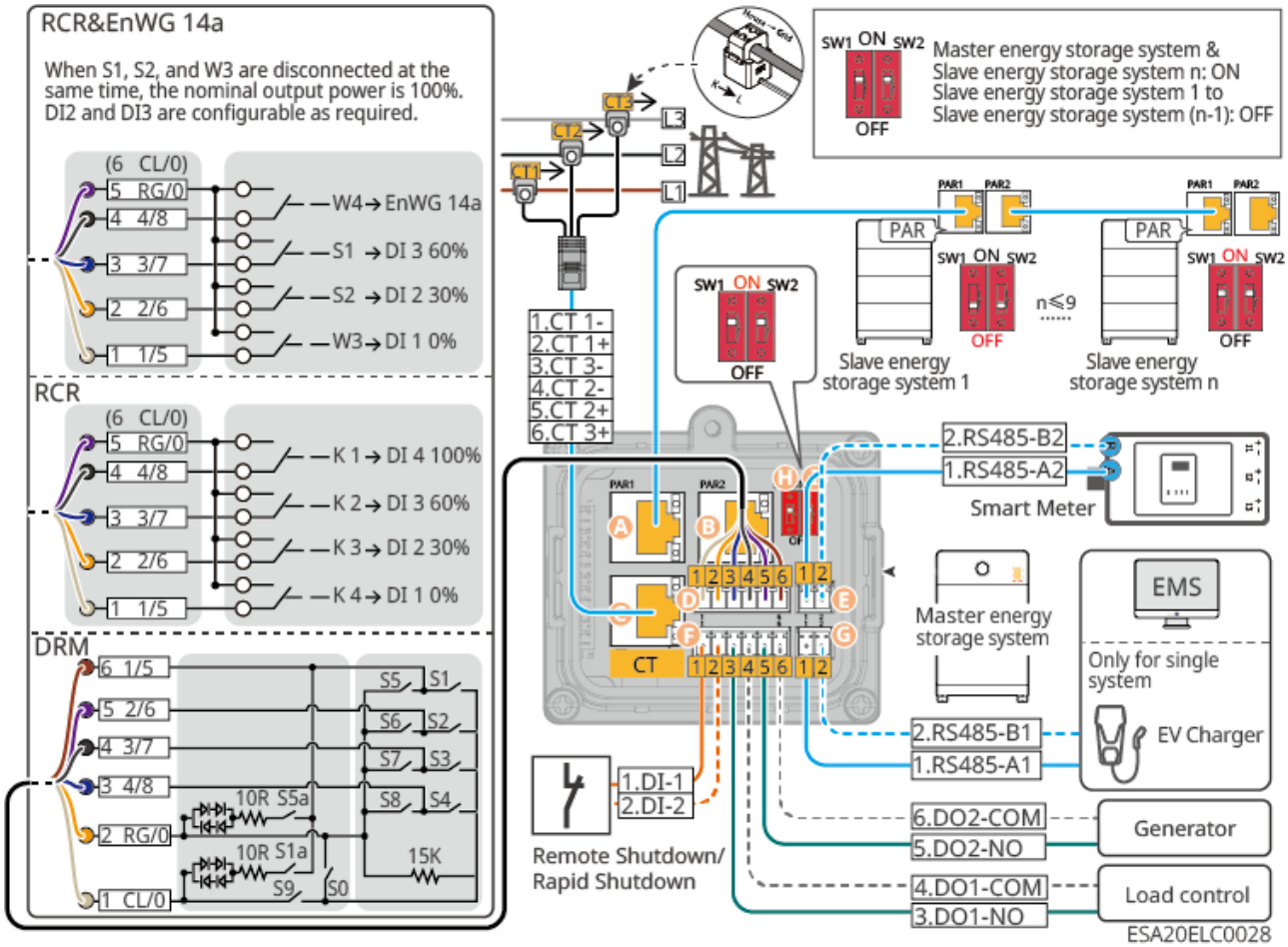

Port (Silkscreen)		Function	Description
A	PAR1	Parallel Communication Port 1	Parallel Communication Port. Please use CAT 5E or above standard network cable and RJ45 connector.
B	PAR2	Parallel Communication Port 2	
C	CT	CT Connection Port	Only when using the inverter's built-in meter, connect the CT communication cable.

Port (Silkscreen)		Function	Description
D	DRM/RCR	RCR, DRED or EnWG 14a Function Connection Port	• RCR (Ripple Control Receiver): Provides RCR signal control port to meet the grid dispatch requirements in Europe. • DRED (Demand Response Enabling Device): Provides DRED signal control port to meet DERD certification requirements in regions like Australia. • EnWG (Energy Industry Act) 14a: All controllable loads need to accept grid emergency dimming. Grid operators can temporarily reduce the maximum grid power purchase of controllable loads to 4.2kW.
E	METER	Meter Connection Port	Use RS485 communication to connect external smart meter.
F	DI	Remote Shutdown / Rapid Shutdown	• External Remote Shutdown device, default is off. • In a Rapid Shutdown system, the Rapid Shutdown transmitter and receiver work together to achieve rapid system shutdown. The receiver maintains component output by receiving signals from the transmitter. The transmitter can be external or built into the inverter. In case of emergency, by enabling an external trigger device, the transmitter stops working, thereby shutting down the components.

Port (Silkscreen)		Function	Description
	LOAD	load control	• Supports connection to dry contact signals to achieve functions such as load control. DO contact capacity is 24V DC@1A, NO/COM normally open contacts. • Supports SG Ready heat pump access, controlling the heat pump via dry contact signals.
	GEN	Generator Control Port	Supports connecting generator control signals to control generator start/stop. In microgrid scenarios, connecting generators is not supported.
G	EMS	EMS/Charging Pile Communication Port	• Connect third-party EMS devices for energy control • Only in standalone scenarios, supports connecting GoodWe charging piles.
H	SW1	-	-
I	SW2		

Method for Connecting the Communication Cable

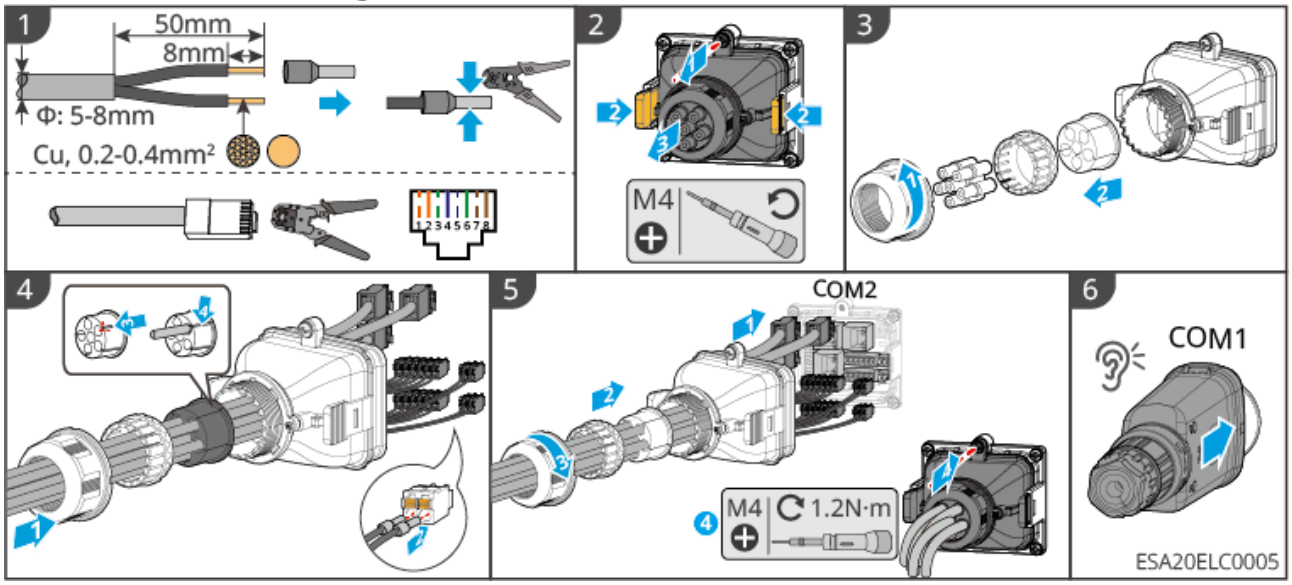

6 System Commissioning

6.1 Check Before Power ON

No.	Inspection items
1	The equipment is firmly installed, easy to operate and maintain, with sufficient space for ventilation and heat dissipation, and the environment is clean and tidy.
2	PE cable, DC cables, AC cables, and Communication cable are correctly and securely connected.
3	The cable ties meet the wiring requirements, are reasonably distributed, and show no signs of damage.
4	Unused through-holes and port must be reliably connected using the provided terminal accessories and properly sealed.
5	Ensure that all used wire feed-through holes are properly sealed.
6	The voltage and Frequency of the Inverter on-grid access point comply with the on-grid requirements.

6.2 Power ON

⚠WARNING

- Battery black start: When there is no PV power generation in the photovoltaic system and the grid is abnormal, if the inverter cannot work normally, the battery black start function can be used to force battery discharge to start the inverter. The inverter can enter off-grid mode operation, and the battery supplies power to the load.
- After the battery system is started, please ensure that the inverter and battery system communicate normally within 15 minutes. If the inverter and battery system cannot communicate normally, the battery system switch will automatically disconnect, and the battery system will be powered off.
- When the inverter is working normally, please set the manual transfer switch to the BACK-UP position to engage, and power the load from the inverter BACK-UP port.
- PV strings and "5" are only applicable to the ETA series.

NOTICE

During the initial system power-on, it is recommended to perform a battery black start once. Close the battery power switch and briefly press the multifunction button on one of the batteries. Observe whether the inverter SOC indicator light illuminates. If the indicator light is on, it indicates the battery is connected properly, and you can proceed to close the DC switch of the inverter.

power on

Single System Scenario:

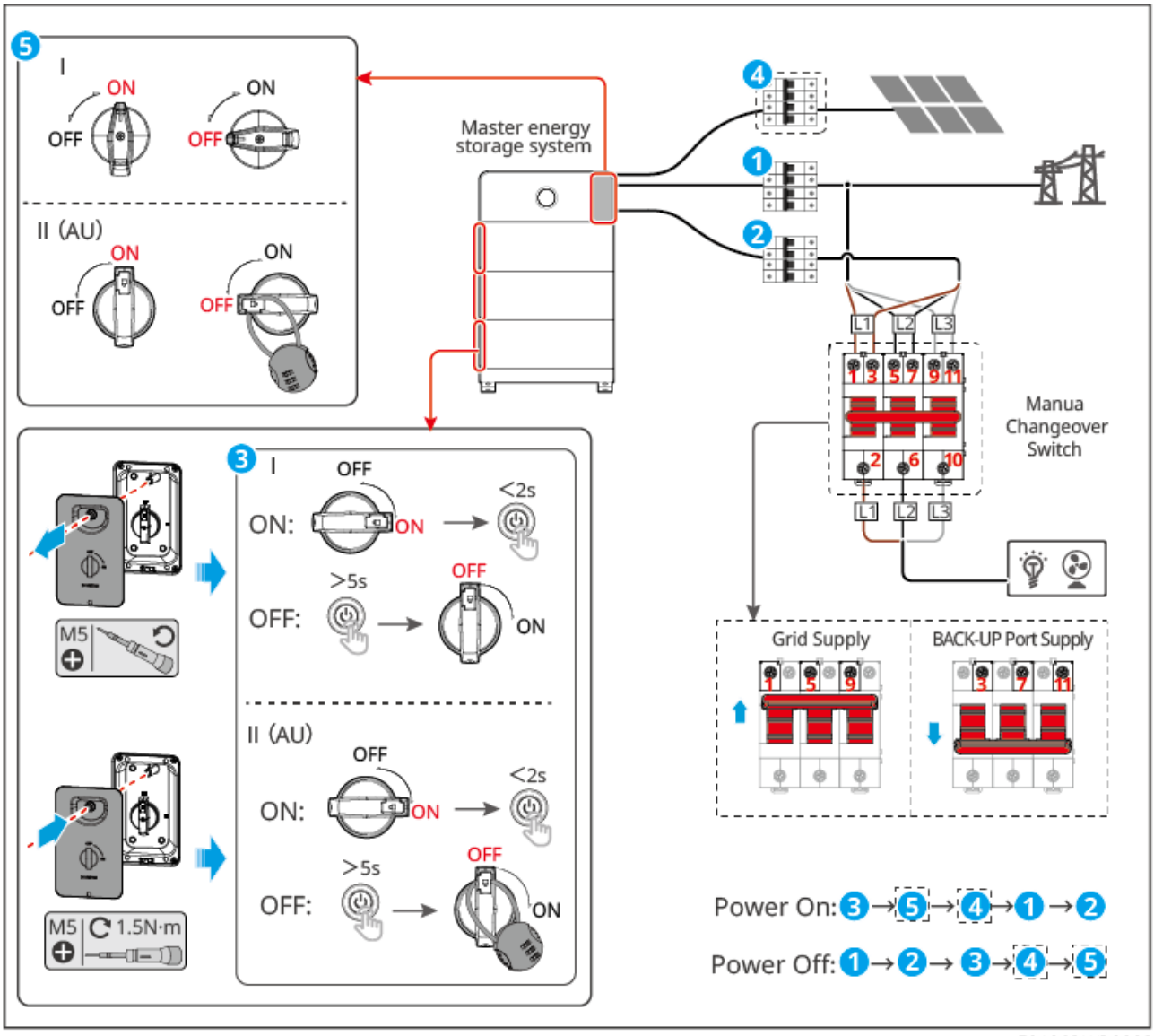

1. Close the battery power switch and briefly press the battery's multifunction button. When there are multiple batteries in the system, close the power switches of all batteries. Briefly pressing the multifunction button on any one battery will start all batteries.
2. Close the inverter's DC switch.
3. Close the breaker between the PV components and the inverter.
4. In a parallel system, close the GRID breaker.
5. Set the manual transfer switch to the BACK-UP position to engage it, supplying power to the loads from the BACK-UP port. Close the BACK-UP breaker.

parallel system:

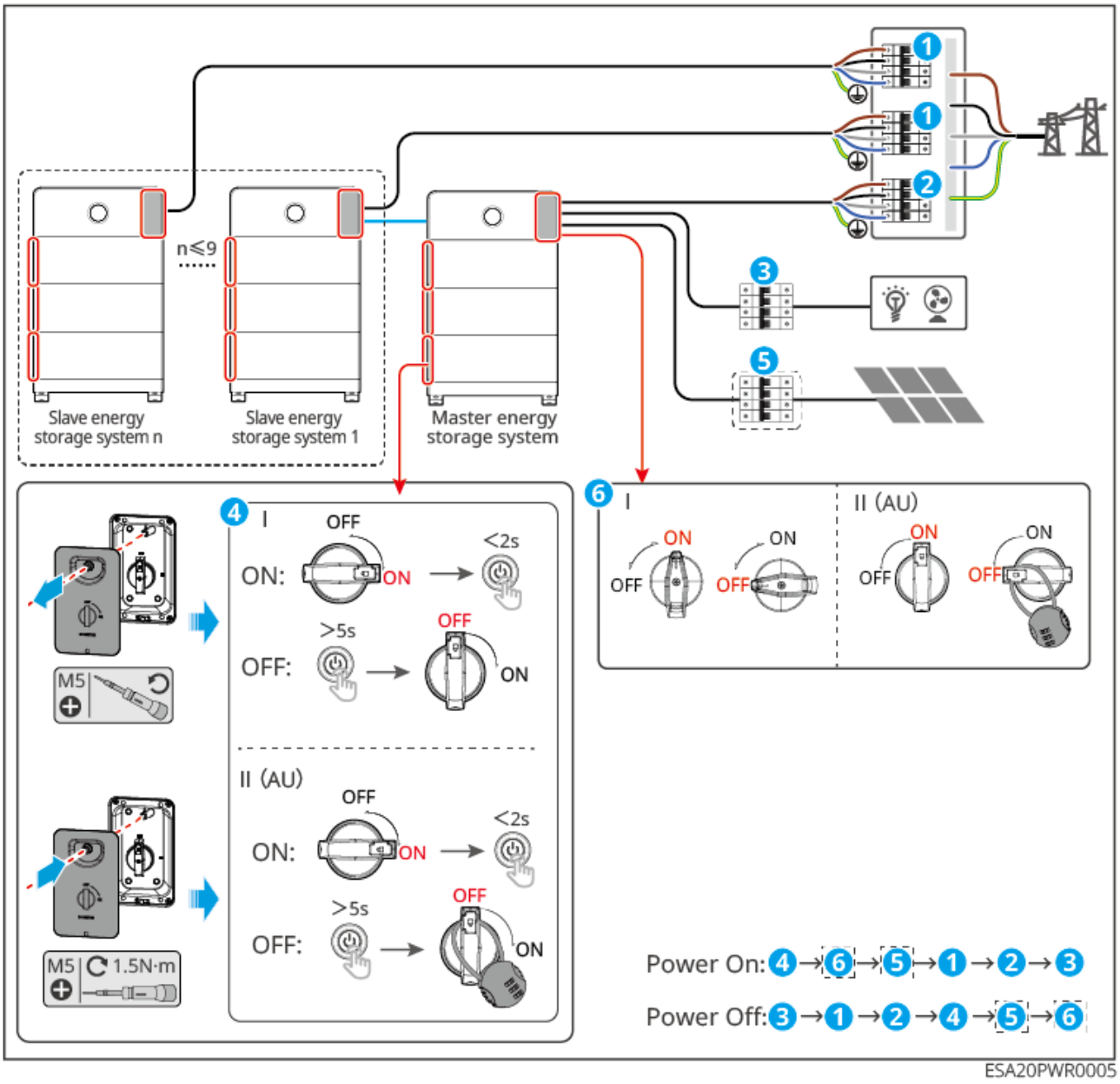

1. Close the battery power switch and briefly press the battery's multifunction button. When there are multiple batteries in the system, close the power switches of all batteries. Briefly pressing the multifunction button on any one battery will start all batteries.
2. Close the inverter's DC switch.
3. (Optional) Close the breaker between the PV components and the inverter.
4. Close the GRID breaker from the inverter.
5. Close the main inverter GRID breaker.
6. Close the BACK-UP breaker.

Battery Black Start

1. Close the battery power switch. When there are multiple batteries in the system, close the power switches of all batteries.
2. Close the inverter's DC switch.
3. (Optional) Close the breaker between the PV components and the inverter.
4. Close the GRID breaker.
5. Close the BACK-UP breaker.
6. After all batteries are powered on separately, wait for 15 seconds, then press and hold the multifunction button on any one battery for 2 seconds to force the battery to discharge and activate the inverter.

6.3 Installing the Protective Cover

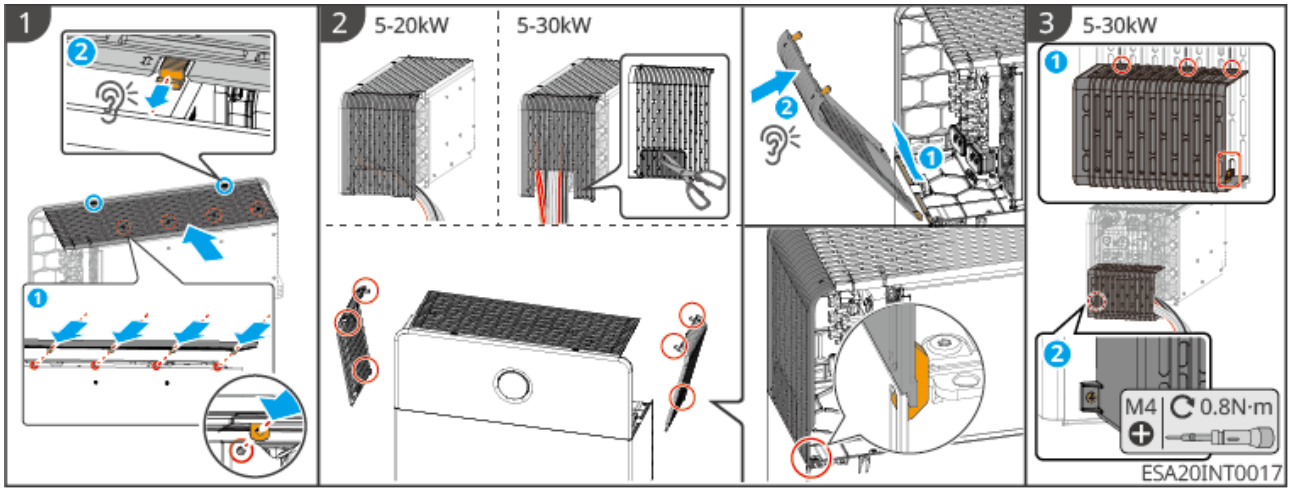

Step 1: Install the inverter top cover. Align the cover with the installation slot on the top of the inverter and slide it forward.
Step 2: Install the side cover. Place the side cover into the slot on the side of the battery and push it forward.
Step 3: (Optional) If using side cable routing, install the cable cover.

6.4 Indicators

6.4.1 Inverter Indicators

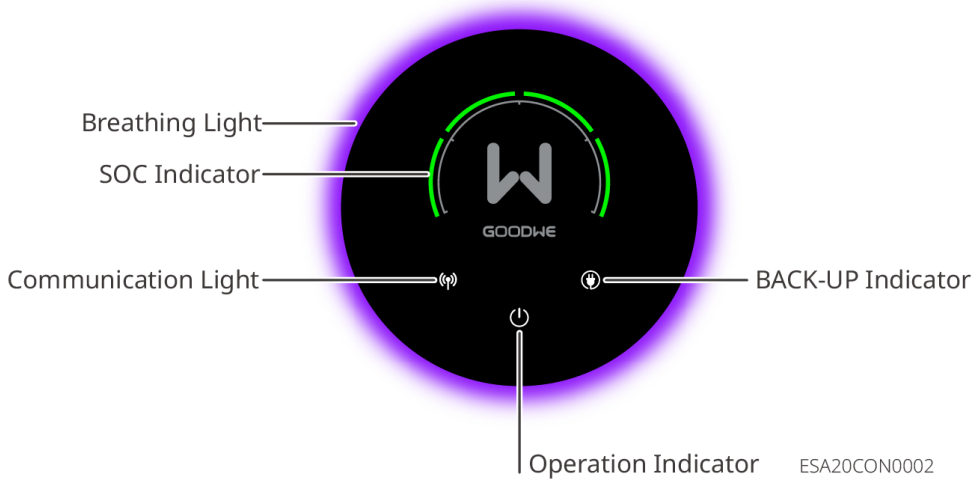

Breathing Light:

- When the system is upgrading: The breathing light is a green running light; the head of the running light is the brightest and the tail is the dimmest. The length of the running light and the upgrade percentage are influenced by the SEMS+ App settings and the device's operational status.
- Except for inverter upgrade, system fault, and inverter power-off states, the breathing light status is influenced by the App settings in the SEMS+ App. For setup instructions, please refer to the SEMS+ App User Manual.

indicator	indicator status	breathing light status	description
		• 3min/always on: blue-purple chasing light stays on • always off: not lit	The inverter is powered on and in standby mode
			The inverter is starting up and in self-test mode
		• 3min: blue-purple breathing for 3min then off • Always on in App: blue-purple breathing stays on • Always off in App: not lit	The inverter is operating normally in grid-tied power generation or off-grid mode

indicator	indicator status	breathing light status	description
		red flashing	system fault
		off	The inverter is powered off
		/	Inverter monitoring module is resetting
			Inverter and communication terminal have not established a connection
			Communication fault between communication terminal and cloud server
			Inverter monitoring is normal
			Inverter monitoring module is not started
			Grid abnormality, inverter BACK-UP port power supply is normal
			Grid normal, inverter BACK-UP port power supply is normal
			BACK-UP port has no power supply
			system upgrade
			system fault

indicator	indicator status	breathing light status	description
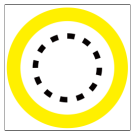			system overload
	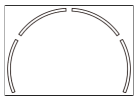		battery has no power
	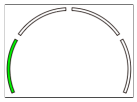		constantly lit: Charge flashing: Discharge battery SOC: 0% < SOC ≤ 25%
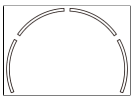	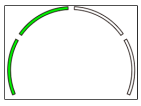		constantly lit: Charge flashing: Discharge battery SOC: 25% < SOC ≤ 50%
	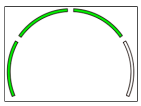		constantly lit: Charge flashing: Discharge battery SOC: 50% < SOC ≤ 75%
	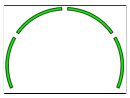		constantly lit: Charge flashing: Discharge battery SOC: 75% < SOC ≤ 100%

6.4.2 Battery Indicators

Button Indicator Light

No.	Green Light	Red Light	Battery System Status	Description
1	Steady On	--	System operating normally	Run
2	Blinking1 time/S		System ready	Standby
	Blinking3 times/S	--	PCS communication lost	--
3	Blinking1 time/2S	--	System alarm	Includes Level 2 faults from the fault list, where under-voltage fault is at Level 2, 3, or 4
4	--	Steady On	System fault	Level 3 and above faults in the fault list (steady on when under-voltage fault is Level 5)

6.4.3 Smart Meter Indicator Lights GM330&GMK330

6.4.3.1 Indicator Light Description

Type	Status	Description
Power Light	Steady On	The meter is powered on, with no RS485 communication.
	Blinking	The meter is powered on, with normal RS485 communication.
	Off	The meter is powered off.
Comm Light	Off	Reserved.
	Blinking	Press and hold the Reset button for ≥5s, and the Power Light and Buy/Sell Power Light blink: The meter is resetting.
	Steady On	buy power from the grid.

Type	Status	Description
 Buy/Sell Power Light	Blinking	Selling power to the grid.
	Off	Not buying or selling power.
 Buy/Sell Power Light (GMK360 only)	Steady On	buy power from the grid.
	Blinking	Selling power to the grid.
	Off	Not buying or selling power.

6.4.4 Smart Dongle Indicator

- **WiFi/LAN Kit-20**

NOTICE

- After double-clicking the Reload button to turn on Bluetooth, the communication indicator light will switch to a single-blink state. Please connect to the SEMS+ App within 5 minutes, otherwise Bluetooth will automatically turn off.
- The communication indicator light's single-blink state only appears after double-clicking the Reload button to turn on Bluetooth.

Indicator	Status	Description
Power indicator 		Steady on: The Smart Communication Stick is powered on.
		Off: The Smart Communication Stick is not powered on.
Communication indicator 		Steady on: Communication is normal in WiFi mode or LAN mode.
		Single blink: The Smart Communication Stick's Bluetooth signal is enabled, waiting to connect to the SEMS+ App.

Indicator	Status	Description
		Two blinks: The Smart Communication Stick has not connected to the router.
		Four blinks: The Smart Communication Stick communicates normally with the router but has not connected to the server.
		Six blinks: The Smart Communication Stick is identifying connected devices.
		Off: The Smart Communication Stick is undergoing a software reset or is not powered on.

Indicator	Color	Status	Description
LAN port communication indicator 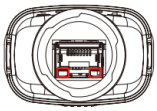	Green	Steady on	100Mbps wired network connection is normal.
		Off	• Network cable is not connected. • 100Mbps wired network connection is abnormal. • 10Mbps wired network connection is normal.
	Yellow	Steady on	10/100Mbps wired network connection is normal, with no communication data being transmitted or received.
		Flashing	Communication data is being transmitted or received.
		Off	Network cable is not connected.

Button	Description
Reload	Hold for 0.5 to 3 seconds to reset the Smart Communication Stick.
	Hold for 6 to 20 seconds to restore the Smart Communication Stick to factory settings.
	Double-click quickly to enable Bluetooth signal (maintained for only 5 minutes).

7 System Commissioning

7.1 Setting Inverter Parameters via App

SEMS+ App is a software used for remote power plant monitoring or local device debugging. It supports installers or owners to:

- Remotely monitor the operation status of the power plant and set operation parameters for the plant and devices.
- Locally connect to devices to view their operation status and set device parameters.

For detailed functions, please refer to the "SEMS+ App User Manual". The user manual can be obtained from the official website or by scanning the QR code below.

SEMS+ App User Manual

7.1.1 Download and Install SEMS+ App

Phone Requirements:

- Operating System: Android 7.0 or above, iOS 15.1 or above.
- Phone must support a web browser and connect to the Internet.
- Phone must support WLAN/Bluetooth functionality.

Download Methods:
Method 1:
Search for "SEMS+" in Google Play, App Store, Huawei, Honor, Xiaomi, OPPO, or vivo app stores to download and install.



SEMS0163

Method 2:

Scan the QR code below to download and install.



SEMS0164

7.2 Monitoring power stations via SEMS+ WEB

SEMS+ WEB is a monitoring platform that can communicate via WiFi or LAN. The following are the common functions of SEMS+ WEB:

1. Manage organization or user information, etc.
2. Add and monitor power station information, etc.
3. Maintain equipment.

For detailed functions, please refer to the SEMS+ WEB User Manual.

SEMS+ WEB User Manual

8 Maintenance

8.1 Power OFF the System

⚠DANGER

- When performing operation and maintenance on equipment in the system, please power off the system. Operating equipment with power on may cause equipment damage or electric shock DANGER.
- After the equipment is powered off, internal components require some time to discharge. Please wait until the equipment is completely discharged according to the label time requirements.
- Restarting the battery should be done using the air switch power-on method.
- When shutting down the battery system, strictly adhere to the battery system power-off requirements to prevent damage to the battery system.

⚠WARNING

During inverter power-off maintenance or in case of a fault, to ensure normal operation of the load, please switch the manual transfer switch to the grid side to engage, allowing the grid to supply power to the load.

NOTICE

- To ensure effective protection of the battery system, keep the cover plate of the battery system switch closed. If the battery system switch will not be used for an extended period, secure it with screws.
- PV strings and "5" are only applicable to the ETA series.

Power off

Single system scenario:

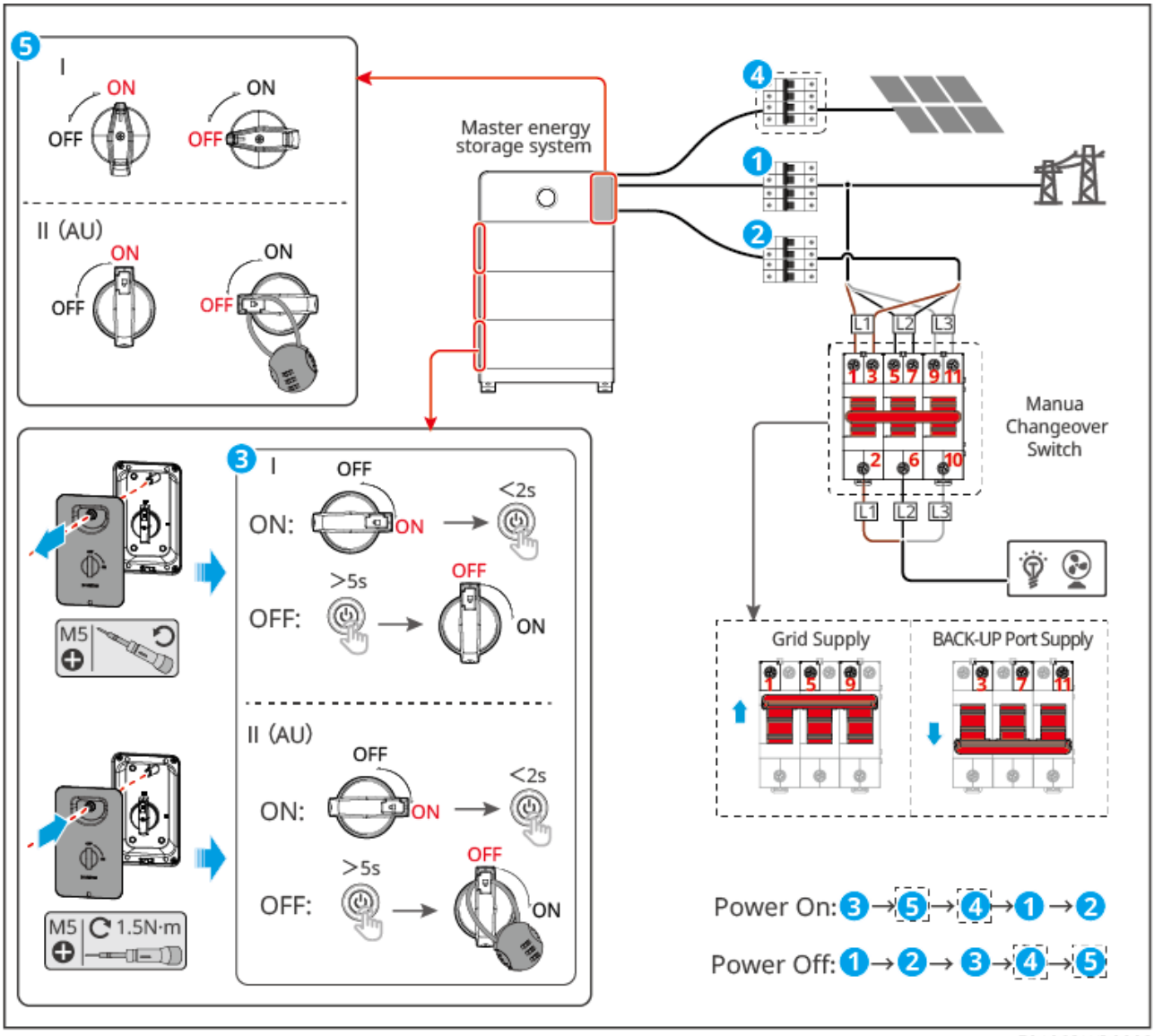

1. Disconnect the BACK-UP circuit breaker.
2. Disconnect the GRID circuit breaker.
3. Press and hold any battery multi-function button for 5 seconds to power off the battery system. If the system contains multiple batteries, this operation will power off all batteries; there is no need to operate them one by one. Finally, disconnect the battery system switch.
4. (Optional) Disconnect the circuit breaker between the PV components and the inverter.
5. Disconnect the DC switch of the inverter. Set the manual transfer switch to the grid side to engage, allowing the grid to supply power to the loads.

Parallel system:

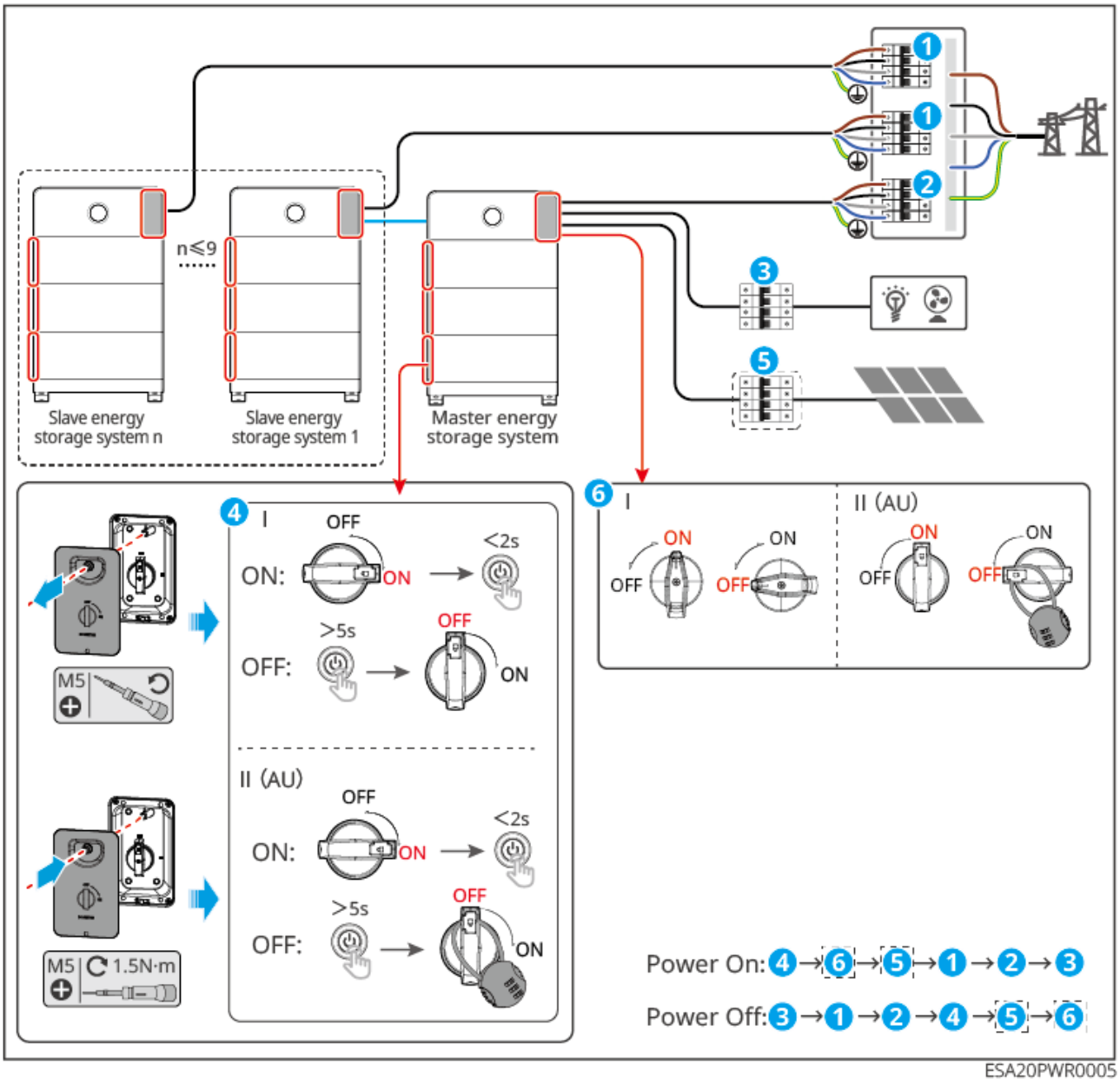

1. Disconnect the BACK-UP circuit breaker.
2. Disconnect the GRID circuit breaker from the inverter.
3. Disconnect the main inverter GRID circuit breaker.
4. Press and hold any battery multi-function button for 5 seconds to power off the battery system. If the system contains multiple batteries, this operation will power off all batteries; there is no need to operate them one by one. Finally, disconnect the battery system switch.
5. (Optional) Disconnect the circuit breaker between the PV components and the inverter.
6. Disconnect the DC switch of the inverter.

8.2 Removing the Equipment

DANGER

- Ensure the device is powered off.
- When operating the device, please wear personal protective equipment.
- When removing wiring terminals, use standard disassembly tools to avoid damaging the terminals or device.
- Unless otherwise specified, the device disassembly method is the reverse order of the installation method, and this document will not elaborate further.

1. Power down the system.
2. Label the cables connected in the system to indicate their types.
3. Disconnect the cables from the Inverter, Battery, and smart meter in the system, such as DC cables, AC cables, Communication cable, and PE cable.
4. Remove equipment such as the smart communication stick, Inverter, Battery, and smart meter.
5. Store the equipment properly. If it will be put into use again later, ensure the storage conditions meet the requirements.

8.3 Disposing of the Equipment

When the equipment can no longer be used and needs to be disposed of, please handle it according to the electrical waste disposal requirements of the regulations in the country/region where the equipment is located. The equipment must not be disposed of as general household waste.

8.4 Routine Maintenance

WARNING

- If any issues that may affect the Battery or hybrid inverter system are discovered, please contact after-sales personnel. Unauthorized disassembly is strictly prohibited.
- If exposed copper wires are found inside the conductive line, do not touch them. High voltage DANGER, please contact after-sales personnel. Unauthorized disassembly is prohibited.
- In case of any other emergencies, please contact the after-sales personnel immediately. Follow their instructions for operation or wait for on-site assistance from the after-sales team.

Maintenance Content	Maintenance method	Maintenance cycle	Maintenance purpose
System cleaning	Check for any foreign objects or dust in the heat sink and air inlet/outlet. Check if the Installation space meets the requirements, and inspect whether there is any debris accumulation around the equipment.	Once every six months	Prevent heat dissipation.
System Installation	Check whether the equipment Installation is secure and whether the fasteners screw are loose. Inspect the equipment for any damage or deformation on the exterior.	Once every six months to once a year	Verify the stability of the Installation equipment.
Electrical connection	Check for loose electrical connections, damaged cable insulation, or exposed copper conductors.	Once every six months to once a year	Verify the reliability of electrical connections.

Maintenance Content	Maintenance method	Maintenance cycle	Maintenance purpose
fan	Check if the fan has any abnormal noise; Check the fan blades for cracks; Check if the fan has abnormal blockage or stalling;	1 time/half year	Prevent fan fault.
Sealing	Check whether the cable entry hole Sealing of the equipment meets the requirements. If the gap is too large or unsealed, resealing is required.	Once per year	Verify that the machine's sealing and waterproof performance are intact.
Battery maintenance	If the Battery has not been used or fully charged for a long time, it is recommended to perform Charge on the Battery regularly.	Once/15 days	ProtectionBattery service life.

Fan maintenance can be specifically referred to the following steps:
There is a fan module on the exterior of Inverter. To clean the fan module more effectively, remove it from the machine before cleaning. The specific steps are as follows:

1. Inverterpower off, refer to8.1.Power OFF the System(Page 145).
2. Wait for the residual voltage in the system to be fully discharged and the fan module to completely stop operating.
3. Use screwdriver dismantle module to lock screw, and remove the entire fan module.
4. Clean the fan using a soft brush, cloth, or vacuum cleaner.

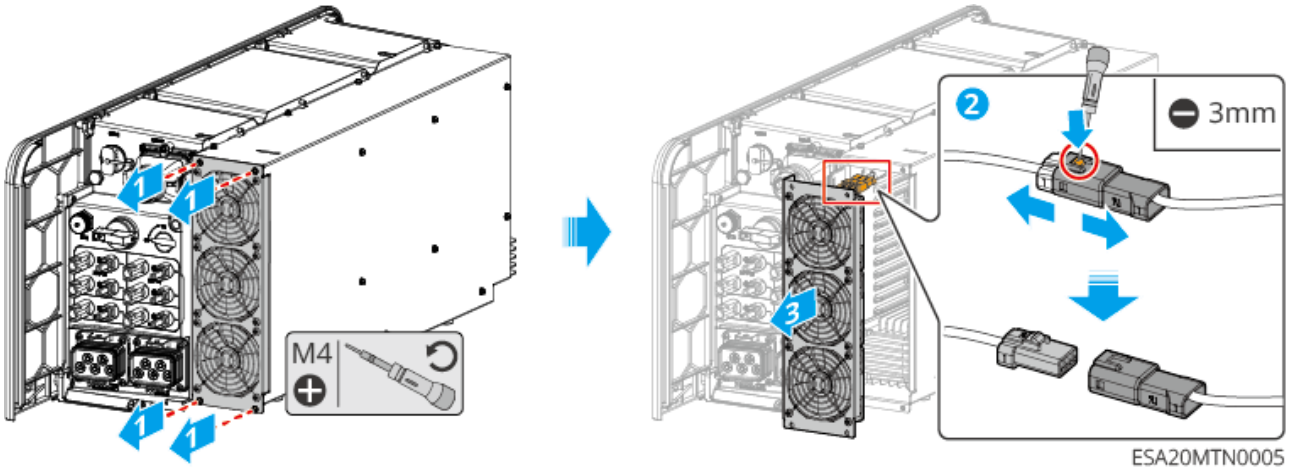

After cleaning, reinstall the fan module back into the machine.

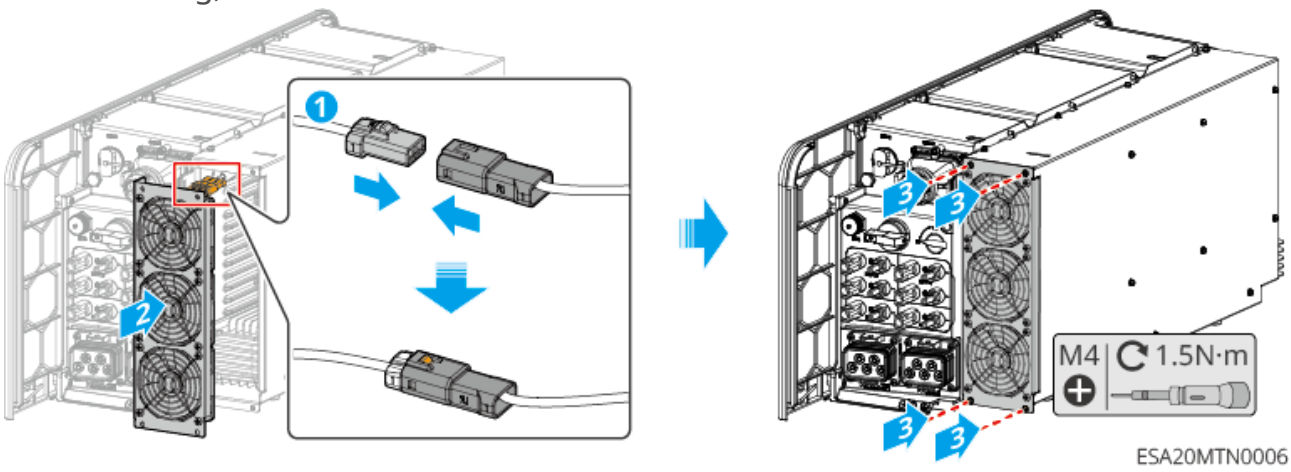

8.5 fault

8.5.1 Viewing Fault/Alarms Information

Detailed information for all faults and alarms in the energy storage system is displayed in the **SEMS+ App and SEMS+ WEB**. If your product experiences an abnormality and no related fault information is seen in the **SEMS+ App or SEMS+ WEB**, please contact the after-sales service center.

- In SEMS+ App

1. Open the SEMS+ App and log in with any account.
2. On the homepage, click "Alarms" to view alarm information for all power plants under the account.

- SEMS+ WEB

1. Open the SEMS+ WEB and log in with any account.
2. On the power plant details interface, click "Alarms" to view all alarm information for the current power plant.

8.5.2 Fault Information and Troubleshooting

Please perform troubleshooting according to the following methods. If the troubleshooting methods cannot help you, please contact the after-sales service center.
When contacting the after-sales service center, please collect the following information to facilitate a quick resolution.

1. Product information, such as: serial number, software version, device installation time, fault occurrence time, fault frequency, etc.
2. Device installation environment, such as: weather conditions, whether components are blocked, have shadows, etc. It is recommended to provide photos, videos, and other files to assist in problem analysis.
3. Grid conditions.

If the system experiences a problem not listed, or if following the instructions still cannot prevent the problem or abnormality, immediately stop system operation and contact your dealer immediately.

No.	fault	Resolution
1	Unable to search for the Smart Communication Stick's wireless signal	1. Ensure no other devices are connected to the Smart Communication Stick's wireless signal. 2. Ensure the Smart Communication Stick is powered normally, with the blue signal light flashing or steady on. 3. Ensure the smart device is within the communication range of the Smart Communication Stick. 4. Refresh the App device list again. 5. Restart the inverter.

No.	fault	Resolution
2	Unable to connect to the Smart Communication Stick's wireless signal	1. Ensure no other devices are connected to the Smart Communication Stick's wireless signal. 2. Restart the inverter or the communication stick, then try connecting to the Smart Communication Stick's wireless signal again. 3. Ensure Bluetooth pairing and encryption were successful.
3	Unable to find the router's SSID	1. Place the router closer to the Smart Communication Stick, or add a WiFi repeater to enhance the WiFi signal. 2. Reduce the number of devices connected to the router.
4	After all configuration is complete, the Smart Communication Stick fails to connect to the router	1. Restart the inverter. 2. Check if the network name, encryption method, and password in the WiFi configuration match those of the router. 3. Restart the router. 4. Place the router closer to the Smart Communication Stick, or add a WiFi repeater to enhance the WiFi signal.
5	After all configuration is complete, the Smart Communication Stick fails to connect to the server	Restart the router and the inverter.

8.5.2.1 Inverter Fault

8.5.2.1.1 Troubleshooting (Fault Codes F01-F40)

Fault Code	Fault Name	Fault Cause	Troubleshooting Suggestions
F01	Grid Power Outage	1. Grid power outage. 2. AC line or AC switch is disconnected.	1. The alarm will disappear automatically after grid power is restored. 2. Check if the AC line or AC switch is disconnected.
F02	Grid Overvoltage Protection	Grid voltage exceeds the allowable range, or the high-voltage duration exceeds the HVRT setting value.	1. If it occurs occasionally, it may be a short-term grid anomaly. The inverter will resume normal operation after detecting a normal grid, requiring no manual intervention. 2. If it occurs frequently, check if the grid voltage is within the allowable range. If not, contact the local power operator. If it is, you also need to modify the grid overvoltage protection point after obtaining consent from the local power operator. 3. If it cannot be restored for a long time, check if the AC side circuit breaker and output cables are properly connected.

Fault Code	Fault Name	Fault Cause	Troubleshooting Suggestions
F03	Grid Undervoltage Protection	Grid voltage is below the allowable range, or the low-voltage duration exceeds the LVRT setting value.	1. If it occurs occasionally, it may be a short-term grid anomaly. The inverter will resume normal operation after detecting a normal grid, requiring no manual intervention. 2. If it occurs frequently, check if the grid voltage is within the allowable range. If not, contact the local power operator. If it is, you also need to modify the grid undervoltage protection point after obtaining consent from the local power operator. 3. If it cannot be restored for a long time, check if the AC side circuit breaker and output cables are properly connected.

Fault Code	Fault Name	Fault Cause	Troubleshooting Suggestions
F04	Grid Rapid Overvoltage Protection	Abnormal grid voltage detection or ultra-high voltage triggers the fault.	1. If it occurs occasionally, it may be a short-term grid anomaly. The inverter will resume normal operation after detecting a normal grid, requiring no manual intervention. 2. If it occurs frequently, check if the grid voltage is within the allowable range. If not, contact the local power operator. If it is, you also need to modify the grid undervoltage protection point after obtaining consent from the local power operator. 3. If it cannot be restored for a long time, check if the AC side circuit breaker and output cables are properly connected.
F05	10min Overvoltage Protection	The moving average of grid voltage within 10min exceeds the safety regulation specified range.	Check if the grid voltage has been operating at a high level for a long time. If it occurs frequently, check if the grid frequency is within the allowable range. If not, contact the local power operator. If it is, you also need to modify the grid 10min overvoltage protection point after obtaining consent from the local power operator.

Fault Code	Fault Name	Fault Cause	Troubleshooting Suggestions
F06	Grid Overfrequency	Grid anomaly: The actual grid frequency is higher than the local grid standard requirements.	1. If it occurs occasionally, it may be a short-term grid anomaly. The inverter will resume normal operation after detecting a normal grid, requiring no manual intervention. 2. If it occurs frequently, check if the grid frequency is within the allowable range. If not, contact the local power operator. If it is, you also need to modify the grid overfrequency protection point after obtaining consent from the local power operator.
F07	Grid Underfrequency	Grid anomaly: The actual grid frequency is lower than the local grid standard requirements.	1. If it occurs occasionally, it may be a short-term grid anomaly. The inverter will resume normal operation after detecting a normal grid, requiring no manual intervention. 2. If it occurs frequently, check if the grid frequency is within the allowable range. If not, contact the local power operator. If it is, you also need to modify the grid overfrequency protection point after obtaining consent from the local power operator.

Fault Code	Fault Name	Fault Cause	Troubleshooting Suggestions
F08	Grid Frequency Instability	Grid anomaly: The rate of change of the actual grid frequency does not comply with local grid standards.	1. If it occurs occasionally, it may be a short-term grid anomaly. The inverter will resume normal operation after detecting a normal grid, requiring no manual intervention. 2. If it occurs frequently, check if the grid frequency is within the allowable range. If not, contact the local power operator.
F09	Anti-islanding Protection	The grid has been disconnected, but grid voltage is maintained due to the presence of loads. Grid connection is stopped according to safety protection requirements.	1. If it occurs occasionally, it may be a short-term grid anomaly. The inverter will resume normal operation after detecting a normal grid, requiring no manual intervention. 2. If it occurs frequently, check if the grid frequency is within the allowable range. If not, contact the local power operator.
F10	LVRT Undervoltage Fault	Grid anomaly: The duration of abnormal grid voltage exceeds the time specified by the HVRT/LVRT.	1. If it occurs occasionally, it may be a short-term grid anomaly. The inverter will resume normal operation after detecting a normal grid, requiring no manual intervention. 2. If it occurs frequently, check if the grid voltage and frequency are within the allowable range and stable. If not, contact the local power operator.

Fault Code	Fault Name	Fault Cause	Troubleshooting Suggestions
F11	HVRT Overvoltage	Grid anomaly: The duration of abnormal grid voltage exceeds the time specified by the HVRT/LVRT.	1. If it occurs occasionally, it may be a short-term grid anomaly. The inverter will resume normal operation after detecting a normal grid, requiring no manual intervention. 2. If it occurs frequently, check if the grid voltage and frequency are within the allowable range and stable. If not, contact the local power operator.
F12	30mA GFCI Protection	The input-to-ground insulation impedance becomes low during inverter operation.	1. If it occurs occasionally, it may be caused by occasional external line anomalies. It will resume normal operation after the fault is cleared, requiring no manual intervention. 2. If it occurs frequently or cannot be restored for a long time, check if the PV string's impedance to ground is too low.
F13	60mA GFCI Protection	The input-to-ground insulation impedance becomes low during inverter operation.	1. If it occurs occasionally, it may be caused by occasional external line anomalies. It will resume normal operation after the fault is cleared, requiring no manual intervention. 2. If it occurs frequently or cannot be restored for a long time, check if the PV string's impedance to ground is too low.

Fault Code	Fault Name	Fault Cause	Troubleshooting Suggestions
F14	150mA GFCI Protection	The input-to-ground insulation impedance becomes low during inverter operation.	1. If it occurs occasionally, it may be caused by occasional external line anomalies. It will resume normal operation after the fault is cleared, requiring no manual intervention. 2. If it occurs frequently or cannot be restored for a long time, check if the PV string's impedance to ground is too low.
F15	GFCI Gradual Change Protection	The input-to-ground insulation impedance becomes low during inverter operation.	1. If it occurs occasionally, it may be caused by occasional external line anomalies. It will resume normal operation after the fault is cleared, requiring no manual intervention. 2. If it occurs frequently or cannot be restored for a long time, check if the PV string's impedance to ground is too low.
F16	DCI Level 1 Protection	The DC component of the inverter output current is higher than the safety regulation or the machine's default allowable range.	1. If it is caused by an external fault, the inverter will automatically resume normal operation after the fault disappears, requiring no manual intervention. 2. If this alarm occurs frequently, affecting the normal power generation of the power station, contact the distributor or after-sales service center.

Fault Code	Fault Name	Fault Cause	Troubleshooting Suggestions
F17	DCI Level 2 Protection	The DC component of the inverter output current is higher than the safety regulation or the machine's default allowable range.	1. If it is caused by an external fault, the inverter will automatically resume normal operation after the fault disappears, requiring no manual intervention. 2. If this alarm occurs frequently, affecting the normal power generation of the power station, contact the distributor or after-sales service center.

Fault Code	Fault Name	Fault Cause	Troubleshooting Suggestions
F18	Low Insulation Resistance	1. PV string shorted to protective earth. 2. The PV string installation environment is long-term humid and the line has poor insulation to ground. 3. Battery port line has low impedance to ground.	1. Check the impedance of the PV string/battery port to protective earth. A value greater than 80kΩ is normal. If the checked value is less than 80kΩ, locate and rectify the short-circuit point. 2. Check if the inverter's protective earth wire is correctly connected. 3. If it is confirmed that the impedance is indeed lower than the default value in rainy/overcast environments, reset the inverter's "Insulation Impedance Protection Point" via the App. For inverters in the Australian and New Zealand markets, the following additional alarm methods apply when an insulation impedance fault occurs: 1. The inverter is equipped with a buzzer. When a fault occurs, the buzzer sounds continuously for 1 minute; if the fault is not resolved, the buzzer sounds again every 30 minutes. 2. If the inverter is added to the monitoring platform and alarm notification methods are set, alarm information can be sent to the customer via email.

Fault Code	Fault Name	Fault Cause	Troubleshooting Suggestions
F19	Grounding Abnormal	1. The inverter's protective earth wire is not connected. 2. When the PV string output is grounded, the inverter output side is not connected to an isolation transformer.	1. Confirm if the inverter's protective earth wire is not properly connected. 2. In scenarios where the PV string output is grounded, confirm if the inverter output side is connected to an isolation transformer.
F20	Hardware Anti-backfeed Protection	Load abnormal fluctuation	1. If it is caused by an external fault, the inverter will automatically resume normal operation after the fault disappears, requiring no manual intervention. 2. If this alarm occurs frequently, affecting the normal power generation of the power station, contact the distributor or after-sales service center.

Fault Code	Fault Name	Fault Cause	Troubleshooting Suggestions
F21	Internal Comm Loss	Sub DSP1 communication timeout - Main DSP, Sub DSP2 communication timeout - Main DSP, Sub DSP2 communication timeout - Sub DSP1, Main DSP communication timeout - Sub DSP1, Main DSP communication timeout - Sub DSP2 or Sub DSP1 communication timeout - Sub DSP2: 1. Chip not powered on 2. Chip program version error	Disconnect the AC output side switch and DC input side switch, wait for 5 minutes, then close the AC output side switch and DC input side switch. If the fault persists, contact the distributor or after-sales service center.

Fault Code	Fault Name	Fault Cause	Troubleshooting Suggestions
		Main DSP can module error, Sub DSP1 can module error or Sub DSP2 can module error: 1. Frame format error 2. Parity check error 3. can bus offline 4. Hardware CRC check error 5. Control bit is receive (transmit) during transmission (reception) 6. Transmission to an unauthorized unit	
F22	Generator Waveform Detection Fault	1. This fault will be displayed continuously when the generator is not connected; 2. When the generator is operating, failure to meet generator safety regulations will trigger this fault.	
F23	Generator Abnormal Connection		
F24	Generator Voltage Low		
F25	Generator Voltage High		
F26	Generator Frequency Low		

Fault Code	Fault Name	Fault Cause	Troubleshooting Suggestions
F27	Generator Frequency High		1. Ignore this fault when the generator is not connected; 2. When this fault occurs due to a generator fault, it is normal. Wait for a period after the generator recovers, and the fault will clear automatically; 3. This fault does not affect the normal operation of off-grid mode. 4. When both the generator and grid are connected and meet safety requirements, the grid has priority for grid connection, and the system will operate in grid-connected status.
F28	Parallel I/O Self-check Abnormal	Parallel communication cable is not securely connected or parallel IO chip is damaged	Check if the parallel communication cable is securely connected, then check if the IO chip is damaged. If yes, replace the IO chip.
F29	Paralell Grid Line Reversed	Some machines' grid lines are connected in reverse with others	Reconnect the grid lines correctly.
F30	AC HCT check Abnormal	AC sensor has sampling abnormality	Disconnect the AC output side switch and DC input side switch, wait for 5 minutes, then close the AC output side switch and DC input side switch. If the fault persists, contact the distributor or after-sales service center.

Fault Code	Fault Name	Fault Cause	Troubleshooting Suggestions
F31	GFCI HCT Check Abnormal	Leakage current sensor has sampling abnormality	Disconnect the AC output side switch and DC input side switch, wait for 5 minutes, then close the AC output side switch and DC input side switch. If the fault persists, contact the distributor or after-sales service center.
F32	Inverter Internal Failure	Inverter has a fault	Disconnect the AC output side switch and DC input side switch, wait for 5 minutes, then close the AC output side switch and DC input side switch. If the fault persists, contact the distributor or after-sales service center.
F33	Flash Read/Write Error	Possible causes: flash content changed; flash lifespan exhausted;	1. Upgrade to the latest program version. 2. Contact the distributor or after-sales service center.
F34	AFCI Check Failure	During the arc self-check process, the arc detection module did not detect an arc fault as expected.	Disconnect the AC output side switch and DC input side switch, wait for 5 minutes, then close the AC output side switch and DC input side switch. If the fault persists, contact the distributor or after-sales service center.

Fault Code	Fault Name	Fault Cause	Troubleshooting Suggestions
F35	Cabinet Overtemperature	Cabinet temperature is too high, possible causes: 1. Inverter installation location is not ventilated. 2. Ambient temperature is too high. 3. Internal fan operation is abnormal.	1. Check if the ventilation at the inverter installation location is good and if the ambient temperature exceeds the maximum allowable ambient temperature range. 2. If ventilation is poor or ambient temperature is too high, improve its ventilation and heat dissipation conditions. 3. If ventilation and ambient temperature are both normal, contact the distributor or after-sales service center.

Fault Code	Fault Name	Fault Cause	Troubleshooting Suggestions
F36	Bus Overvoltage	BUS overvoltage, possible causes: 1. PV voltage is too high; 2. Inverter BUS voltage sampling is abnormal; 3. The isolation effect of the dual-split transformer at the inverter rear end is poor, causing mutual influence when two inverters are connected in parallel, with one inverter reporting DC overvoltage during grid connection;	Disconnect the AC output side switch and DC input side switch, wait for 5 minutes, then close the AC output side switch and DC input side switch. If the fault persists, contact the distributor or after-sales service center.

Fault Code	Fault Name	Fault Cause	Troubleshooting Suggestions
F37	PV Input Overvoltage	PV input voltage is too high, possible cause: PV array configuration error, too many PV panels connected in series per string, causing the string's open-circuit voltage to be higher than the inverter's maximum operating voltage.	Check the series configuration of the corresponding PV array string to ensure the string's open-circuit voltage is not higher than the inverter's maximum operating voltage. After the PV array is correctly configured, the inverter alarm will disappear automatically.
F38	PV Continuous Hardware Overcurrent	1. Module configuration unreasonable. 2. Hardware damaged.	Disconnect the AC output side switch and DC input side switch, wait for 5 minutes, then close the AC output side switch and DC input side switch. If the fault persists, contact the distributor or after-sales service center.
F39	PV Continuous Software Overcurrent	1. Module configuration unreasonable. 2. Hardware damaged.	Disconnect the AC output side switch and DC input side switch, wait for 5 minutes, then close the AC output side switch and DC input side switch. If the fault persists, contact the distributor or after-sales service center.

Fault Code	Fault Name	Fault Cause	Troubleshooting Suggestions
F40, F98	String Reverse Connection (String 1-n) n: Determined based on the actual number of inverter strings.	PV string reverse connection	Check if the string is reversely connected.

8.5.2.1.2 Troubleshooting (Fault Codes F41-F80)

Fault Code	Fault Name	Fault Cause	Troubleshooting Recommendation
F41	Generator Port Overload	1. Off-grid side output exceeds specification requirements. 2. Off-grid side short circuit. 3. Off-grid terminal voltage is too low. 4. When used as a heavy load port, the heavy load exceeds specification requirements.	1. Confirm the off-grid side output voltage, current, power and other data to identify the cause of the problem.

Fault Code	Fault Name	Fault Cause	Troubleshooting Recommendation
F42	DC Arcing Failure (String 1-n) n: Determined by the actual number of inverter strings.	1. Loose DC side connection terminals. 2. Poor contact at DC side connection terminals. 3. Damaged DC cable cores causing poor contact.	1. After the unit reconnects to the grid, check if the voltage and current of each string abnormally decrease or become zero. 2. Check if the DC side terminals are securely connected.
F43	Grid Waveform Abnormal	Utility grid abnormality: Abnormal grid voltage detection triggers the fault.	1. If it occurs occasionally, it may be due to a short-term grid abnormality. The inverter will resume normal operation after detecting a normal grid, requiring no manual intervention. 2. If it occurs frequently, please check if the grid voltage and frequency are within the allowable range and stable. If not, please contact the local power operator.
F44	Grid Phase Loss	Utility grid abnormality: Single-phase voltage dip on the grid.	1. If it occurs occasionally, it may be due to a short-term grid abnormality. The inverter will resume normal operation after detecting a normal grid, requiring no manual intervention. 2. If it occurs frequently, please check if the grid voltage and frequency are within the allowable range and stable. If not, please contact the local power operator.

Fault Code	Fault Name	Fault Cause	Troubleshooting Recommendation
F45	Grid Voltage Imbalance	Excessive difference in grid phase voltages.	1. If it occurs occasionally, it may be due to a short-term grid abnormality. The inverter will resume normal operation after detecting a normal grid, requiring no manual intervention. 2. If it occurs frequently, please check if the grid voltage and frequency are within the allowable range and stable. If not, please contact the local power operator.
F46	Grid Phase Sequence Failure	Inverter and grid wiring abnormality: Wiring is not in positive sequence.	1. Check if the inverter and grid wiring are in positive sequence. The fault will automatically disappear after correct wiring (e.g., swapping any two live wires). 2. If the fault persists despite correct wiring, please contact the dealer or after-sales service center.
F47	Grid Rapid Shutdown Protection	Quickly shuts down output after detecting a grid power outage condition.	The fault automatically disappears after grid power supply is restored.
F48	Grid Neutral Wire Loss (Split-phase Grid)	Loss of neutral wire in a split-phase grid.	1. The alarm automatically disappears after grid power supply is restored. 2. Check if the AC line or AC switch is disconnected.
F49	L-PE Short Circuit	Low impedance or short circuit between output phase line and PE.	Measure the impedance between the output phase line and PE, locate the position with low impedance and repair it.

Fault Code	Fault Name	Fault Cause	Troubleshooting Recommendation
F50	DCV Level 1 Protection	Abnormal load fluctuation.	1. If it is caused by an external fault, the inverter will automatically resume normal operation after the fault disappears, requiring no manual intervention. 2. If this alarm occurs frequently, affecting normal power generation of the plant, please contact the dealer or after-sales service center.
F51	DCV Level 2 Protection	Abnormal load fluctuation.	
F52	Leakage Current (GFCI) Multiple Fault Shutdown	North American safety regulations require manual reset or waiting 24h for recovery after multiple faults, no automatic recovery.	Please check if the PV string-to-ground impedance is too low.
F53	DC Arcing (AFCI) Multiple Fault Shutdown	North American safety regulations require manual reset or waiting 24h for recovery after multiple faults, no automatic recovery.	1. After the unit reconnects to the grid, check if the voltage and current of each string abnormally decrease or become zero. 2. Check if the DC side terminals are securely connected.
F54	External Communication Link Failure	External device communication loss for the inverter. Possible causes: peripheral power issue, communication protocol mismatch, corresponding peripheral not configured, etc.	Determine based on the actual model and enabled detection bits. Peripherals not supported by certain models will not be detected.

Fault Code	Fault Name	Fault Cause	Troubleshooting Recommendation
F55	Back-up Port Overload Fault	Prevents the inverter from continuously outputting overload.	Turn off some off-grid loads to reduce the inverter's off-grid output power.
F56	Back-up Port Overvoltage Fault	Prevents inverter output overvoltage from damaging loads.	1. If it occurs occasionally, it may be caused by load switching and requires no manual intervention. 2. If it occurs frequently, please contact the dealer or after-sales service center.
F57	External Box Fault	Waiting too long for Box relay switching during grid-to-off-grid transition.	1. Check if the Box is working normally. 2. Check if the Box communication wiring is correct.
F58	CT Loss Fault	CT connection wire disconnected (Japanese safety regulation requirement).	Check if the CT wiring is correct.
F59	Parallel CAN Communication Abnormality	Parallel communication cable not securely connected or some units are offline.	Check if all units are powered on and if the parallel communication cables are securely connected.
F60	Parallel Back-up Connection Reversed	Backup wiring of some units is reversed with others.	Reconnect the backup wiring.
F61	Inverter Soft Start Failure	Inverter soft start failure during off-grid cold start.	Check if the inverter module is damaged.

Fault Code	Fault Name	Fault Cause	Troubleshooting Recommendation
F62	AC HCT Failure	HCT sensor abnormality exists.	Disconnect the AC output side switch and DC input side switch, wait 5 minutes, then close the AC output side switch and DC input side switch. If the fault persists, please contact the dealer or after-sales service center.
F63	GFCI HCT Failure	Leakage current sensor abnormality exists.	Disconnect the AC output side switch and DC input side switch, wait 5 minutes, then close the AC output side switch and DC input side switch. If the fault persists, please contact the dealer or after-sales service center.
F64	Inverter Internal Failure	Inverter fault exists.	Disconnect the AC output side switch and DC input side switch, wait 5 minutes, then close the AC output side switch and DC input side switch. If the fault persists, please contact the dealer or after-sales service center.
F65	AC Terminal Overtemperature	AC terminal temperature is too high. Possible causes: 1. Inverter installation location lacks ventilation. 2. Ambient temperature is too high. 3. Internal fan operation is abnormal.	1. Check if the ventilation at the inverter installation location is adequate and if the ambient temperature exceeds the maximum allowable range. 2. If ventilation is poor or ambient temperature is too high, improve its ventilation and heat dissipation conditions. 3. If both ventilation and ambient temperature are normal, please contact the dealer or after-sales service center.

Fault Code	Fault Name	Fault Cause	Troubleshooting Recommendation
F66	INV Module Overtemperature	Inverter module temperature is too high. Possible causes: 1. Inverter installation location lacks ventilation. 2. Ambient temperature is too high. 3. Internal fan operation is abnormal.	1. Check if the ventilation at the inverter installation location is adequate and if the ambient temperature exceeds the maximum allowable range. 2. If ventilation is poor or ambient temperature is too high, improve its ventilation and heat dissipation conditions. 3. If both ventilation and ambient temperature are normal, please contact the dealer or after-sales service center.
F67	Boost Module Overtemperature	Boost module temperature is too high. Possible causes: 1. Inverter installation location lacks ventilation. 2. Ambient temperature is too high. 3. Internal fan operation is abnormal.	1. Check if the ventilation at the inverter installation location is adequate and if the ambient temperature exceeds the maximum allowable range. 2. If ventilation is poor or ambient temperature is too high, improve its ventilation and heat dissipation conditions. 3. If both ventilation and ambient temperature are normal, please contact the dealer or after-sales service center.

Fault Code	Fault Name	Fault Cause	Troubleshooting Recommendation
F68	AC Capacitor Overtemperature	Output filter capacitor temperature is too high. Possible causes: 1. Inverter installation location lacks ventilation. 2. Ambient temperature is too high. 3. Internal fan operation is abnormal.	1. Check if the ventilation at the inverter installation location is adequate and if the ambient temperature exceeds the maximum allowable range. 2. If ventilation is poor or ambient temperature is too high, improve its ventilation and heat dissipation conditions. 3. If both ventilation and ambient temperature are normal, please contact the dealer or after-sales service center.
F69	PV IGBT Short Circuit Fault	Possible causes: 1. IGBT short circuit. 2. Inverter sampling circuit abnormality.	Disconnect the AC output side switch and DC input side switch, wait 5 minutes, then close the AC output side switch and DC input side switch. If the fault persists, please contact the dealer or after-sales service center.
F70	PV IGBT Open Circuit Fault	1. Software issue causing no PWM generation. 2. Drive circuit abnormality. 3. IGBT open circuit.	
F71	NTC Abnormality	NTC temperature sensor abnormality.	Disconnect the AC output side switch and DC input side switch, wait 5 minutes, then close the AC output side switch and DC input side switch. If the fault persists, please contact the dealer or after-sales service center.

Fault Code	Fault Name	Fault Cause	Troubleshooting Recommendation
F72	PWM Abnormal	Abnormal PWM waveform detected.	Disconnect the AC output side switch and DC input side switch, wait 5 minutes, then close the AC output side switch and DC input side switch. If the fault persists, please contact the dealer or after-sales service center.
F73	CPU Interrupt Abnormality	CPU interrupt abnormality occurred.	Disconnect the AC output side switch and DC input side switch, wait 5 minutes, then close the AC output side switch and DC input side switch. If the fault persists, please contact the dealer or after-sales service center.
F74	Microelectronics Fault	Functional safety detection detected an abnormality.	Disconnect the AC output side switch and DC input side switch, wait 5 minutes, then close the AC output side switch and DC input side switch. If the fault persists, please contact the dealer or after-sales service center.
F75	PV HCT Fault	Boost current sensor abnormality.	Disconnect the AC output side switch and DC input side switch, wait 5 minutes, then close the AC output side switch and DC input side switch. If the fault persists, please contact the dealer or after-sales service center.
F76	1.5V Reference Abnormality	Reference circuit fault.	Disconnect the AC output side switch and DC input side switch, wait 5 minutes, then close the AC output side switch and DC input side switch. If the fault persists, please contact the dealer or after-sales service center.
F77	0.3V Reference Abnormality	Reference circuit fault.	

Fault Code	Fault Name	Fault Cause	Troubleshooting Recommendation
F78	CPLD Version Recognition Error	CPLD version recognition error.	Disconnect the AC output side switch and DC input side switch, wait 5 minutes, then close the AC output side switch and DC input side switch. If the fault persists, please contact the dealer or after-sales service center.
F79	CPLD Communication Fault	CPLD and DSP communication content error or timeout.	Disconnect the AC output side switch and DC input side switch, wait 5 minutes, then close the AC output side switch and DC input side switch. If the fault persists, please contact the dealer or after-sales service center.
F80	Model Identification Fault	Fault related to model identification error.	Disconnect the AC output side switch and DC input side switch, wait 5 minutes, then close the AC output side switch and DC input side switch. If the fault persists, please contact the dealer or after-sales service center.

8.5.2.1.3 Troubleshooting (Fault Codes F81-F121)

Fault Code	Fault Name	Fault Cause	Troubleshooting Recommendation
F81	P-Bus Overvoltage		Disconnect the AC output side switch and the DC input side switch, wait for 5 minutes, then close the AC output side switch and the DC input side switch. If the fault persists, please contact the dealer or after-sales service center.

Fault Code	Fault Name	Fault Cause	Troubleshooting Recommendation
F82	N-Bus Overvoltage	BUS overvoltage, possible causes: 1. PV voltage is too high; 2. Inverter BUS voltage sampling is abnormal; 3. Poor isolation effect of the split-phase transformer at the inverter output, causing mutual interference when two inverters are grid-connected, with one inverter reporting DC overvoltage during grid connection;	
F83	Bus Overvoltage (Sub CPU1)		Disconnect the AC output side switch and the DC input side switch, wait for 5 minutes, then close the AC output side switch and the DC input side switch. If the fault persists, please contact the dealer or after-sales service center.
F84	P-Bus Overvoltage (Sub CPU1)		

Fault Code	Fault Name	Fault Cause	Troubleshooting Recommendation
F85	N-Bus Overvoltage (Sub CPU1)	BUS overvoltage, possible causes: 1. PV voltage is too high; 2. Inverter BUS voltage sampling is abnormal; 3. Poor isolation effect of the split-phase transformer at the inverter output, causing mutual interference when two inverters are grid-connected, with one inverter reporting DC overvoltage during grid connection;	
F86	Bus Overvoltage (Sub CPU2)		Disconnect the AC output side switch and the DC input side switch, wait for 5 minutes, then close the AC output side switch and the DC input side switch. If the fault persists, please contact the dealer or after-sales service center.
F87	P-Bus Overvoltage (Sub CPU2)		

Fault Code	Fault Name	Fault Cause	Troubleshooting Recommendation
F88	N-Bus Overvoltage (Sub CPU2)	BUS overvoltage, possible causes: 1. PV voltage is too high; 2. Inverter BUS voltage sampling is abnormal; 3. Poor isolation effect of the split-phase transformer at the inverter output, causing mutual interference when two inverters are grid-connected, with one inverter reporting DC overvoltage during grid connection;	
F89	P-Bus Overvoltage(CPLD)		Disconnect the AC output side switch and the DC input side switch, wait for 5 minutes, then close the AC output side switch and the DC input side switch. If the fault persists, please contact the dealer or after-sales service center.

Fault Code	Fault Name	Fault Cause	Troubleshooting Recommendation
F90	N-Bus Overvoltage(CPLD)	BUS overvoltage, possible causes: 1. PV voltage is too high; 2. Inverter BUS voltage sampling is abnormal; 3. Poor isolation effect of the split-phase transformer at the inverter output, causing mutual interference when two inverters are grid-connected, with one inverter reporting DC overvoltage during grid connection;	
F91	FlyCap Software Overvoltage	FlyCap overvoltage, possible causes: 1. PV voltage is too high; 2. Inverter FlyCap voltage sampling is abnormal;	Disconnect the AC output side switch and the DC input side switch, wait for 5 minutes, then close the AC output side switch and the DC input side switch. If the fault persists, please contact the dealer or after-sales service center.
F92	FlyCap Hardware Overvoltage		

Fault Code	Fault Name	Fault Cause	Troubleshooting Recommendation
F93	FlyCap Undervoltage	FlyCap undervoltage, possible causes: 1. PV energy is insufficient; 2. Inverter FlyCap voltage sampling is abnormal;	Disconnect the AC output side switch and the DC input side switch, wait for 5 minutes, then close the AC output side switch and the DC input side switch. If the fault persists, please contact the dealer or after-sales service center
F94	FlyCap Precharge Failure	FlyCap precharge failure, possible causes: 1. PV energy is insufficient; 2. Inverter FlyCap voltage sampling is abnormal;	Disconnect the AC output side switch and the DC input side switch, wait for 5 minutes, then close the AC output side switch and the DC input side switch. If the fault persists, please contact the dealer or after-sales service center
F95	FlyCap Precharge Abnormal	1. Control loop parameters are unreasonable 2. Hardware damage	Disconnect the AC output side switch and the DC input side switch, wait for 5 minutes, then close the AC output side switch and the DC input side switch. If the fault persists, please contact the dealer or after-sales service center

Fault Code	Fault Name	Fault Cause	Troubleshooting Recommendation
F96, F97	String Overcurrent(String1-n) n: Determined based on the actual number of inverter strings	Possible causes: 1. String overcurrent; 2. String current sensor is abnormal	Disconnect the AC output side switch and the DC input side switch, wait for 5 minutes, then close the AC output side switch and the DC input side switch. If the fault persists, please contact the dealer or after-sales service center
F99, F100	String Missing(String1-n) n: Determined based on the actual number of inverter strings	String fuse is open (if present)	Check if the fuse is open.
F101	Battery 1 Precharge fault	Battery 1 precharge circuit fault (precharge resistor burned out, etc.)	Check if the precharge circuit is in good condition, and whether the battery voltage matches the bus voltage after the battery is powered on. If not, please contact the dealer or after-sales service center.
F102	Battery 1 Relay Failure	Battery 1 relay cannot operate normally	After the battery is powered on, check if the battery relay is working, and if a closing sound is heard. If it does not operate, please contact the dealer or after-sales service center.

Fault Code	Fault Name	Fault Cause	Troubleshooting Recommendation
F103	Battery 1 Connection Overvoltage	Battery 1 connection voltage exceeds the machine's rated range	Confirm if the battery voltage is within the machine's rated range.
F104	Battery 2 Precharge fault	Battery 2 precharge circuit fault (precharge resistor burned out, etc.)	Check if the precharge circuit is in good condition, and whether the battery voltage matches the bus voltage after the battery is powered on. If not, please contact the dealer or after-sales service center.
F105	Battery 2 Relay Failure	Battery 2 relay cannot operate normally	After the battery is powered on, check if the battery relay is working, and if a closing sound is heard. If it does not operate, please contact the dealer or after-sales service center.
F106	Battery 2 Connection Overvoltage	Battery 2 connection voltage exceeds the machine's rated range	Confirm if the battery voltage is within the machine's rated range.
F107	On-grid PWM Sync Failure	Abnormalities occurred during carrier synchronization grid connection	1. Check if the synchronization cable connection is normal 2. Check if the master/slave settings are normal; 3. Disconnect the AC output side switch and the DC input side switch, wait for 5 minutes, then close the AC output side switch and the DC input side switch. If the fault persists, please contact the dealer or after-sales service center.
F108	DSP Communication fault	-	-

Fault Code	Fault Name	Fault Cause	Troubleshooting Recommendation
F109	External STS fault	Abnormal cable connection between the inverter and the STS	Check if the wiring sequence of the harness between the inverter and the STS corresponds correctly one by one.
F110	Export Limit Protection	1. Inverter reports error and disconnects from grid 2. meter communication is unstable 3. Reverse power flow condition occurs	1. Check if the inverter has other error messages. If yes, perform targeted troubleshooting; 2. Check if the meter connection is reliable; 3.If this alarm occurs frequently, affecting normal power generation of the power station, please contact the dealer or after-sales service center.
F111	Bypass Overload	-	-
F112	Black Start Failure	-	-
F113	Offgrid AC Ins Volt High	-	-
F114	Relay Failure2	Relay abnormality, causes: 1. Relay abnormality (relay short circuit) 2. Relay sampling circuit is abnormal. 3. AC side wiring is abnormal (there may be poor connection or short circuit)	Disconnect the AC output side switch and the DC input side switch, wait for 5 minutes, then close the AC output side switch and the DC input side switch. If the fault persists, please contact the dealer or after-sales service center.

Fault Code	Fault Name	Fault Cause	Troubleshooting Recommendation
F115	SVG Precharge Disabled	SVG precharge hardware failure	Contact the dealer or after-sales service center.
F116	Nighttime SVG PID Prevention fault	PID prevention hardware abnormality	
F117	DSP Version Recognition Error	DSP software version recognition error	Disconnect the AC output side switch and the DC input side switch, wait for 5 minutes, then close the AC output side switch and the DC input side switch. If the fault persists, please contact the dealer or after-sales service center.
F118	MOS Continuous Overvoltage	1. Software issue causing inverter drive to turn off earlier than flyback drive: 2. Inverter drive circuit abnormal causing failure to turn on: 3. PV voltage is too high; 4. Mos voltage sampling is abnormal;	Disconnect the AC output side switch and the DC input side switch, wait for 5 minutes, then close the AC output side switch and the DC input side switch. If the fault persists, please contact the dealer or after-sales service center.
F119	Bus Short Circuit fault	Hardware damage	If the inverter remains offline after a BUS short circuit fault occurs, please contact the dealer or after-sales service center.

Fault Code	Fault Name	Fault Cause	Troubleshooting Recommendation
F120	Bus Sampling Abnormality	1. BUS voltage sampling hardware fault	Disconnect the AC output side switch and the DC input side switch, wait for 5 minutes, then close the AC output side switch and the DC input side switch. If the fault persists, please contact the dealer or after-sales service center.
F121	DC Side Sampling Abnormality	1. BUS voltage sampling hardware fault 2. Battery voltage sampling hardware fault 3. Dcrly relay fault	Disconnect the AC output side switch and the DC input side switch, wait for 5 minutes, then close the AC output side switch and the DC input side switch. If the fault persists, please contact the dealer or after-sales service center.

Fault Code	Fault Name	Fault Cause	Troubleshooting Recommendation
F122	PV Access Mode Setting Error	There are three PV access modes, taking four MPPT channels as an example: 1. Parallel mode: i.e., AAAA mode (same source mode), PV1-PV4 are from the same source, all 4 PV channels are connected to the same solar panel 2. Partial parallel mode: i.e., AACC mode, PV1 and PV2 are connected from the same source, PV3 and PV4 are connected from the same source 3. Independent mode: i.e., ABCD mode (different sources), PV1, PV2, PV3, PV4 are connected independently, each of the 4 PV channels is connected to one solar panel If the actual PV	Check if the PV access mode is set correctly (ABCD, AACC, AAAA), reset the PV access mode correctly. 1. Confirm that the actual connected PV channels are correctly wired; 2. If the PV is correctly connected, check the currently set "PV Access Mode" via the APP or screen to see if it corresponds to the actual access mode; 3. If the currently set "PV Access Mode" does not match the actual access mode, use the APP or screen to set the "PV Access Mode" to the mode consistent with the actual situation. After setting, disconnect the PV and AC power supply and restart; 4. After setting, if the current "PV Access Mode" matches the actual access mode, but this fault still occurs, please contact the dealer or after-sales service center.

Fault Code	Fault Name	Fault Cause	Troubleshooting Recommendation
		access mode does not match the PV access mode set on the device, this fault will be reported	

8.5.2.1.4 Troubleshooting (Fault Codes F122-F163)

Fault Code	Fault Name	Fault Cause	Troubleshooting Suggestion
F123	Multi-channel PV Phase Error	PV Input Mode Setting Error	Check if the PV Access Mode is set correctly (ABCD, AACC, AAAA). Reset the PV Access Mode correctly. 1. Confirm that each actual PV channel is correctly connected. 2. If the PV is correctly connected, check via APP or screen whether the currently set "PV Access Mode" corresponds to the actual connection mode. 3. If the currently set "PV Access Mode" does not match the actual connection mode, use the APP or screen to set the "PV Access Mode" to the mode consistent with the actual situation. After setting, disconnect and restart the PV and AC power supply. 4. After setting, if the current "PV Access Mode" matches the actual connection mode but this fault still occurs, please contact the dealer or after-sales service center.
F124	Battery 1 Reverse Connection fault	Battery 1 Positive and Negative Poles Reversed	Check if the polarities of the Battery and the machine terminals are consistent.
F125	Battery 2 Reverse Connection fault	Battery 2 Positive and Negative Poles Reversed	Check if the polarities of the Battery and the machine terminals are consistent.

Fault Code	Fault Name	Fault Cause	Troubleshooting Suggestion
F126	Abnormal Battery Connection	Abnormal Battery Connection	Check if the Battery is working normally.
F127	BAT Overtemperature	Battery temperature is too high. Possible causes: 1. Poor ventilation at the inverter installation location. 2. Ambient temperature is too high. 3. Internal fan operation is abnormal.	Disconnect the AC output side switch and DC input side switch. After 5 minutes, close the AC output side switch and DC input side switch. If the fault persists, please contact the dealer or after-sales service center.
F128	Ref Voltage Abnormal	Reference circuit fault	Disconnect the AC output side switch and DC input side switch. After 5 minutes, close the AC output side switch and DC input side switch. If the fault persists, please contact the dealer or after-sales service center.
F129	Cabinet Under Temperature	Cabinet temperature is too low. Possible cause: Ambient temperature is too low.	Disconnect the AC output side switch and DC input side switch. After 5 minutes, close the AC output side switch and DC input side switch. If the fault persists, please contact the dealer or after-sales service center.
F130	AC Side SPD fault	AC Side Surge Protective Device Failure	Replace the AC side surge protective device.
F131	DC Side SPD fault	DC Side Surge Protective Device Failure	Replace the DC side surge protective device.

Fault Code	Fault Name	Fault Cause	Troubleshooting Suggestion
F132	Internal Fan Abnormal	Internal fan abnormal. Possible causes: 1. Abnormal fan power supply. 2. Mechanical fault (stall). 3. Fan aging or damage.	Disconnect the AC output side switch and DC input side switch. After 5 minutes, close the AC output side switch and DC input side switch. If the fault persists, please contact the dealer or after-sales service center.
F133	External Fan Abnormal	External fan abnormal. Possible causes: 1. Abnormal fan power supply. 2. Mechanical fault (stall). 3. Fan aging or damage.	Disconnect the AC output side switch and DC input side switch. After 5 minutes, close the AC output side switch and DC input side switch. If the fault persists, please contact the dealer or after-sales service center.
F134	PID Diagnosis Abnormal	PID hardware fault or PID paused due to high PV voltage.	No action required for PID pause warning caused by high PV voltage. For PID hardware fault, clear the PID fault by turning the PID switch off and then on, and replace the PID device.

Fault Code	Fault Name	Fault Cause	Troubleshooting Suggestion
F135	Trip-Switch Trip Warning	Possible causes: Overcurrent or PV reverse connection caused the trip-switch to trip.	Contact the dealer or after-sales service center. The tripping reason was due to PV short circuit or reverse connection. Check if there is a history of PV short circuit warning or PV reverse connection warning. If present, maintenance personnel need to check the corresponding PV condition. After checking and confirming no fault, you can manually close the trip-switch and clear this warning via the APP interface's clear historical fault operation.
F136	Historical PV IGBT Short Circuit Warning	Possible causes: Overcurrent caused the trip-switch to trip.	Contact the dealer or after-sales service center. Maintenance personnel need to check the Boost hardware and external string for faults according to the historical PV short circuit warning subcode. After checking and confirming no fault, this warning can be cleared via the APP interface's clear historical fault operation.

Fault Code	Fault Name	Fault Cause	Troubleshooting Suggestion
F137, F138	Historical PV Reverse Connection Warning (String 1-n) (n: determined by the actual number of inverter strings)	Possible causes: PV reverse connection caused the trip-switch to trip.	Contact the dealer or after-sales service center. Maintenance personnel need to check if the corresponding string has a reverse connection according to the historical PV reverse connection warning subcode, and check if there is a voltage difference in the PV panel configuration. After checking and confirming no fault, this warning can be cleared via the APP interface's clear historical fault operation.
F139	Flash Read/Write Error Warning	Possible causes: 1. Flash content changed. 2. Flash end of life reached.	1. Upgrade to the latest firmware. 2. Contact the dealer or after-sales service center.
F140	Meter Comm Loss	This warning may only occur after enabling anti-backflow function. Possible causes: 1. Meter not connected. 2. Incorrect wiring of the communication cable between the meter and the inverter.	Check the meter wiring and connect the meter correctly. After checking, if the fault persists, please contact the dealer or after-sales service center.
F141	PV Panel Type Identification Failure	PV panel identification hardware abnormal	Contact the dealer or after-sales service center.

Fault Code	Fault Name	Fault Cause	Troubleshooting Suggestion
F142	PV String Mismatch	PV string mismatch. Two strings under the same MPPT have different open-circuit voltage configurations.	Check the open-circuit voltage of the two strings. Configure strings with the same open-circuit voltage under the same MPPT. Prolonged string mismatch poses a safety hazard.
F143	CT Not Connected	CT not connected	Check CT wiring.
F144	CT Reverse Connection	CT reverse connection	Check CT wiring.
F145	PE Loss	Ground wire not connected	Check the ground wire.
F146	String Terminal High Temperature (String 1~8)	Register 37176 PV terminal temperature warning subcode 1 is set.	-
F147	String Terminal High Temperature (String 9~16)	Register 37177 PV terminal temperature warning subcode 2 is set.	-
F148	String Terminal High Temperature (String 17~20)	Register 37178 PV terminal temperature warning subcode 3 is set.	-

Fault Code	Fault Name	Fault Cause	Troubleshooting Suggestion
F149	Historical PV Reverse Connection Warning (String 33~48)	Possible causes: PV reverse connection caused the trip-switch to trip.	Contact the dealer or after-sales service center. Maintenance personnel need to check if the corresponding string has a reverse connection according to the historical PV reverse connection warning subcode, and check if there is a voltage difference in the PV panel configuration. After checking and confirming no fault, this warning can be cleared via the APP interface's clear historical fault operation.
F150	Battery 1 Low Voltage	Battery voltage is below the set value.	-
F151	Battery 2 Low Voltage	Battery voltage is below the set value.	-
F152	Low Voltage of Battery Power	Battery not in charging mode, voltage below shutdown voltage.	-
F153	Battery 1 High Voltage	-	-
F154	Battery 2 High Voltage	-	-

Fault Code	Fault Name	Fault Cause	Troubleshooting Suggestion
F155	Online Low Insulation Resistance	1. Photovoltaic string short circuit to protective earth. 2. The photovoltaic string installation environment is humid for a long time and the line has poor insulation to ground.	1. Check the impedance of the photovoltaic string to the protective earth. If a short circuit is found, please rectify the short circuit point. 2. Check if the inverter's protective earth wire is correctly connected. 3. If it is confirmed that the impedance is indeed below the default value in rainy conditions, please reset the "Insulation Resistance Protection Point".
F156	Micro-grid Overload Warning	backup terminal input current is too high.	Occasional occurrence requires no action. If this warning occurs frequently, please contact the dealer or after-sales service center.
F157	Manual Reset	-	-
F158	Generator Phase Sequence Abnormal	-	-
F159	Multiplexed Port Configuration Abnormal	Multiplexed (generator) port is configured for micro-grid or large load, but a generator is actually connected.	Use the APP to change the multiplexed (generator) port configuration.
F160	EMS Forced Off-grid	EMS issued forced off-grid command, but off-grid function is not enabled.	Enable the off-grid function.

Fault Code	Fault Name	Fault Cause	Troubleshooting Suggestion
F161	Passive Anti-islanding Protection	-	-
F162	Grid Type Fault	Actual grid type (two-phase or split-phase) does not match the set safety standard.	Switch to the corresponding safety standard according to the actual grid type.
F163	Grid Phase Instability	Grid abnormal: The rate of change of grid voltage phase does not comply with local grid standards.	1. If it occurs occasionally, it may be a temporary grid anomaly. The inverter will resume normal operation after detecting a normal grid, requiring no manual intervention. 2. If it occurs frequently, please check if the grid frequency is within the allowable range. If not, please contact the local power operator.

8.5.2.1.5 Fault Symptom Handling

Fault Name	Fault Cause	Troubleshooting Recommendation
Generator Failure	1. This fault will persist if no generator is connected. 2. Triggered when the generator's operation does not meet safety regulations.	1. If no generator is connected, ignore this fault. 2. It is normal for this fault to appear when the generator malfunctions. Wait for a period after the generator recovers, and the fault will clear automatically. 3. This fault does not affect the normal operation of off-grid mode. 4. When both generator and grid are connected and meet safety requirements, grid connection takes priority, and the system will operate in grid-connected mode.
BMS Status Bit Error	BMS module failure	Disconnect the AC output side switch and DC input side switch. After 5 minutes, reconnect the AC output side switch and DC input side switch. If the fault persists, please contact the dealer or after-sales service center.
Ambient Overtemperature	1. Poor machine ventilation 2. Hot air flows back to the ambient temperature sampling point	Disconnect the AC output side switch and DC input side switch. After 5 minutes, reconnect the AC output side switch and DC input side switch. If the fault persists, please contact the dealer or after-sales service center.

Fault Name	Fault Cause	Troubleshooting Recommendation
PV Terminal Overtemperature	PV terminal overtemperature, possible causes: 1. Poor ventilation at the inverter installation location. 2. Ambient temperature is too high. 3. Internal fan abnormal operation.	1. Check if the ventilation at the inverter installation location is adequate and if the ambient temperature exceeds the maximum allowable range. 2. If ventilation is poor or ambient temperature is too high, please improve ventilation and heat dissipation conditions. 3. If both ventilation and ambient temperature are normal, please contact the dealer or after-sales service center.
BAT Terminal Overtemperature	BAT terminal overtemperature, possible causes: 1. Poor ventilation at the inverter installation location. 2. Ambient temperature is too high.	1. Check if the ventilation at the inverter installation location is adequate and if the ambient temperature exceeds the maximum allowable range. 2. If ventilation is poor or ambient temperature is too high, please improve ventilation and heat dissipation conditions. 3. If both ventilation and ambient temperature are normal, please contact the dealer or after-sales service center.
AC Terminal Overtemperature Warning	AC terminal overtemperature, possible causes: 1. Poor ventilation at the inverter installation location. 2. Ambient temperature is too high. 3. Internal fan abnormal operation.	

Fault Name	Fault Cause	Troubleshooting Recommendation
BAT Terminal Overtemperature Warning	BAT terminal overtemperature, possible causes: 1. Poor ventilation at the inverter installation location. 2. Ambient temperature is too high.	1. Check if the ventilation at the inverter installation location is adequate and if the ambient temperature exceeds the maximum allowable range. 2. If ventilation is poor or ambient temperature is too high, please improve ventilation and heat dissipation conditions. 3. If both ventilation and ambient temperature are normal, please contact the dealer or after-sales service center.
Three-phase on-grid fault	Incorrect three-phase external wiring	Re-wire the connections.
External STS Failure	Abnormal cable connection between inverter and STS	Check if the wiring sequence of the harness between the inverter and the STS corresponds correctly one by one.

Fault Name	Fault Cause	Troubleshooting Recommendation
Parallel Comm Timeout Shutdown	In parallel mode, if a slave unit fails to communicate with the master unit for more than 400 seconds.	Check if the parallel communication harness is securely connected. Check if slave addresses are duplicated.
Three-phase off-grid phase loss fault	Phase loss in a three-phase system group.	1. Check if all inverters are powered on. 2. Check if each phase of the three-phase group is connected to an inverter.

Fault Name	Fault Cause	Troubleshooting Recommendation
EPO	External hardware EPO button triggered or remote EPO command triggered.	1. If it was actively triggered via remote shutdown, it can be ignored. 2. If not actively triggered, please contact the dealer or after-sales service center.
High Combustible Gas Concentration	Automatically triggered when the combustible gas device detects a concentration of 20% LEL or higher.	1. After the fault occurs, the unit will automatically open the air damper to exhaust and reduce the concentration. The fault will clear automatically after the concentration remains below 5% LEL for 15 minutes. 2. If a cluster-level fire protection fault is triggered after this fault occurs, the air damper will automatically close. Confirm the damper status within 30s to ensure cluster-level fire protection operates in a sealed space. 3. Please contact the dealer or after-sales service center.
Combustible Gas Device Air Damper Open Signal Mismatch with Feedback	The control signal to open the air damper does not match the feedback signal.	1. Check the harness signal connection for issues. 2. Please contact the dealer or after-sales service center.
One-Touch Shutdown	Check via the App if the one-touch shutdown function is enabled.	Disable the one-touch shutdown.
Offline Shutdown	-	-

Fault Name	Fault Cause	Troubleshooting Recommendation
Remote Shutdown	-	-
On-Grid SPD Fault	-	1. Try restarting the unit and observe if the fault clears; 2. If the fault persists after restart, please contact the dealer or after-sales service center.
Off-Grid SPD Fault	-	1. Try restarting the unit and observe if the fault clears; 2. If the fault persists after restart, please contact the dealer or after-sales service center.
Child Node Communication Failure	Internal Comm Abnormal	1. Try restarting the unit and observe if the fault clears; 2. If the fault persists after restart, please contact the dealer or after-sales service center.
Dehumidifier Communication Fault	Communication link abnormality between the dehumidifier and the LC control box.	1. Check the communication harness link, observe if the fault clears; 2. Try restarting the unit, observe if the fault clears; 3. If the fault persists after restart, please contact the dealer or after-sales service center.

Fault Name	Fault Cause	Troubleshooting Recommendation
Combustible Gas Detection Device Communication Fault	1. The combustible gas device left the factory without the 485 address correctly configured as 2. 2. Communication link abnormality between the combustible gas device and the LC control box.	1. Check the communication harness link, observe if the fault clears; 2. Try restarting the unit, observe if the fault clears; 3. Use the method provided by the combustible gas manufacturer to check if the device address is 2. If not, modify it; 4. If the fault persists after restart, please contact the dealer or after-sales service center.
DG Communication Failure	Communication link abnormality between the control board and the diesel generator.	1. Check the communication harness link, observe if the fault clears; 2. Try restarting the unit, observe if the fault clears; 3. If the fault persists after restart, please contact the dealer or after-sales service center.
Battery Over Voltage	1. Single cell voltage too high. 2. Voltage sensing line abnormality.	Record the fault phenomenon, restart the battery, wait a few minutes, confirm if the fault disappears. If the problem persists after restart, please contact the after-sales service center.
	1. Total battery voltage too high. 2. Voltage sensing line abnormality.	
Battery Undervoltage	1. Single cell voltage too low. 2. Voltage sensing line abnormality.	

Fault Name	Fault Cause	Troubleshooting Recommendation
	1. Total battery voltage too low. 2. Voltage sensing line abnormality.	
Battery Overcurrent	1. Charging current too high, battery current limiting abnormality: temperature and voltage values change abruptly. 2. Inverter response abnormal.	
	Battery discharge current too high.	
Battery Overtemperature	1. Ambient Overtemperature. 2. Temperature sensor abnormality.	
Battery Undertemperature	1. Ambient temperature too low. 2. Temperature sensor abnormality.	
Battery Terminal Overtemperature	Terminal temperature too high.	

Fault Name	Fault Cause	Troubleshooting Recommendation
Battery Imbalance	1. Excessive temperature difference. At different stages, the battery will limit its power, i.e., limit charge/discharge current. Therefore, this issue is generally difficult to occur. 2. Cell capacity degradation leads to high internal resistance, causing large temperature rise and thus large temperature difference during overcurrent. 3. Poor welding of cell tabs leads to rapid cell temperature rise during overcurrent. 4. Temperature sampling issue; 5. Power line connection loose.	

Fault Name	Fault Cause	Troubleshooting Recommendation
	1. Inconsistent cell aging. 2. Slave board chip issues can also cause excessive cell voltage difference; 3. Slave board balancing issues can also cause excessive cell voltage difference. 4. Harness issues.	
Insulation Resistance	Insulation resistance damaged.	Check if the ground wire is properly connected, restart the battery. If the problem persists after restart, please contact the after-sales service center.
Pre-charging Failure	Pre-charging failure.	Indicates that during pre-charging, the voltage across the pre-charge MOS always exceeds the specified threshold. Power off and restart to observe if the fault persists. Check if wiring is correct and if the pre-charge MOS is damaged.
Sensing Line Fault	Battery sensing line poor contact or disconnected.	Check wiring, restart the battery. If the problem persists after restart, please contact the after-sales service center.
	Cell voltage sensing line poor contact or disconnected.	Check wiring, restart the battery. If the problem persists after restart, please contact the after-sales service center.
	Cell temperature sensing line poor contact or disconnected.	

Fault Name	Fault Cause	Troubleshooting Recommendation
	Dual-channel current comparison error too large, or current sensing line loop abnormal.	
	Dual-channel voltage comparison error too large or MCU vs AFE voltage comparison error too large, or voltage sensing line loop abnormal.	
	Temperature sensing line loop abnormal or poor contact/disconnected.	
	Overvoltage level 5 or overtemperature level 5, tripped three-terminal fuse.	Three-terminal fuse blown, need to contact after-sales service center to replace the main control board.
Relay or MOS Overtemperature	Relay or MOS overtemperature.	This fault indicates the MOS transistor temperature exceeds the specified threshold. Power off and let it sit for 2h for temperature recovery.
Shunt Overtemperature	Shunt overtemperature.	This fault indicates the shunt temperature exceeds the specified threshold. Power off and let it sit for 2h for temperature recovery.

Fault Name	Fault Cause	Troubleshooting Recommendation
BMS1 Other Fault 1 (Residential Storage)	Relay or MOS open circuit.	1. Upgrade software, power off and let it sit for 5 minutes, restart and see if the fault persists; 2. If it persists, replace the battery pack.
	Relay or MOS short circuit.	1. Upgrade software, power off and let it sit for 5 minutes, restart and see if the fault persists; 2. If it persists, replace the battery pack.
	Communication abnormal between master and slave racks or cell inconsistency between racks.	1. Check the slave battery information and software version, and if the communication cable connection to the master is normal. 2. Upgrade software.
	Battery system loop harness abnormal, causing interlock signal not forming a loop.	Check if the terminal resistor is installed correctly.
	BMS and PCS communication abnormal.	1. Confirm if the communication cable interface definitions between the inverter and the connected battery are correct; 2. Please contact the after-sales service center to check backend data and observe if the inverter and battery software match correctly.
	BMS master and slave control communication harness abnormal.	1. Check wiring, restart the battery; 2. Upgrade battery firmware, if the problem persists after restart, please contact the after-sales service center.

Fault Name	Fault Cause	Troubleshooting Recommendation
	Communication loss between main negative chips.	
	Circuit breaker, shunt trip abnormal.	1. Power off and let it sit for 5 minutes, restart and see if the fault persists; 2. Observe the blind-mate connectors at the bottom of PACK and PCU, check if communication pins are loose or bent;
	MCU self-test failure.	Upgrade software, restart the battery. If the problem persists after restart, contact the after-sales service center.
	1. Software version too low or BMS board damaged. 2. Large number of parallel inverters, excessive inrush current during battery pre-charge.	1. Upgrade software, observe if the fault persists. 2. For parallel systems, perform a black start of the battery first, then start the inverters.
	MCU internal fault.	Upgrade software, restart the battery. This usually indicates MCU or external component damage. If the problem persists after restart, please contact the after-sales service center.
	Main control current exceeds specified threshold.	1. Power off and let it sit for 5 minutes, restart and see if the fault persists; 2. Check if the inverter power setting is too high, exceeding bus load capacity;
	Inconsistent cells in parallel battery racks.	Confirm if the cells in the parallel battery racks are consistent.

Fault Name	Fault Cause	Troubleshooting Recommendation
	Reverse polarity connection of parallel battery racks.	Check if the positive and negative terminals of the parallel battery racks are reversed.
	Severe overtemperature/overvoltage etc. triggering fire protection system.	Contact the after-sales service center.
Air Conditioner Failure	Air conditioner abnormal failure.	Try restarting the system. If the fault is not cleared, please contact the after-sales service center.
	Cabinet door not closed.	Check if the cabinet door is properly closed.
	Supply voltage too high.	Confirm if the supply voltage meets the air conditioner input voltage requirements. Re-power on after confirmation.
	Insufficient supply voltage.	
	No voltage input.	
	Unstable supply voltage.	
	Compressor voltage unstable.	Try restarting the system. If the fault is not cleared, please contact the after-sales service center.
	Sensor poor contact or damaged.	
	Air conditioner fan abnormal.	
	DCDC internal voltage or current abnormal.	Refer to specific DC fault content.

Fault Name	Fault Cause	Troubleshooting Recommendation
BMS1 Other Fault 2 (Residential Storage)	DCDC overload or heatsink temperature too high, etc.	
	Cell sensing abnormal or inconsistent aging.	Please contact the after-sales service center.
	Fan operation not executed normally.	Please contact the after-sales service center.
	Output terminal screw loose or poor contact.	1. Power off the battery, check wiring and output terminal screw condition. 2. After confirmation, restart the battery, observe if the fault persists. If it persists, please contact the after-sales service center.
	Battery used for too long or cells severely damaged.	Please contact the after-sales service center to replace the pack.
	1. Software version too low or BMS board damaged. 2. Large number of parallel inverters, excessive inrush current during battery pre-charge.	1. Upgrade software, observe if the fault persists. 2. For parallel systems, perform a black start of the battery first, then start the inverters.
	Heating film damaged.	Please contact the after-sales service center.
	Heating film three-terminal fuse blown, heating function unavailable.	Please contact the after-sales service center.

Fault Name	Fault Cause	Troubleshooting Recommendation
	Software model, Cell Type, hardware model mismatch.	Check if software model, SN, Cell Type, and hardware model are consistent. If not, please contact the after-sales service center.
	Thermal management board communication cable disconnected.	1. Power off and let it sit for 5 minutes, restart and see if the fault persists; 2. If the fault does not recover, contact after-sales to replace the pack.
	Pack fan fault signal triggered.	
DCDC Fault	Output port voltage too high.	Check output port voltage. If the output port voltage is normal and the fault does not clear itself after restarting the battery, please contact the after-sales service center.
	DCDC module detects battery voltage exceeding maximum charging voltage.	Stop charging, discharge to SOC below 90% or let it sit for 2h. If ineffective and the fault persists after restart, please contact the after-sales service center.
	Heatsink temperature too high.	Let the battery sit for 1h for heatsink temperature to drop. If ineffective and the fault persists after restart, please contact the after-sales service center.
	Battery discharge current too high.	Check if the load exceeds the battery's discharge capability. Turn off the load or stop PCS operation for 60s. If ineffective and the fault persists after restart, please contact the after-sales service center.

Fault Name	Fault Cause	Troubleshooting Recommendation
	Output port power harness positive/negative reversed with parallel battery rack or PCS.	Turn off the battery manual switch, check if output port wiring is correct, restart the battery.
	Output power relay cannot close.	Check if output port wiring is correct, if there is a short circuit. If ineffective and the fault persists after restart, please contact the after-sales service center.
	Power device temperature too high.	Let the battery sit for 1h for internal power device temperature to drop. If ineffective and the fault persists after restart, please contact the after-sales service center.
	Relay welded/stuck.	If the fault persists after restart, please contact the after-sales service center.
Battery Rack Circulating Current Failure	1. Cell imbalance. 2. First power-on without full charge calibration.	Record the fault phenomenon, restart the battery, wait a few minutes, confirm if the fault disappears. If the problem persists after restart, please contact the after-sales service center.
BMS1 Other Fault 3 (Utility Storage)	Communication abnormal with Linux module.	1. Check if the communication cable connection is normal. 2. Upgrade software, restart the battery and observe if the fault persists. If it persists, please contact the after-sales service center.
	Cell temperature rise too fast.	Cell abnormal, contact after-sales to replace the pack.
	SOC below 10%.	Charge the battery.
	SN writing does not comply with rules.	Check if the SN digit count is normal. If abnormal, please contact the after-sales service center.

Fault Name	Fault Cause	Troubleshooting Recommendation
	1. Daisy-chain communication abnormal within a battery rack. 2. Inconsistent cell aging between battery racks.	1. Check the pack contact condition within a single rack. 2. Confirm the usage status of each rack, such as cumulative charge/discharge capacity, cycle count, etc. 3. Please contact the after-sales service center.
	Pack internal humidity too high.	-
	Fuse blown.	Contact after-sales to replace the pack.
	Battery low power.	Charge the battery.
BMS1 Other Fault 4 (Utility Storage)	Circuit breaker abnormal.	Contact after-sales to replace the pack.
	External device abnormal.	Contact after-sales to replace the pack.
Contactor Failure 1	-	-
Contactor Failure 2	-	-
Overload Protection (Ksic)	Sustained overload (exceeding 690KVA) for 10s.	Please contact the after-sales service center.
Overload Protection (Smart Port)	Sustained overload (exceeding 690KVA) for 10s.	Please contact the after-sales service center.
Overcurrent Protection (Ksic)	-	-

Fault Name	Fault Cause	Troubleshooting Recommendation
Overcurrent Protection (Smart Port)	-	-
Master AC On Meter Comm Error	1. Possibly the meter is not connected to the master. 2. Possibly the meter communication cable is loose.	1. Check if the meter is connected to the master. 2. Check if the meter communication cable is loose.
Parallel Slave Meter Error	Meter connected to a slave unit.	Set the unit with the meter as the master.
Slave AC On Timeout with Master	1. Slave address setting error. 2. Slave communication cable loose.	1. Check if slave addresses are duplicated. 2. Check if the parallel communication cable is loose.

8.5.2.2 Batteryfault

No.	fault name	fault cause	Troubleshooting Recommendation
1	BMS1 Cluster 1 Total voltage Over WARNING /BMS1 RACK1 Total voltage is too high warning	1. Battery systemvoltage too high 2. Abnormal collection line	1. Perform Discharge on Battery to check if fault persists. 2. If the fault is not restored, contact the after-sales service center.

No.	fault name	fault cause	Troubleshooting Recommendation
2	BMS1 Cluster 1 Total voltage Too Low WARNING /BMS1 RACK1 Total voltage is too low warning	1. Battery systemvoltage too low 2. Abnormal data collection line	1. Perform Charge on Battery, and observe whether fault persists after standing; 2. Determine the working condition of Inverter, check if it fails to supply power to Battery charge due to issues such as working mode, and attempt to supply power to Battery charge via Inverter, observing whether fault is restored. 3. If the fault is not restored, contact the after-sales service center.
3	BMS1 Cluster 1 Cell voltage Overvoltage WARNING /BMS1 RACK1 Cell voltage is too high warning	1. Single cell voltage too high 2. Abnormal collection line	1. Perform Discharge on Battery, and observe whether fault persists after standing. 2. If fault is not restored, contact the after-sales service center.

No.	fault name	fault cause	Troubleshooting Recommendation
4	BMS1 Cluster 1 Cell voltage Undervoltage WARNING /BMS1 RACK1 Cell voltage is too low warning	1. Single cell voltage too low 2. voltage collection line abnormality	1. Perform Charge on Battery, and observe whether fault persists after standing; 2. Determine the working condition of Inverter, check if it is not supplying power to Battery charge due to issues such as working mode, and attempt to supply power to Battery charge via Inverter, observing whether fault is restored. 3. If fault is not restored, contact after-sales service.
5	BMS1 Cluster 1 Charge Over Temperature WARNING /BMS1 RACK1 Charging temperature is too high warning	1. Ambient Overtemperature 2. Temperature sensor abnormality	1. Stop charging and observe whether the Discharge persists during rest; 2. If the fault is not restored, contact the after-sales service center.

No.	fault name	fault cause	Troubleshooting Recommendation
6	BMS1 Cluster 1 Discharge Over Temperature WARNING /BMS1 RACK1 Discharging temperature is too high warning	1. Ambient Overtemperature 2. Temperature sensor abnormality	1. Stop charging, let it stand and observe whether the fault persists; 2. If the fault is not restored, contact after-sales service.
7	BMS1 Cluster 1 Charge Temperature Too Low WARNING /BMS1 RACK1 Charging temperature is too low warning	1. Ambient temperature too low 2. Temperature sensor abnormality	1. Check the cell temperature in the background. If the minimum temperature is higher than -20°C, set Battery discharge to increase the cell temperature. 2. If the temperature is below -20℃, shut down the Battery and place it in a warm environment. Use it only after the battery cell temperature has recovered. 3. If none of the above works, contact the after-sales service center.

No.	fault name	fault cause	Troubleshooting Recommendation
8	BMS1 cluster 1 Discharge temperature too low WARNING/ BMS1 RACK1 Discharging temperature is too low warning	1. Ambient temperature too low 2. Temperature sensor abnormality	1. Check the cell temperature in the background. If the minimum temperature is higher than -20°C, set Battery discharge to increase the cell temperature. 2. If the temperature is below -20°C, shut down the Battery and place it in a warm environment. Use it only after the battery cell temperature has recovered. 3. If none of the above works, contact the after-sales service center.
9	BMS1 Cluster 1 Overcurrent BMS1 RACK1 Charge overcurrent warning	1. Charging Current is too large, Battery current limiting is abnormal: temperature and voltage value mutation 2. Inverter response anomaly	1. Stop Charge and observe whether fault persists; 2. Check if the Inverter is set with an excessively large Power, causing it to exceed the rated operating current of the Battery; 3. If continuous overcurrent occurs, contact the after-sales service center.

No.	fault name	fault cause	Troubleshooting Recommendation
10	BMS1 Cluster 1 Overcurrent BMS1 RACK1 Discharge overcurrent warning	1. Discharge and current are too large, Battery current limiting is abnormal: temperature and voltage values have changed abruptly. 2. Inverter response anomaly	1. Stop Discharge, let it stand and observe whether fault persists; 2. Check if the Inverter is set with an excessively large Power, causing it to exceed the rated operating current of the Battery; 3. If continuous overcurrent occurs, contact the after-sales service center.
11	BMS1 Cluster 1 Insulation Resistance Low WARNING/ BMS1 RACK1 Insulation resistance is too low warning	Insulation resistance damage or abnormal contact	Check if the ground wire is properly connected and restart the Battery. If the issue persists after restarting, please contact the after-sales service center.

No.	fault name	fault cause	Troubleshooting Recommendation
12	BMS1 Cluster 1 Single Cell Temperature Difference Exceeds Limit WARNING BMS1 RACK1 Cell excessive temperature differentials warning	1. Excessive temperature difference at different stages will result in Battery limiting the Battery Power, specifically restricting the charging Discharge current. Therefore, this issue is generally unlikely to occur. 2. Cell capacity degradation leads to excessive internal resistance, resulting in significant temperature rise and large temperature differences during Overcurrent. 3. Poor welding of the cell tabs leads to excessive heating of the Overcurrent cell. 4. Temperature sampling issue; 5. Loose connection of power cable	Shut down, restart Battery, and wait for 2 hours. If the issue persists, contact the after-sales service center.

No.	fault name	fault cause	Troubleshooting Recommendation
13	BMS1 Cluster 1 Pole Temperature Too High WARNING BMS1 RACK1 Post temperature is too high warning	Pole temperature too high	1. Stop charging, let it stand and observe whether the fault persists; 2. If fault is not restored, contact the after-sales service center.
14	BMS1 cluster 1 cell voltage difference too highWARNING/ BMS1 RACK1 Cell excessive voltage differentials warning	1. Inconsistent aging levels of battery cells 2. Issues with the board chip can also lead to excessive voltage differences between battery cells. 3. Cell imbalance can also lead to excessive voltage differences between cells. 4. Harness issue causing	1. Stop charging, let it stand and observe whether the fault persists; 2. If fault is not restored, contact the after-sales service center.
15	BMS1 Cluster 1PCS Comm LossWARNING/ BMS1 RACK1 PCS communication loss warning	BMS and PCS communication abnormality	Check whether the communication line connection between Battery and Inverter is intact.

No.	fault name	fault cause	Troubleshooting Recommendation
16	BMS1 Cluster 1 DCDCWARNING/ BMS1 RACK1 DCDC warning	There is an abnormality in the voltage or current inside the DCDC.	Upgrade the software and restart the Battery. If the issue persists after restarting, please contact the after-sales service center.
17	BMS1 Cluster 1 Heating Film MOS Adhesion WARNING BMS1 RACK1 Heat film MOS adhesion warning	Heating film MOS damage	Please contact the after-sales service center.
18	BMS1 Cluster 1 Heating Film MOS Open Circuit WARNING/ BMS1 RACK1 Heat film MOS open warning	Heating circuit abnormality	Please contact the after-sales service center.
19	BMS1 Cluster 1 Total voltage Over fault/ BMS1 RACK1 Total voltage is too high fault	1. Battery systemvoltage too high 2. voltage collection line abnormality	1. Perform Discharge on Battery to check if fault persists. 2. If fault is not restored, please contact the after-sales service center.

No.	fault name	fault cause	Troubleshooting Recommendation
20	BMS1 Cluster 1 Total voltage Too Low fault/ BMS1 RACK1 Total voltage is too low fault	1. Battery systemvoltage too low 2. voltage collection line abnormality	1. Perform Charge on Battery, and observe whether fault persists after standing; 2. Determine the working condition of Inverter, check if it fails to supply power to Battery charge due to issues such as working mode, and attempt to supply power to Battery charge via Inverter, observing whether fault is restored. 3. If the fault is not restored, please contact the after-sales service center.
21	BMS1 Cluster 1 Cell voltage Overvoltage fault BMS1 RACK1 Cell voltage is too high fault	1. Single cell voltage too high 2. voltage collection line abnormality	1. Perform Discharge on Battery, and observe whether fault persists after standing. 2. If fault is not restored, please contact the after-sales service center.

No.	fault name	fault cause	Troubleshooting Recommendation
22	BMS1 Cluster 1 Monomer voltage Undervoltage fault/ BMS1 RACK1 Cell voltage is too low fault	1. Single cell voltage too low 2. Abnormal voltage collection line	1. Perform Charge on Battery, and observe whether fault persists after standing; 2. Determine the working condition of Inverter, check if it fails to supply power to Battery charge due to issues such as working mode, and attempt to supply power to Battery charge via Inverter, observing whether fault is restored. 3. If the fault is not restored, please contact the after-sales service center.
23	BMS1 Cluster 1 Charge Over Temperature fault/ BMS1 RACK1 Charging temperature is too high fault	1. Ambient Overtemperature 2. Temperature sensor abnormality	1. Place the Battery in a cool place, let it shut down and rest for 30 minutes, then restart it to see if the fault persists. 2. If the fault persists, please contact the after-sales service center.

No.	fault name	fault cause	Troubleshooting Recommendation
24	BMS1 Cluster 1 Discharge Over Temperature fault/ BMS1 RACK1 Discharging temperature is too high fault	1. Ambient Overtemperature 2. Temperature sensor abnormality	1. Place the Battery in a cool place, let it shut down and rest for 30 minutes, then restart it to see if the fault persists; 2. If the fault persists, please contact the after-sales service center.
25	BMS1 Cluster 1 Charge Temperature Too Low fault/ BMS1 RACK1 Charging temperature is too low fault	1. Ambient temperature too low 2. Temperature sensor abnormality	1. Check the cell temperature in the background. If the minimum temperature is higher than -20°C, set Battery discharge to increase the cell temperature. 2. If the temperature is below -20℃, shut down the Battery and place it in a warm environment. Use it only after the battery cell temperature has recovered. 3. If none of the above works, contact the after-sales service center.

No.	fault name	fault cause	Troubleshooting Recommendation
26	BMS1 Cluster 1 Discharge Temperature Too Low fault BMS1 RACK1 Discharging temperature is too low fault	1. Ambient temperature too low 2. Temperature sensor abnormality	1. Check the cell temperature in the background. If the minimum temperature is higher than -20°C, set Battery discharge to increase the cell temperature. 2. If the temperature is below -20℃, shut down the Battery and place it in a warm environment. Use it only after the battery cell temperature has recovered. 3. If none of the above works, contact the after-sales service center.
27	BMS1 Cluster 1 Overcurrent BMS1 RACK1 Charge overcurrent fault	1. Charging Current is too large, Battery current limiting is abnormal: temperature and voltage value mutation 2. Inverter response anomaly	Let the system stand and shut down for 5 minutes, then restart to check if fault persists. 2. Check if the Inverter is set with an excessively large Power, causing it to exceed the rated operating current of the Battery; 3. If continuous overcurrent occurs, contact the after-sales service center.

No.	fault name	fault cause	Troubleshooting Recommendation
28	BMS1 Cluster 1 Discharge Overcurrent fault / BMS1 RACK1 Discharge overcurrent fault	1. Discharge and current are too large, Battery current limiting is abnormal: temperature and voltage values have changed abruptly. 2. Inverter response anomaly	1. Let the system remain powered off for 5 minutes, then restart and check if fault persists; 2. Check if the Inverter is set with an excessively large Power, causing it to exceed the rated operating current of the Battery; 3. If continuous overcurrent occurs, contact the after-sales service center.
29	BMS1 Cluster 1 Insulation Resistance Low fault BMS1 RACK1 Insulation resistance is too low fault	Insulation resistance damage or abnormal contact	1. Check if the ground wire is properly connected and restart the Battery, 2. Upgrade the software. If the problem persists, please contact the after-sales service center.

No.	fault name	fault cause	Troubleshooting Recommendation
30	BMS1 Cluster 1 Single Cell Temperature Difference Exceeds Limit fault BMS1 RACK1 Cell excessive temperature differentials fault	1. Excessive temperature difference at different stages will result in Battery limiting the Battery Power, specifically restricting the charging Discharge current. Therefore, this issue is generally unlikely to occur. 2. Cell capacity degradation leads to excessive internal resistance, resulting in significant temperature rise and large temperature differences during Overcurrent. 3. Poor welding of the cell tabs leads to excessive heating of the Overcurrent cell. 4. Temperature sampling issue; 5. Loose connection of power cable	Shutdown, restart Battery, wait for 2 hours. If the issue persists, contact the after-sales service center.

No.	fault name	fault cause	Troubleshooting Recommendation
31	BMS1 Cluster 1 Pole Temperature Too High fault BMS1 RACK1 Post temperature is too high fault	Pole temperature too high	1. Let the system remain powered off and idle for 30 minutes, then restart to check if fault persists; 2. If the fault persists, please contact the after-sales service center.
32	BMS1 Cluster 1 Excessive Cell Voltage Difference fault/ BMS1 RACK1 Cell excessive voltage differentials fault	1. Inconsistent aging levels of battery cells 2. Issues with the board chip can also lead to excessive voltage differences between battery cells. 3. Cell imbalance issues can also lead to excessive voltage differences between cells. 4. Harness issue causing	Shut down, restart Battery, and wait for 2 hours. If the issue persists, contact the after-sales service center.

No.	fault name	fault cause	Troubleshooting Recommendation
33	BMS1 Cluster 1 Relay or MOS Short Circuit fault BMS1 RACK1 Relay or MOS short-circuit fault	MOS short circuit	1. Upgrade the software, power off and let it sit for 5 minutes, then check if fault persists after restarting. 2. If the issue persists, contact the after-sales service center.
34	BMS1 Cluster 1 relay or MOS open circuit fault/ BMS1 RACK1 Relay or MOS open-circuit fault	MOS open circuit	1. Upgrade the software, power off and let it sit for 5 minutes, then check if fault persists after restarting. 2. If the issue persists, contact the after-sales service center.
35	BMS1 Cluster 1Pre-charging Failurefault/ BMS1 RACK1 The precharge failed fault	The voltage across the precharge MOS voltage consistently exceeds the specified threshold.	1. Upgrade the software, power off and let it stand for 5 minutes, then check if fault persists after restarting. 2. If the issue persists, contact the after-sales service center.

No.	fault name	fault cause	Troubleshooting Recommendation
36	BMS1 Cluster 1 Acquisition Line fault/ BMS1 RACK1 Acquisition line fault	Battery acquisition line poor contact or disconnected	Power off, check the wiring, re-stack the Battery, and restart. If the issue persists, please contact the after-sales service center.
37	BMS1 Cluster 1 relay or MOS temperature too high fault BMS1 RACK1 Relay or MOS temperature is too high fault	Relay or MOSFET overtemperature	1. Upgrade the software, power off and let it stand for 30 minutes, then check if fault persists after restarting. 2. If the issue persists, contact the after-sales service center.
38	BMS1 Cluster 1 Shunt Over-temperaturefault/ BMS1 RACK1 Diverter temperature is too high fault	Shunt Over-temperature	1. Upgrade the software, power off and let it sit for 30 minutes, then restart to check if fault persists. 2. If the issue persists, contact the after-sales service center.
39	BMS1 Cluster 1 Communication from MCU fault BMS1 RACK1 Slave MCU communication fault	Communication loss between master and slave chips	Check the wiring and restart the Battery. 2. Upgrade the Battery. If the issue persists after restarting, please contact the after-sales service center.

No.	fault name	fault cause	Troubleshooting Recommendation
40	BMS1 Cluster 1 BMU Communication fault/ BMS1 RACK1 BMU communication fault	Abnormal communication harness between BMS master and slave control	Check the wiring and restart the Battery. 2. Upgrade the Battery. If the problem persists after restarting, please contact the after-sales service center.
41	BMS1 Cluster 1 Microelectronics fault/ BMS1 RACK1 Micro-electronics fault	Internal fault of MCU	Upgrade the software and restart the Battery. If the issue persists after restarting, please contact the after-sales service center.
42	BMS1 Cluster 1Hardware Overcurrentfault/ BMS1 RACK1 Hardware overcurrent fault	1. The software version is too low or the BMS board is damaged. 2. The number of parallel units is large, and the impact during pre-charging is excessive.	Upgrade the software and observe whether fault persists. 2. In the case of parallel operation, perform a black start on Battery first, then start Inverter.
43	BMS1 Cluster 1 Application Software Failure/ BMS1 RACK1 Application software fault	MCU self-test failed	Upgrade the software and restart the Battery. If the issue persists after restarting, please contact the after-sales service center.

No.	fault name	fault cause	Troubleshooting Recommendation
44	BMS1 parallel cluster 1 parallel cluster fault/ BMS1 RACK1 Parallel RACK fault	Communication abnormality between the master cluster and slave cluster, or inconsistency of battery cells between clusters.	1. Check the Battery information and software version of the slave unit, and verify whether the communication cable connection with the master unit is normal. 2. Upgrade software
45	BMS1 Cluster 1 DCDC Failure/ BMS1 RACK1 DCDC fault	DCDCOverload or excessive heat sink temperature	Upgrade the software and restart the Battery. If the issue persists after restarting, please contact the after-sales service center.
46	BMS1 cluster 1 cell inconsistency fault BMS1 RACK1 Inconsistent cell fault	1. Abnormal Cell Identification 2. Stacking of different types of battery cells	Check Cell Type
47	BMS1 Cluster 1 Output port Overtemperature fault/ BMS1 RACK1 The output port over temperature fault	Output port screw loose or poor contact	1. Battery Shut down, check wiring and output port screw status 2. After confirmation, restart the Battery and observe whether the fault persists. If it does, contact the after-sales service center.

No.	fault name	fault cause	Troubleshooting Recommendation
48	BMS1 Cluster 1 SOH Too Lowfault/ BMS1 RACK1 SOH too low fault	Battery has been used for too long or the battery cell is severely damaged.	Replace pack
49	BMS1 Cluster 1 Heating Film Three-Terminal fault BMS1 RACK1 Heating film MOS Three-terminal fault	Heating film MOS damage	Please contact the after-sales service center.

9 technical parameter

9.1 Inverter Parameters

Technical Data	GW5K-ETA-G20	GW6K-ETA-G20	GW8K-ETA-G20
Battery Side			
Battery Type	LFP ($LiFePO_4$)	LFP ($LiFePO_4$)	LFP ($LiFePO_4$)
Nominal Voltage (V)	750	750	750
Voltage Range (V)	700~950	700~950	700~950
Start-up Voltage (V)	720	720	720
Number of Battery Input	1	1	1
Max. Continuous Charging Current (A)	6.7	8.1	10.7
Max. Continuous Discharging Current (A)	7.4	8.9	11.8
Max. Charging Power (kW)	5	6	8
Max. Discharging Power (kW)	5.5	6.6	8.8
PV Side			
Max. Input Power (kW)	10	12	16

Technical Data	GW5K-ETA-G20	GW6K-ETA-G20	GW8K-ETA-G20
Max. Input Voltage (V)*1	1000	1000	1000
MPPT Operating Voltage Range (V)*2	120~950	120~950	120~950
MPPT Voltage Range at Nominal Power (V)	185~850	225~850	300~850
Start-up Voltage (V)	150	150	150
Nominal Input Voltage (V)	750	750	750
Max. MPPT Current (A)	21/21/21	21/21/21	21/21/21
Max. MPPT Short Circuit Current (A)	26/26/26	26/26/26	26/26/26
Max. Backfeed Current to The Array (A)	0	0	0
Number of MPPTs	3	3	3
Number of Strings per MPPT	1/1/1	1/1/1	1/1/1
AC Side (Grid Port)			
Rated Power (kW)	5	6	8
Max. Power (kW)	5	6	8
Rated Apparent Power to Grid (kVA)	5	6	8

Technical Data	GW5K-ETA-G20	GW6K-ETA-G20	GW8K-ETA-G20
Rated Apparent Power from Grid (kVA)	5	6	8
Max. Apparent Power to Grid (kVA)*3	5	6	8
Max. Apparent Power from Grid (kVA)	43.5*4	43.5*4	43.5*4
Nominal Voltage (V)	220/380, 230/400, 3L/N/PE	220/380, 230/400, 3L/N/PE	220/380, 230/400, 3L/N/PE
Voltage Range (V)	180 ~ 260 (According to local standard)	180 ~ 260 (According to local standard)	180 ~ 260 (According to local standard)
Nominal Frequency (Hz)	50/60	50/60	50/60
Frequency Range (Hz)	45~55 / 55~65	45~55 / 55~65	45~55 / 55~65
Rated Current to Grid (A)	7.6 @380V 7.3 @400V	9.1 @380V 8.7 @400V	12.2 @380V 11.6 @400V
Rated Current from Grid (A)	7.6 @380V 7.3 @400V	9.1 @380V 8.7 @400V	12.2 @380V 11.6 @400V
Max. Current to Grid (A)*6	7.6 @380V 7.3 @400V	9.1 @380V 8.7 @400V	12.2 @380V 11.6 @400V
Max. Current from Grid (A)*6	63.0*4	63.0*4	63.0*4
Max. Output Fault Current (Peak and Duration) (A)	46.7@4μs	46.7@4μs	46.7@4μs

Technical Data	GW5K-ETA-G20	GW6K-ETA-G20	GW8K-ETA-G20
Inrush Current (Peak and Duration) (A)	21.3@5ms	21.3@5ms	21.3@5ms
THDi	<3%	<3%	<3%
Maximum Output Overcurrent Protection (A)	46.7	46.7	46.7
Type of Voltage	a.c.	a.c.	a.c.
AC Side (Back-up Port)			
Rated Apparent Power (kVA)	5	6	8
Max. Apparent Power (kVA)*7	Off-grid: 5.5 (10.0, 10s), on-grid: 43.5	Off-grid: 6.6(12, 10s), on-grid： 43.5	Off-grid: 8.8 (16.0, 10s), on-grid： 43.5
Nominal Voltage (V)	220/380, 230/400, 3L/N/PE	220/380, 230/400, 3L/N/PE	220/380, 230/400, 3L/N/PE
Nominal Frequency (Hz)	50/60	50/60	50/60
Frequency Range (Hz)	45~55 / 55~65	45~55 / 55~65	45~55 / 55~65
Rated Current (A)	7.6 @380V 7.3 @400V	9.1 @380V 8.7 @400V	12.2 @380V 11.6 @400V
Max. Current (A)*7	Off-grid: 11.4, on-grid: 63	Off-grid: 13.7, on-grid:63	Off-grid: 18.2, on-grid: 63
Max. Fault Current (Peak and Duration) (A)	46.7@4μs	46.7@4μs	46.7@4μs

Technical Data	GW5K-ETA-G20	GW6K-ETA-G20	GW8K-ETA-G20
Inrush Current (Peak and Duration) (A)	21.3@5ms	21.3@5ms	21.3@5ms
Maximum Overcurrent Protection (A)	46.7	46.7	46.7
THDv (@Linear Load)	<3%	<3%	<3%
On/Off-grid Switching Time（ms）	<4	<4	<4
Efficiency			
Max. Efficiency	98.00%	98.00%	98.00%
European Efficiency	96.40%	96.90%	97.10%
Max. Battery to AC Efficiency	98.00%	98.00%	98.00%
Protection			
PV String Current Monitoring	Integrated	Integrated	Integrated
PV Insulation Resistance Detection	Integrated	Integrated	Integrated
Residual Current Monitoring	Integrated	Integrated	Integrated
PV Reverse Polarity Protection	Integrated	Integrated	Integrated

Technical Data	GW5K-ETA-G20	GW6K-ETA-G20	GW8K-ETA-G20
Battery Reverse Polarity Protection	Integrated	Integrated	Integrated
Anti-islanding Protection	Integrated	Integrated	Integrated
AC Overcurrent Protection	Integrated	Integrated	Integrated
AC Short Circuit Protection	Integrated	Integrated	Integrated
AC Overvoltage Protection	Integrated	Integrated	Integrated
DC Switch	Integrated	Integrated	Integrated
DC Surge Protection	Type II(Type I+II optional)	Type II(Type I+II optional)	Type II(Type I+II optional)
AC Surge Protection	Type II	Type II	Type II
Rapid Shutdown	Optional	Optional	Optional
AFCI	Optional	Optional	Optional
Remote Shutdown	Integrated	Integrated	Integrated
General Data			
Power Factor	0.8 leading ... 0.8 lagging	0.8 leading ... 0.8 lagging	0.8 leading ... 0.8 lagging
Operating Temperature Range (℃)	-35~+60	-35~+60	-35~+60
Operating Environment	Indoor/Outdoor	Indoor/Outdoor	Indoor/Outdoor

Technical Data	GW5K-ETA-G20	GW6K-ETA-G20	GW8K-ETA-G20
Relative Humidity	0~100%	0~100%	0~100%
Max. Operating Altitude (m)	4000 (>2000 derating)	4000 (>2000 derating)	4000 (>2000 derating)
Cooling Method	Smart Fan Cooling	Smart Fan Cooling	Smart Fan Cooling
User Interface	LED, WLAN+APP	LED, WLAN+APP	LED, WLAN+APP
Communication with BMS	CAN	CAN	CAN
Communication	RS485, WiFi+LAN+Bluetooth, 4G+Bluetooth(Optional)	RS485, WiFi+LAN+Bluetooth, 4G+Bluetooth(Optional)	RS485, WiFi+LAN+Bluetooth, 4G+Bluetooth(Optional)
Communication Protocols	Modbus-RTU, Modbus-TCP	Modbus-RTU, Modbus-TCP	Modbus-RTU, Modbus-TCP
Weight (kg)	34	34	34
Dimension (W×H×D mm)	800*340*270	800*340*270	800*340*270
Noise Emission (dB)	≤35	≤35	≤35
Topology	Non-isolated	Non-isolated	Non-isolated
Self-consumption at Night (W)	≤10	≤10	≤10
Ingress Protection Rating	IP66	IP66	IP66
DC Connector	MC4, VACONN Terminal	MC4, VACONN Terminal	MC4, VACONN Terminal

Technical Data	GW5K-ETA-G20	GW6K-ETA-G20	GW8K-ETA-G20
AC Connector	VACONN Terminal	VACONN Terminal	VACONN Terminal
Environmental Category	4K4H	4K4H	4K4H
Pollution Degree	III	III	III
Overvoltage Category	DC II / AC III	DC II / AC III	DC II / AC III
Protective Class	I	I	I
Storage Temperature (℃)	-40~+70	-40~+70	-40~+70
The Decisive Voltage Class (DVC)	Battery: C PV: C AC: C Com: A	Battery: C PV: C AC: C Com: A	Battery: C PV: C AC: C Com: A
Mounting Method	Wall/Floor Mounted	Wall/Floor Mounted	Wall/Floor Mounted
Active Anti-islanding Method*8	SMS(Slip-mode frequency) +AFD	SMS(Slip-mode frequency) +AFD	SMS(Slip-mode frequency) +AFD
Type of Electrical Supply System	three phase	three phase	three phase
Country of Manufacture	China	China	China
Certification			
Grid Standard	Please refer to the official website		
Safety Regulation			

Technical Data	GW5K-ETA-G20	GW6K-ETA-G20	GW8K-ETA-G20
EMC			

Technical Data	GW9.999K-ETA-G20	GW10K-ETA-G20	GW12K-ETA-G20
Battery Side			
Battery Type	LFP ($LiFePO_4$)	LFP ($LiFePO_4$)	LFP ($LiFePO_4$)
Nominal Voltage (V)	750	750	750
Voltage Range (V)	700~950	700~950	700~950
Start-up Voltage (V)	720	720	720
Number of Battery Input	1	1	1
Max. Continuous Charging Current (A)	13.4	13.4	16.1
Max. Continuous Discharging Current (A)	14.7	14.7	17.7
Max. Charging Power (kW)	10	10	12
Max. Discharging Power (kW)	11	11	13.2
PV Side			
Max. Input Power (kW)	20	20	24

Technical Data	GW9.999K-ETA-G20	GW10K-ETA-G20	GW12K-ETA-G20
Max. Input Voltage (V)*1	1000	1000	1000
MPPT Operating Voltage Range (V)*2	120~950	120~950	120~950
MPPT Voltage Range at Nominal Power (V)	250~850	250~850	300~850
Start-up Voltage (V)	150	150	150
Nominal Input Voltage (V)	750	750	750
Max. MPPT Current (A)	21/21/21/21	21/21/21/21	21/21/21/21
Max. MPPT Short Circuit Current (A)	26/26/26/26	26/26/26/26	26/26/26/26
Max. Backfeed Current to The Array (A)	0	0	0
Number of MPPTs	4	4	4
Number of Strings per MPPT	1/1/1/1	1/1/1/1	1/1/1/1
AC Side (Grid Port)			
Rated Power (kW)	9.999	10	12
Max. Power (kW)	9.999	10	12
Rated Apparent Power to Grid (kVA)	9.999	10	12

Technical Data	GW9.999K-ETA-G20	GW10K-ETA-G20	GW12K-ETA-G20
Rated Apparent Power from Grid (kVA)	9.999	10	12
Max. Apparent Power to Grid (kVA)*3	9.999	10	12
Max. Apparent Power from Grid (kVA)	43.5*4	43.5*4	43.5*4
Nominal Voltage (V)	220/380, 230/400, 3L/N/PE	220/380, 230/400, 3L/N/PE	220/380, 230/400, 3L/N/PE
Voltage Range (V)	180 ~ 260 (According to local standard)	180 ~ 260 (According to local standard)	180 ~ 260 (According to local standard)
Nominal Frequency (Hz)	50/60	50/60	50/60
Frequency Range (Hz)	45~55 / 55~65	45~55 / 55~65	45~55 / 55~65
Rated Current to Grid (A)	15.2 @380V 14.5 @400V	15.2 @380V 14.5 @400V	18.2 @380V 17.4 @400V
Rated Current from Grid (A)	15.2 @380V 14.5 @400V	15.2 @380V 14.5 @400V	18.2 @380V 17.4 @400V
Max. Current to Grid (A)*6	15.2 @380V 14.5 @400V	15.2 @380V 14.5 @400V	18.2 @380V 17.4 @400V
Max. Current from Grid (A)*6	63.0*4	63.0*4	63.0*4
Max. Output Fault Current (Peak and Duration) (A)	74.6@4μs	74.6@4μs	74.6@4μs

Technical Data	GW9.999K-ETA-G20	GW10K-ETA-G20	GW12K-ETA-G20
Inrush Current (Peak and Duration) (A)	25.4@5ms	25.4@5ms	25.4@5ms
THDi	<3%	<3%	<3%
Maximum Output Overcurrent Protection (A)	74.6	74.6	74.6
Type of Voltage	a.c.	a.c.	a.c.
AC Side (Back-up Port)			
Rated Apparent Power (kVA)	10	10	12
Max. Apparent Power (kVA)*7	Off-grid: 11(20.0, 10s), on-grid： 43.5	Off-grid: 11(20.0, 10s), on-grid: 43.5	Off-grid: 13.2(24, 10s), on-grid: 43.5
Nominal Voltage (V)	220/380, 230/400, 3L/N/PE	220/380, 230/400, 3L/N/PE	220/380, 230/400, 3L/N/PE
Nominal Frequency (Hz)	50/60	50/60	50/60
Frequency Range (Hz)	45~55 / 55~65	45~55 / 55~65	45~55 / 55~65
Rated Current (A)	15.2 @380V 14.5 @400V	15.2 @380V 14.5 @400V	18.2 @380V 17.4 @400V
Max. Current (A)*7	Off-grid: 22.8, on-grid:63	Off-grid: 22.8, on-grid: 63	Off-grid: 27.3, on-grid: 63
Max. Fault Current (Peak and Duration) (A)	74.6@4μs	74.6@4μs	74.6@4μs

Technical Data	GW9.999K-ETA-G20	GW10K-ETA-G20	GW12K-ETA-G20
Inrush Current (Peak and Duration) (A)	25.4@5ms	25.4@5ms	25.4@5ms
Maximum Overcurrent Protection (A)	74.6	74.6	74.6
THDv (@Linear Load)	<3%	<3%	<3%
On/Off-grid Switching Time（ms）	<4	<4	<4
Efficiency			
Max. Efficiency	98.10%	98.10%	98.10%
European Efficiency	97.20%	97.20%	97.20%
Max. Battery to AC Efficiency	98.00%	98.00%	98.00%
Protection			
PV String Current Monitoring	Integrated	Integrated	Integrated
PV Insulation Resistance Detection	Integrated	Integrated	Integrated
Residual Current Monitoring	Integrated	Integrated	Integrated
PV Reverse Polarity Protection	Integrated	Integrated	Integrated

Technical Data	GW9.999K-ETA-G20	GW10K-ETA-G20	GW12K-ETA-G20
Battery Reverse Polarity Protection	Integrated	Integrated	Integrated
Anti-islanding Protection	Integrated	Integrated	Integrated
AC Overcurrent Protection	Integrated	Integrated	Integrated
AC Short Circuit Protection	Integrated	Integrated	Integrated
AC Overvoltage Protection	Integrated	Integrated	Integrated
DC Switch	Integrated	Integrated	Integrated
DC Surge Protection	Type II(Type I+II optional)	Type II(Type I+II optional)	Type II(Type I+II optional)
AC Surge Protection	Type II	Type II	Type II
Rapid Shutdown	Optional	Optional	Optional
AFCI	Optional	Optional	Optional
Remote Shutdown	Integrated	Integrated	Integrated
General Data			
Power Factor	0.8 leading ... 0.8 lagging	0.8 leading ... 0.8 lagging	0.8 leading ... 0.8 lagging
Operating Temperature Range (℃)	-35~+60	-35~+60	-35~+60

Technical Data	GW9.999K-ETA-G20	GW10K-ETA-G20	GW12K-ETA-G20
Operating Environment	Indoor/Outdoor	Indoor/Outdoor	Indoor/Outdoor
Relative Humidity	0~100%	0~100%	0~100%
Max. Operating Altitude (m)	4000 (>2000 derating)	4000 (>2000 derating)	4000 (>2000 derating)
Cooling Method	Smart Fan Cooling	Smart Fan Cooling	Smart Fan Cooling
User Interface	LED, WLAN+APP	LED, WLAN+APP	LED, WLAN+APP
Communication with BMS	CAN	CAN	CAN
Communication	RS485, WiFi+LAN+Bluetooth, 4G+Bluetooth(Optional)	RS485, WiFi+LAN+Bluetooth, 4G+Bluetooth(Optional)	RS485, WiFi+LAN+Bluetooth, 4G+Bluetooth(Optional)
Communication Protocols	Modbus-RTU, Modbus-TCP	Modbus-RTU, Modbus-TCP	Modbus-RTU, Modbus-TCP
Weight (kg)	34	34	34
Dimension (W×H×D mm)	800*340*270	800*340*270	800*340*270
Noise Emission (dB)	≤40	≤40	≤40
Topology	Non-isolated	Non-isolated	Non-isolated
Self-consumption at Night (W)	≤10	≤10	≤10
Ingress Protection Rating	IP66	IP66	IP66

Technical Data	GW9.999K-ETA-G20	GW10K-ETA-G20	GW12K-ETA-G20
DC Connector	MC4, VACONN Terminal	MC4, VACONN Terminal	MC4, VACONN Terminal
AC Connector	VACONN Terminal	VACONN Terminal	VACONN Terminal
Environmental Category	4K4H	4K4H	4K4H
Pollution Degree	III	III	III
Overvoltage Category	DC II / AC III	DC II / AC III	DC II / AC III
Protective Class	I	I	I
Storage Temperature (℃)	-40~+70	-40~+70	-40~+70
The Decisive Voltage Class (DVC)	Battery: C PV: C AC: C Com: A	Battery: C PV: C AC: C Com: A	Battery: C PV: C AC: C Com: A
Mounting Method	Wall/Floor Mounted	Wall/Floor Mounted	Wall/Floor Mounted
Active Anti-islanding Method*8	SMS(Slip-mode frequency) +AFD	SMS(Slip-mode frequency) +AFD	SMS(Slip-mode frequency) +AFD
Type of Electrical Supply System	three phase	three phase	three phase
Country of Manufacture	China	China	China
Certification			

Technical Data	GW9.999K-ETA-G20	GW10K-ETA-G20	GW12K-ETA-G20
Grid Standard	Please refer to the official website		
Safety Regulation			
EMC			

Technical Data	GW15K-ETA-G20	GW20K-ETA-G20	GW25K-ETA-G20
Battery Side			
Battery Type	LFP ($LiFePO_4$)	LFP ($LiFePO_4$)	LFP ($LiFePO_4$)
Nominal Voltage (V)	750	750	750
Voltage Range (V)	700~950	700~950	700~950
Start-up Voltage (V)	720	720	720
Number of Battery Input	1	1	1
Max. Continuous Charging Current (A)	20.1	26.7	33.3
Max. Continuous Discharging Current (A)	22.1	29.4	36.7
Max. Charging Power (kW)	15	20	25
Max. Discharging Power (kW)	16.5	22	27.5
PV Side			

Technical Data	GW15K-ETA-G20	GW20K-ETA-G20	GW25K-ETA-G20
Max. Input Power (kW)	30	40	50
Max. Input Voltage (V)*1	1000	1000	1000
MPPT Operating Voltage Range (V)*2	120~950	120~950	120~950
MPPT Voltage Range at Nominal Power (V)	360~850	400~850	400~850
Start-up Voltage (V)	150	150	150
Nominal Input Voltage (V)	750	750	750
Max. MPPT Current (A)	21/21/21/21	21/21/21/21	21/21/42/42
Max. MPPT Short Circuit Current (A)	26/26/26/26	26/26/26/26	26/26/52/52
Max. Backfeed Current to The Array (A)	0	0	0
Number of MPPTs	4	4	4
Number of Strings per MPPT	1/1/1/1	1/1/1/1	1/1/2/2
AC Side (Grid Port)			
Rated Power (kW)	15	20	25
Max. Power (kW)	15	20	25

Technical Data	GW15K-ETA-G20	GW20K-ETA-G20	GW25K-ETA-G20
Rated Apparent Power to Grid (kVA)	15	20	25
Rated Apparent Power from Grid (kVA)	15	20	25
Max. Apparent Power to Grid (kVA)*3	15	20	25
Max. Apparent Power from Grid (kVA)	43.5*4	43.5*4	55.2*5
Nominal Voltage (V)	220/380, 230/400, 3L/N/PE	220/380, 230/400, 3L/N/PE	220/380, 230/400, 3L/N/PE
Voltage Range (V)	180 ~ 260 (According to local standard)	180 ~ 260 (According to local standard)	180 ~ 260 (According to local standard)
Nominal Frequency (Hz)	50/60	50/60	50/60
Frequency Range (Hz)	45~55 / 55~65	45~55 / 55~65	45~55 / 55~65
Rated Current to Grid (A)	22.8 @380V 21.8 @400V	30.4 @380V 29.0 @400V	37.9 @380V 36.3 @400V
Rated Current from Grid (A)	22.8 @380V 21.8 @400V	30.4 @380V 29.0 @400V	37.9 @380V 36.3 @400V
Max. Current to Grid (A)*6	22.8 @380V 21.8 @400V	30.4 @380V 29.0 @400V	37.9 @380V 36.3 @400V
Max. Current from Grid (A)*6	63.0*4	63.0*4	80.0*5

Technical Data	GW15K-ETA-G20	GW20K-ETA-G20	GW25K-ETA-G20
Max. Output Fault Current (Peak and Duration) (A)	83.3@4μs	83.3@4μs	125@4μs
Inrush Current (Peak and Duration) (A)	29.1@5ms	29.1@5ms	32.3@5ms
THDi	<3%	<3%	<3%
Maximum Output Overcurrent Protection (A)	83.3	83.3	125
Type of Voltage	a.c.	a.c.	a.c.
AC Side (Back-up Port)			
Rated Apparent Power (kVA)	15	20	25
Max. Apparent Power (kVA)*7	Off-grid: 16.5(30, 10s), on-grid:43.5	Off-grid: 22(30.0, 10s), on-grid:43.5	Off-grid: 27.5(45.0, 10s), on-grid:55.2
Nominal Voltage (V)	220/380, 230/400, 3L/N/PE	220/380, 230/400, 3L/N/PE	220/380, 230/400, 3L/N/PE
Nominal Frequency (Hz)	50/60	50/60	50/60
Frequency Range (Hz)	45~55 / 55~65	45~55 / 55~65	45~55 / 55~65
Rated Current (A)	22.8 @380V 21.8 @400V	30.4 @380V 29.0 @400V	37.9 @380V 36.3 @400V
Max. Current (A)*7	Off-grid: 33.4, on-grid: 63	Off-grid: 33.4, on-grid: 63	Off-grid: 50.0, on-grid: 80

Technical Data	GW15K-ETA-G20	GW20K-ETA-G20	GW25K-ETA-G20
Max. Fault Current (Peak and Duration) (A)	83.3@4μs	83.3@4μs	125@4μs
Inrush Current (Peak and Duration) (A)	29.1@5ms	29.1@5ms	32.3@5ms
Maximum Overcurrent Protection (A)	83.3	83.3	125
THDv (@Linear Load)	<3%	<3%	<3%
On/Off-grid Switching Time（ms）	<4	<4	<4
Efficiency			
Max. Efficiency	98.10%	98.10%	98.20%
European Efficiency	97.30%	97.30%	97.40%
Max. Battery to AC Efficiency	98.00%	98.00%	98.00%
Protection			
PV String Current Monitoring	Integrated	Integrated	Integrated
PV Insulation Resistance Detection	Integrated	Integrated	Integrated
Residual Current Monitoring	Integrated	Integrated	Integrated

Technical Data	GW15K-ETA-G20	GW20K-ETA-G20	GW25K-ETA-G20
PV Reverse Polarity Protection	Integrated	Integrated	Integrated
Battery Reverse Polarity Protection	Integrated	Integrated	Integrated
Anti-islanding Protection	Integrated	Integrated	Integrated
AC Overcurrent Protection	Integrated	Integrated	Integrated
AC Short Circuit Protection	Integrated	Integrated	Integrated
AC Overvoltage Protection	Integrated	Integrated	Integrated
DC Switch	Integrated	Integrated	Integrated
DC Surge Protection	Type II(Type I+II optional)	Type II(Type I+II optional)	Type II(Type I+II optional)
AC Surge Protection	Type II	Type II	Type II
Rapid Shutdown	Optional	Optional	Optional
AFCI	Optional	Optional	Optional
Remote Shutdown	Integrated	Integrated	Integrated
General Data			
Power Factor	0.8 leading ... 0.8 lagging	0.8 leading ... 0.8 lagging	0.8 leading ... 0.8 lagging
Operating Temperature Range (℃)	-35~+60	-35~+60	-35~+60

Technical Data	GW15K-ETA-G20	GW20K-ETA-G20	GW25K-ETA-G20
Operating Environment	Indoor/Outdoor	Indoor/Outdoor	Indoor/Outdoor
Relative Humidity	0~100%	0~100%	0~100%
Max. Operating Altitude (m)	4000 (>2000 derating)	4000 (>2000 derating)	4000 (>2000 derating)
Cooling Method	Smart Fan Cooling	Smart Fan Cooling	Smart Fan Cooling
User Interface	LED, WLAN+APP	LED, WLAN+APP	LED, WLAN+APP
Communication with BMS	CAN	CAN	CAN
Communication	RS485, WiFi+LAN+Bluetooth, 4G+Bluetooth(Optional)	RS485, WiFi+LAN+Bluetooth, 4G+Bluetooth(Optional)	RS485, WiFi+LAN+Bluetooth, 4G+Bluetooth(Optional)
Communication Protocols	Modbus-RTU, Modbus-TCP	Modbus-RTU, Modbus-TCP	Modbus-RTU, Modbus-TCP
Weight (kg)	34	34	38
Dimension (W×H×D mm)	800*340*270	800*340*270	800*340*270
Noise Emission (dB)	≤40	≤40	≤45
Topology	Non-isolated	Non-isolated	Non-isolated
Self-consumption at Night (W)	≤10	≤10	≤10
Ingress Protection Rating	IP66	IP66	IP66

Technical Data	GW15K-ETA-G20	GW20K-ETA-G20	GW25K-ETA-G20
DC Connector	MC4, VACONN Terminal	MC4, VACONN Terminal	MC4, VACONN Terminal
AC Connector	VACONN Terminal	VACONN Terminal	VACONN Terminal
Environmental Category	4K4H	4K4H	4K4H
Pollution Degree	III	III	III
Overvoltage Category	DC II / AC III	DC II / AC III	DC II / AC III
Protective Class	I	I	I
Storage Temperature (℃)	-40~+70	-40~+70	-40~+70
The Decisive Voltage Class (DVC)	Battery: C PV: C AC: C Com: A	Battery: C PV: C AC: C Com: A	Battery: C PV: C AC: C Com: A
Mounting Method	Wall/Floor Mounted	Wall/Floor Mounted	Wall/Floor Mounted
Active Anti-islanding Method*8	SMS(Slip-mode frequency) +AFD	SMS(Slip-mode frequency) +AFD	SMS(Slip-mode frequency) +AFD
Type of Electrical Supply System	three phase	three phase	three phase
Country of Manufacture	China	China	China
Certification			
Grid Standard			

Technical Data	GW15K-ETA-G20	GW20K-ETA-G20	GW25K-ETA-G20
Safety Regulation	Please refer to the official website		
EMC			

Technical Data	GW29.999K-ETA-G20	GW30K-ETA-G20
Battery Side		
Battery Type	LFP ($LiFePO_4$)	LFP ($LiFePO_4$)
Nominal Voltage (V)	750	750
Voltage Range (V)	700~950	700~950
Start-up Voltage (V)	720	720
Number of Battery Input	1	1
Max. Continuous Charging Current (A)	40.0	40.0
Max. Continuous Discharging Current (A)	44.1	44.1
Max. Charging Power (kW)	30	30
Max. Discharging Power (kW)	33	33
PV Side		
Max. Input Power (kW)	60	60
Max. Input Voltage (V)*1	1000	1000
MPPT Operating Voltage Range (V)*2	120~950	120~950

Technical Data	GW29.999K-ETA-G20	GW30K-ETA-G20
MPPT Voltage Range at Nominal Power (V)	450~850	450~850
Start-up Voltage (V)	150	150
Nominal Input Voltage (V)	750	750
Max. MPPT Current (A)	21/21/42/42	21/21/42/42
Max. MPPT Short Circuit Current (A)	26/26/52/52	26/26/52/52
Max. Backfeed Current to The Array (A)	0	0
Number of MPPTs	4	4
Number of Strings per MPPT	1/1/2/2	1/1/2/2
AC Side (Grid Port)		
Rated Power (kW)	29.999	30
Max. Power (kW)	29.999	30
Rated Apparent Power to Grid (kVA)	29.999	30
Rated Apparent Power from Grid (kVA)	29.999	30
Max. Apparent Power to Grid (kVA)*3	29.999	30
Max. Apparent Power from Grid (kVA)	55.2*5	55.2*5
Nominal Voltage (V)	220/380, 230/400, 3L/N/PE	220/380, 230/400, 3L/N/PE

Technical Data	GW29.999K-ETA-G20	GW30K-ETA-G20
Voltage Range (V)	180 ~ 260 (According to local standard)	180 ~ 260 (According to local standard)
Nominal Frequency (Hz)	50/60	50/60
Frequency Range (Hz)	45~55 / 55~65	45~55 / 55~65
Rated Current to Grid (A)	45.5 @380V 43.5 @400V	45.5 @380V 43.5 @400V
Rated Current from Grid (A)	45.5 @380V 43.5 @400V	45.5 @380V 43.5 @400V
Max. Current to Grid (A)*6	45.5 @380V 43.5 @400V	45.5 @380V 43.5 @400V
Max. Current from Grid (A)*6	80.0*5	80.0*5
Max. Output Fault Current (Peak and Duration) (A)	125@4μs	125@4μs
Inrush Current (Peak and Duration) (A)	32.3@5ms	32.3@5ms
THDi	<3%	<3%
Maximum Output Overcurrent Protection (A)	125	125
Type of Voltage	a.c.	a.c.
AC Side (Back-up Port)		
Rated Apparent Power (kVA)	30	30
Max. Apparent Power (kVA)*7	Off-grid: 33(45.0, 10s), on-grid: 55.2	Off-grid: 33(45.0, 10s), on-grid:55.2

Technical Data	GW29.999K-ETA-G20	GW30K-ETA-G20
Nominal Voltage (V)	220/380, 230/400, 3L/N/PE	220/380, 230/400, 3L/N/PE
Nominal Frequency (Hz)	50/60	50/60
Frequency Range (Hz)	45~55 / 55~65	45~55 / 55~65
Rated Current (A)	45.5 @380V 43.5 @400V	45.5 @380V 43.5 @400V
Max. Current (A)*7	Off-grid: 50.0, on-grid: 80	Off-grid: 50.0, on-grid: 80
Max. Fault Current (Peak and Duration) (A)	125@4μs	125@4μs
Inrush Current (Peak and Duration) (A)	32.3@5ms	32.3@5ms
Maximum Overcurrent Protection (A)	125	125
THDv (@Linear Load)	<3%	<3%
On/Off-grid Switching Time（ms）	<4	<4
Efficiency		
Max. Efficiency	98.20%	98.20%
European Efficiency	97.40%	97.40%
Max. Battery to AC Efficiency	98.00%	98.00%
Protection		
PV String Current Monitoring	Integrated	Integrated

Technical Data	GW29.999K-ETA-G20	GW30K-ETA-G20
PV Insulation Resistance Detection	Integrated	Integrated
Residual Current Monitoring	Integrated	Integrated
PV Reverse Polarity Protection	Integrated	Integrated
Battery Reverse Polarity Protection	Integrated	Integrated
Anti-islanding Protection	Integrated	Integrated
AC Overcurrent Protection	Integrated	Integrated
AC Short Circuit Protection	Integrated	Integrated
AC Overvoltage Protection	Integrated	Integrated
DC Switch	Integrated	Integrated
DC Surge Protection	Type II(Type I+II optional)	Type II(Type I+II optional)
AC Surge Protection	Type II	Type II
Rapid Shutdown	Optional	Optional
AFCI	Optional	Optional
Remote Shutdown	Integrated	Integrated
General Data		
Power Factor	0.8 leading ... 0.8 lagging	0.8 leading ... 0.8 lagging
Operating Temperature Range (℃)	-35~+60	-35~+60

Technical Data	GW29.999K-ETA-G20	GW30K-ETA-G20
Operating Environment	Indoor/Outdoor	Indoor/Outdoor
Relative Humidity	0~100%	0~100%
Max. Operating Altitude (m)	4000 (>2000 derating)	4000 (>2000 derating)
Cooling Method	Smart Fan Cooling	Smart Fan Cooling
User Interface	LED, WLAN+APP	LED, WLAN+APP
Communication with BMS	CAN	CAN
Communication	RS485, WiFi+LAN+Bluetooth, 4G+Bluetooth(Optional)	RS485, WiFi+LAN+Bluetooth, 4G+Bluetooth(Optional)
Communication Protocols	Modbus-RTU, Modbus-TCP	Modbus-RTU, Modbus-TCP
Weight (kg)	38	38
Dimension (W×H×D mm)	800*340*270	800*340*270
Noise Emission (dB)	≤45	≤45
Topology	Non-isolated	Non-isolated
Self-consumption at Night (W)	≤10	≤10
Ingress Protection Rating	IP66	IP66
DC Connector	MC4, VACONN Terminal	MC4, VACONN Terminal
AC Connector	VACONN Terminal	VACONN Terminal

Technical Data	GW29.999K-ETA-G20	GW30K-ETA-G20
Environmental Category	4K4H	4K4H
Pollution Degree	III	III
Overvoltage Category	DC II / AC III	DC II / AC III
Protective Class	I	I
Storage Temperature (℃)	-40~+70	-40~+70
The Decisive Voltage Class (DVC)	Battery: C PV: C AC: C Com: A	Battery: C PV: C AC: C Com: A
Mounting Method	Wall/Floor Mounted	Wall/Floor Mounted
Active Anti-islanding Method*8	SMS(Slip-mode frequency) +AFD	SMS(Slip-mode frequency) +AFD
Type of Electrical Supply System	three phase	three phase
Country of Manufacture	China	China
Certification		
Grid Standard	Please refer to the official website	
Safety Regulation		
EMC		

*1: When the input voltage ranges from 950V to 1000V, the inverter will enter the standby mode, and the voltage returns to950V to enter the normal operation state.
*2: Please refer to the user manual for the MPPT Voltage Range at nominal Power.
*3: According to the local grid regulation.
*4: GOODWE ESA series has internal bypass 63A passthrough ability to supprt whole

home backup solution. If the customer don't want to do any breaker upgrade, the main breaker size in GoodWe commissioning APP can be set as previous breaker size.
*5：GOODWE ESA series has internal bypass 80A passthrough ability to supprt whole home backup solution. If the customer don't want to do any breaker upgrade, the main breaker size in GoodWe commissioning APP can be set as previous breaker size.
*6：If the backup port is not used, select an appropriate circuit breaker based on the AC maximum output current.
*7:"Off grid"means the energy of backup output only comes from PV and battery. "On grid"means the energy of the backup output includes the energy from grid or generator(on-grid) side.
*8: AFDPF: Active Frequency Drift with Positive Feedback

Technical Data	**GW5K-BTA-G20**	**GW6K-BTA-G20**	**GW8K-BTA-G20**	**GW9.999K-BTA-G20**
Battery Side				
Battery Type	Li-Ion	Li-Ion	Li-Ion	Li-Ion
Nominal Voltage (V)	750	750	750	750
Voltage Range (V)	700-950	700-950	700-950	700-950
Start-up Voltage (V)	720	720	720	720
Number of Battery Inputs	1	1	1	1
Max. Continuous Charging Current (A)	6.7	8.1	10.7	13.4

Technical Data	GW5K-BTA-G20	GW6K-BTA-G20	GW8K-BTA-G20	GW9.999K-BTA-G20
Max. Continuous Discharging Current (A)	7.4	8.9	11.8	14.7
Max. Charging Power (kW)	5	6	8	10
Max. Discharging Power (kW)	5.5	6.6	8.8	11
AC Side (On-Grid)				
Rated Power (kW)	5	6	8	9.999
Max. Power (kW)	5	6	8	9.999
Rated Apparent Power to Grid (kVA)	5	6	8	9.999
Rated Apparent Power from Grid (kVA)	5	6	8	9.999
Max. Apparent Power to Grid (kVA)	5	6	8	9.999
Max. Apparent Power from Grid (kVA)	43.5	43.5	43.5	43.5

Technical Data	GW5K-BTA-G20	GW6K-BTA-G20	GW8K-BTA-G20	GW9.999K-BTA-G20
Nominal Voltage (V)	220/380, 230/400, 3L/N/PE	220/380, 230/400, 3L/N/PE	220/380, 230/400, 3L/N/PE	220/380, 230/400, 3L/N/PE
Voltage Range (V)	180 ~ 260 (According to local standard)	180 ~ 260 (According to local standard)	180 ~ 260 (According to local standard)	180 ~ 260 (According to local standard)
Nominal Frequency (Hz)	50/60	50/60	50/60	50/60
Frequency Range (Hz)	45~55 / 55~65	45~55 / 55~65	45~55 / 55~65	45~55 / 55~65
Rated Current to Grid (A)	7.6 at 380V 7.3 at 400V	9.1 at 380V 8.7 at 400V	12.2 at 380V 11.6 at 400V	15.2 at 380V 14.5 at 400V
Rated Current fromGrid (A)	7.6 at 380V 7.3 at 400V	9.1 at 380V 8.7 at 400V	12.2 at 380V 11.6 at 400V	15.2 at 380V 14.5 at 400V
Max. Current to Grid (A)	7.6 at 380V 7.3 at 400V	9.1 at 380V 8.7 at 400V	12.2 at 380V 11.6 at 400V	15.2 at 380V 14.5 at 400V
Max. Current from Grid (A)	63.0	63.0	63.0	63.0
Max. Output Fault Current (Peak and Duration) (A)	46.7@4μs	46.7@4μs	46.7@4μs	74.6@4μs
Inrush Current (Peak and Duration) (A)	21.3@5ms	21.3@5ms	21.3@5ms	25.4@5ms
THDi	<3%	<3%	<3%	<3%

Technical Data	GW5K-BTA-G20	GW6K-BTA-G20	GW8K-BTA-G20	GW9.999K-BTA-G20
Maximum Output Overcurrent Protection (A)	46.7	46.7	46.7	74.6
Type of Voltage	a.c.	a.c.	a.c.	a.c.
Back-up Side				
Rated Output Apparent Power (kVA)	5	6	8	10
Max. Output Apparent Power (kVA)	Off-grid: 5.5 (10.0, 10s), on-grid: 43.5	Off-grid: 6.6(12, 10s), on-grid：43.5	Off-grid: 8.8 (16.0, 10s), on-grid: 43.5	Off-grid: 11(20.0, 10s), on-grid: 43.5
Nominal Output Voltage (V)	220/380, 230/400, 3L/N/PE	220/380, 230/400, 3L/N/PE	220/380, 230/400, 3L/N/PE	220/380, 230/400, 3L/N/PE
Nominal Output Frequency (Hz)	50/60	50/60	50/60	50/60
Frequency Range (Hz)	45~55 / 55~65	45~55 / 55~65	45~55 / 55~65	45~55 / 55~65
Rated Output Current (A)	7.6 at 380V 7.3 at 400V	9.1 at 380V 8.7 at 400V	12.2 at 380V 11.6 at 400V	15.2 at 380V 14.5 at 400V
Max. Output Current (A)*3	Off-grid: 11.4, on-grid: 63	Off-grid: 13.7, on-grid:63	Off-grid: 18.2, on-grid: 63	Off-grid: 22.8, on-grid:63
Max. Output Fault Current (Peak and Duration) (A)	46.7@4μs	46.7@4μs	46.7@4μs	74.6@4μs

Technical Data	GW5K-BTA-G20	GW6K-BTA-G20	GW8K-BTA-G20	GW9.999K-BTA-G20
Inrush Current (Peak and Duration) (A)	21.3@5ms	21.3@5ms	21.3@5ms	25.4@5ms
Maximum Overcurrent Protection (A)	46.7	46.7	46.7	74.6
THDv (@Linear Load)	<3%	<3%	<3%	<3%
On/Off-grid Switching Time（ms）	<4	<4	<4	<4
Efficiency				
Max. Efficiency	98.00%	98.00%	98.00%	98.10%
European Efficiency	96.40%	96.90%	97.10%	97.20%
CEC Efficiency	NA	NA	NA	NA
Max. Battery to AC Efficiency	98.00%	98.00%	98.00%	98.00%
Protection				
Residual Current Monitoring	Integrated	Integrated	Integrated	Integrated
Battery Reverse Polarity Protection	Integrated	Integrated	Integrated	Integrated

Technical Data	GW5K-BTA-G20	GW6K-BTA-G20	GW8K-BTA-G20	GW9.999K-BTA-G20
Anti-islanding Protection	Integrated	Integrated	Integrated	Integrated
AC Overcurrent Protection	Integrated	Integrated	Integrated	Integrated
AC Short Circuit Protection	Integrated	Integrated	Integrated	Integrated
AC Overvoltage Protection	Integrated	Integrated	Integrated	Integrated
AC Surge Protection	Type II	Type II	Type II	Type II
Remote Shutdown	Integrated	Integrated	Integrated	Integrated
General Data				
Power Factor	0.8 leading ... 0.8 lagging	0.8 leading ... 0.8 lagging	0.8 leading ... 0.8 lagging	0.8 leading ... 0.8 lagging
Operating Temperature Range (℃)	-35~+60	-35~+60	-35~+60	-35~+60
Operating Environment	Indoor/Outdoor	Indoor/Outdoor	Indoor/Outdoor	Indoor/Outdoor
Relative Humidity	0~100%	0~100%	0~100%	0~100%
Max. Operating Altitude (m)	4000 (>2000 derating)	4000 (>2000 derating)	4000 (>2000 derating)	4000 (>2000 derating)

Technical Data	GW5K-BTA-G20	GW6K-BTA-G20	GW8K-BTA-G20	GW9.999K-BTA-G20
Cooling Method	Smart Fan Cooling	Smart Fan Cooling	Smart Fan Cooling	Smart Fan Cooling
User Interface	LED, WLAN+APP	LED, WLAN+APP	LED, WLAN+APP	LED, WLAN+APP
Communication with BMS	CAN	CAN	CAN	CAN
Communication	RS485, WiFi+LAN+Bluetooth, 4G+Bluetooth(Optional)	RS485, WiFi+LAN+Bluetooth, 4G+Bluetooth(Optional)	RS485, WiFi+LAN+Bluetooth, 4G+Bluetooth(Optional)	RS485, WiFi+LAN+Bluetooth, 4G+Bluetooth(Optional)
Communication Protocols	Modbus-RTU, Modbus-TCP	Modbus-RTU, Modbus-TCP	Modbus-RTU, Modbus-TCP	Modbus-RTU, Modbus-TCP
Weight (kg)	30	30	30	30
Dimension (W×H×D mm)	800*340*270	800*340*270	800*340*270	800*340*270
Noise Emission (dB)	≤35	≤35	≤35	≤35
Topology	Non-isolated	Non-isolated	Non-isolated	Non-isolated
Self-consumption at Night (W)	≤10	≤10	≤10	≤10
Conditional Short-circuit Current (A)	6000	6000	6000	6000
Ingress Protection Rating	IP66	IP66	IP66	IP66

Technical Data	GW5K-BTA-G20	GW6K-BTA-G20	GW8K-BTA-G20	GW9.999K-BTA-G20
DC Connector	MC4, VACONN Terminal	MC4, VACONN Terminal	MC4, VACONN Terminal	MC4, VACONN Terminal
AC Connector	VACONN Terminal	VACONN Terminal	VACONN Terminal	VACONN Terminal
Environmental Category	4K4H	4K4H	4K4H	4K4H
Pollution Degree	III	III	III	III
Overvoltage Category	DC II / AC III	DC II / AC III	DC II / AC III	DC II / AC III
Protective Class	I	I	I	I
Storage Temperature (℃)	-40~+70	-40~+70	-40~+70	-40~+70
The Decisive Voltage Class (DVC)	Battery: C	Battery: C	Battery: C	Battery: C
	AC: C	AC: C	AC: C	AC: C
	Com: A	Com: A	Com: A	Com: A
Mounting Method	Wall/Floor Mounted	Wall/Floor Mounted	Wall/Floor Mounted	Wall/Floor Mounted
Active Anti-islanding Method	SMS(Slip-mode frequency) +AFD*4	SMS(Slip-mode frequency) +AFD*4	SMS(Slip-mode frequency) +AFD*4	SMS(Slip-mode frequency) +AFD*4
Type of Electrical Supply System	three phase	three phase	three phase	three phase
Country of Manufacture	China	China	China	China

Technical Data	GW5K-BTA-G20	GW6K-BTA-G20	GW8K-BTA-G20	GW9.999K-BTA-G20
Certification				
Grid Standard	Please refer to the official website			
Safety Regulation				
EMC				

Technical Data	GW10K-BTA-G20	GW12K-BTA-G20	GW15K-BTA-G20	GW20K-BTA-G20
Battery Side				
Battery Type	Li-Ion	Li-Ion	Li-Ion	Li-Ion
Nominal Voltage (V)	750	750	750	750
Voltage Range (V)	700-950	700-950	700-950	700-950
Start-up Voltage (V)	720	720	720	720
Number of Battery Inputs	1	1	1	1
Max. Continuous Charging Current (A)	13.4	16.1	20.1	26.7
Max. Continuous Discharging Current (A)	14.7	17.7	22.1	29.4
Max. Charging Power (kW)	10	12	15	20

Technical Data	GW10K-BTA-G20	GW12K-BTA-G20	GW15K-BTA-G20	GW20K-BTA-G20
Max. Discharging Power (kW)	11	13.2	16.5	22
AC Side (On-Grid)				
Rated Power (kW)	10	12	15	20
Max. Power (kW)	10	12	15	20
Rated Apparent Power to Grid (kVA)	10	12	15	20
Rated Apparent Power from Grid (kVA)	10	12	15	20
Max. Apparent Power to Grid (kVA)	10	12	15	20
Max. Apparent Power from Grid (kVA)	43.5	43.5	43.5	43.5
Nominal Voltage (V)	220/380, 230/400, 3L/N/PE	220/380, 230/400, 3L/N/PE	220/380, 230/400, 3L/N/PE	220/380, 230/400, 3L/N/PE
Voltage Range (V)	180 ~ 260 (According to local standard)	180 ~ 260 (According to local standard)	180 ~ 260 (According to local standard)	180 ~ 260 (According to local standard)
Nominal Frequency (Hz)	50/60	50/60	50/60	50/60

Technical Data	GW10K-BTA-G20	GW12K-BTA-G20	GW15K-BTA-G20	GW20K-BTA-G20
Frequency Range (Hz)	45~55 / 55~65	45~55 / 55~65	45~55 / 55~65	45~55 / 55~65
Rated Current to Grid (A)	15.2 at 380V 14.5 at 400V	18.2 at 380V 17.4 at 400V	22.8 at 380V 21.8 at 400V	30.4 at 380V 29.0 at 400V
Rated Current fromGrid (A)	15.2 at 380V 14.5 at 400V	18.2 at 380V 17.4 at 400V	22.8 at 380V 21.8 at 400V	30.4 at 380V 29.0 at 400V
Max. Current to Grid (A)	15.2 at 380V 14.5 at 400V	18.2 at 380V 17.4 at 400V	22.8 at 380V 21.8 at 400V	30.4 at 380V 29.0 at 400V
Max. Current from Grid (A)	63.0	63.0	63.0	63.0
Max. Output Fault Current (Peak and Duration) (A)	74.6@4μs	74.6@4μs	83.3@4μs	83.3@4μs
Inrush Current (Peak and Duration) (A)	25.4@5ms	25.4@5ms	29.1@5ms	29.1@5ms
THDi	<3%	<3%	<3%	<3%
Maximum Output Overcurrent Protection (A)	74.6	74.6	83.3	83.3
Type of Voltage	a.c.	a.c.	a.c.	a.c.
Back-up Side				
Rated Output Apparent Power (kVA)	10	12	15	20

Technical Data	GW10K-BTA-G20	GW12K-BTA-G20	GW15K-BTA-G20	GW20K-BTA-G20
Max. Output Apparent Power (kVA)*6	Off-grid: 11(20.0, 10s), on-grid: 43.5	Off-grid: 13.2(24, 10s), on-grid: 43.5	Off-grid: 16.5(30, 10s), on-grid: 43.5	Off-grid: 22(30.0, 10s), on-grid: 43.5
Nominal Output Voltage (V)	220/380, 230/400, 3L/N/PE	220/380, 230/400, 3L/N/PE	220/380, 230/400, 3L/N/PE	220/380, 230/400, 3L/N/PE
Nominal Output Frequency (Hz)	50/60	50/60	50/60	50/60
Frequency Range (Hz)	45~55 / 55~65	45~55 / 55~65	45~55 / 55~65	45~55 / 55~65
Rated Output Current (A)	15.2 at 380V 14.5 at 400V	18.2 at 380V 17.4 at 400V	22.8 at 380V 21.8 at 400V	30.4 at 380V 29.0 at 400V
Max. Output Current (A)*3	Off-grid: 22.8, on-grid: 63	Off-grid: 27.3, on-grid: 63	Off-grid: 33.4, on-grid: 63	Off-grid: 33.4, on-grid: 63
Max. Output Fault Current (Peak and Duration) (A)	74.6@4μs	74.6@4μs	83.3@4μs	83.3@4μs
Inrush Current (Peak and Duration) (A)	25.4@5ms	25.4@5ms	29.1@5ms	29.1@5ms
Maximum Overcurrent Protection (A)	74.6	74.6	83.3	83.3
THDv (@Linear Load)	<3%	<3%	<3%	<3%

Technical Data	GW10K-BTA-G20	GW12K-BTA-G20	GW15K-BTA-G20	GW20K-BTA-G20
On/Off-grid Switching Time（ms）	<4	<4	<4	<4
Efficiency				
Max. Efficiency	98.10%	98.10%	98.10%	98.10%
European Efficiency	97.20%	97.20%	97.30%	97.30%
CEC Efficiency	NA	NA	NA	NA
Max. Battery to AC Efficiency	98.00%	98.00%	98.00%	98.00%
MPPT Efficiency	NA	NA	NA	NA
Protection				
Residual Current Monitoring	Integrated	Integrated	Integrated	Integrated
Battery Reverse Polarity Protection	Integrated	Integrated	Integrated	Integrated
Anti-islanding Protection	Integrated	Integrated	Integrated	Integrated
AC Overcurrent Protection	Integrated	Integrated	Integrated	Integrated

Technical Data	GW10K-BTA-G20	GW12K-BTA-G20	GW15K-BTA-G20	GW20K-BTA-G20
AC Short Circuit Protection	Integrated	Integrated	Integrated	Integrated
AC Overvoltage Protection	Integrated	Integrated	Integrated	Integrated
AC Surge Protection	Type II	Type II	Type II	Type II
Remote Shutdown	Integrated	Integrated	Integrated	Integrated
General Data				
Power Factor	0.8 leading ... 0.8 lagging	0.8 leading ... 0.8 lagging	0.8 leading ... 0.8 lagging	0.8 leading ... 0.8 lagging
Operating Temperature Range (℃)	-35~+60	-35~+60	-35~+60	-35~+60
Operating Environment	Indoor/Outdoor	Indoor/Outdoor	Indoor/Outdoor	Indoor/Outdoor
Relative Humidity	0~100%	0~100%	0~100%	0~100%
Max. Operating Altitude (m)	4000 (>2000 derating)	4000 (>2000 derating)	4000 (>2000 derating)	4000 (>2000 derating)
Cooling Method	Smart Fan Cooling	Smart Fan Cooling	Smart Fan Cooling	Smart Fan Cooling
User Interface	LED, WLAN+APP	LED, WLAN+APP	LED, WLAN+APP	LED, WLAN+APP

Technical Data	GW10K-BTA-G20	GW12K-BTA-G20	GW15K-BTA-G20	GW20K-BTA-G20
Communication with BMS	CAN	CAN	CAN	CAN
Communication	RS485, WiFi+LAN+Bluetooth, 4G+Bluetooth(Optional)	RS485, WiFi+LAN+Bluetooth, 4G+Bluetooth(Optional)	RS485, WiFi+LAN+Bluetooth, 4G+Bluetooth(Optional)	RS485, WiFi+LAN+Bluetooth, 4G+Bluetooth(Optional)
Communication Protocols	Modbus-RTU, Modbus-TCP	Modbus-RTU, Modbus-TCP	Modbus-RTU, Modbus-TCP	Modbus-RTU, Modbus-TCP
Weight (kg)	30	30	30	30
Dimension (W×H×D mm)	800*340*270	800*340*270	800*340*270	800*340*270
Noise Emission (dB)	≤35	≤35	≤40	≤40
Topology	Non-isolated	Non-isolated	Non-isolated	Non-isolated
Self-consumption at Night (W)	≤10	≤10	≤10	≤10
Conditional Short-circuit Current (A)	6000	6000	6000	6000
Ingress Protection Rating	IP66	IP66	IP66	IP66
DC Connector	MC4, VACONN Terminal	MC4, VACONN Terminal	MC4, VACONN Terminal	MC4, VACONN Terminal
AC Connector	VACONN Terminal	VACONN Terminal	VACONN Terminal	VACONN Terminal

Technical Data	GW10K-BTA-G20	GW12K-BTA-G20	GW15K-BTA-G20	GW20K-BTA-G20
Environmental Category	4K4H	4K4H	4K4H	4K4H
Pollution Degree	III	III	III	III
Overvoltage Category	DC II / AC III	DC II / AC III	DC II / AC III	DC II / AC III
Protective Class	I	I	I	I
Storage Temperature (℃)	-40~+70	-40~+70	-40~+70	-40~+70
The Decisive Voltage Class (DVC)	Battery: C	Battery: C	Battery: C	Battery: C
	AC: C	AC: C	AC: C	AC: C
	Com: A	Com: A	Com: A	Com: A
Mounting Method	Wall/Floor Mounted	Wall/Floor Mounted	Wall/Floor Mounted	Wall/Floor Mounted
Active Anti-islanding Method	SMS(Slip-mode frequency) +AFD*4	SMS(Slip-mode frequency) +AFD*4	SMS(Slip-mode frequency) +AFD*4	SMS(Slip-mode frequency) +AFD*4
Type of Electrical Supply System	three phase	three phase	three phase	three phase
Country of Manufacture	China	China	China	China
Certification				
Grid Standard				

Technical Data	GW10K-BTA-G20	GW12K-BTA-G20	GW15K-BTA-G20	GW20K-BTA-G20
Safety Regulation	Please refer to the official website			
EMC				

Technical Data	GW25K-BTA-G20	GW29.999K-BTA-G20	GW30K-BTA-G20
Battery Side			
Battery Type	Li-Ion	Li-Ion	Li-Ion
Nominal Voltage (V)	750	750	750
Voltage Range (V)	700-950	700-950	700-950
Start-up Voltage (V)	720	720	720
Number of Battery Inputs	1	1	1
Max. Continuous Charging Current (A)	33.3	40.0	40.0
Max. Continuous Discharging Current (A)	36.7	44.1	44.1
Max. Charging Power (kW)	25	30	30
Max. Discharging Power (kW)	27.5	33	33
AC Side (On-Grid)			
Rated Power (kW)	25	29.999	30

Technical Data	GW25K-BTA-G20	GW29.999K-BTA-G20	GW30K-BTA-G20
Max. Power (kW)	25	29.999	30
Rated Apparent Power to Grid (kVA)	25	29.999	30
Rated Apparent Power from Grid (kVA)	25	29.999	30
Max. Apparent Power to Grid (kVA)	25	29.999	30
Max. Apparent Power from Grid (kVA)	55.2	55.2	55.2
Nominal Voltage (V)	220/380, 230/400, 3L/N/PE	220/380, 230/400, 3L/N/PE	220/380, 230/400, 3L/N/PE
Voltage Range (V)	180 ~ 260 (According to local standard)	180 ~ 260 (According to local standard)	180 ~ 260 (According to local standard)
Nominal Frequenc y (Hz)	50/60	50/60	50/60
Frequency Range (Hz)	45~55 / 55~65	45~55 / 55~65	45~55 / 55~65
Rated Current to Grid (A)	37.9 at 380V 36.3 at 400V	45.5 at 380V 43.5 at 400V	45.5 at 380V 43.5 at 400V
Rated Current fromGrid (A)	37.9 at 380V 36.3 at 400V	45.5 at 380V 43.5 at 400V	45.5 at 380V 43.5 at 400V
Max. Current to Grid (A)	37.9 at 380V 36.3 at 400V	45.5 at 380V 43.5 at 400V	45.5 at 380V 43.5 at 400V
Max. Current from Grid (A)	80.0	80.0	80.0

Technical Data	GW25K-BTA-G20	GW29.999K-BTA-G20	GW30K-BTA-G20
Max. Output Fault Current (Peak and Duration) (A)	125@4μs	125@4μs	125@4μs
Inrush Current (Peak and Duration) (A)	32.3@5ms	32.3@5ms	32.3@5ms
THDi	<3%	<3%	<3%
Maximum Output Overcurrent Protection (A)	125	125	125
Type of Voltage	a.c.	a.c.	a.c.
Back-up Side			
Rated Output Apparent Power (kVA)	25	30	30
Max. Output Apparent Power (kVA)*6	Off-grid: 27.5(45.0, 10s), on-grid: 55.2	Off-grid: 33(45.0, 10s), on-grid: 55.2	Off-grid: 33(45.0, 10s), on-grid: 55.2
Nominal Output Voltage (V)	220/380, 230/400, 3L/N/PE	220/380, 230/400, 3L/N/PE	220/380, 230/400, 3L/N/PE
Nominal Output Frequency (Hz)	50/60	50/60	50/60
Frequency Range (Hz)	45~55 / 55~65	45~55 / 55~65	45~55 / 55~65
Rated Output Current (A)	37.9 at 380V 36.3 at 400V	45.5 at 380V 43.5 at 400V	45.5 at 380V 43.5 at 400V
Max. Output Current (A)*3	Off-grid: 50.0, on-grid: 80	Off-grid: 50.0, on-grid: 80	Off-grid: 50.0, on-grid: 80

Technical Data	GW25K-BTA-G20	GW29.999K-BTA-G20	GW30K-BTA-G20
Max. Output Fault Current (Peak and Duration) (A)	125@4μs	125@4μs	125@4μs
Inrush Current (Peak and Duration) (A)	32.3@5ms	32.3@5ms	32.3@5ms
Maximum Overcurrent Protection (A)	125	125	125
THDv (@Linear Load)	<3%	<3%	<3%
On/Off-grid Switching Time（ms）	<4	<4	<4
Efficiency			
Max. Efficiency	98.20%	98.20%	98.20%
European Efficiency	97.40%	97.40%	97.40%
CEC Efficiency	NA	NA	NA
Max. Battery to AC Efficiency	98.00%	98.00%	98.00%
Protection			
Residual Current Monitoring	Integrated	Integrated	Integrated
Battery Reverse Polarity Protection	Integrated	Integrated	Integrated
Anti-islanding Protection	Integrated	Integrated	Integrated

Technical Data	GW25K-BTA-G20	GW29.999K-BTA-G20	GW30K-BTA-G20
AC Overcurrent Protection	Integrated	Integrated	Integrated
AC Short Circuit Protection	Integrated	Integrated	Integrated
AC Overvoltage Protection	Integrated	Integrated	Integrated
AC Surge Protection	Type II	Type II	Type II
Remote Shutdown	Integrated	Integrated	Integrated
General Data			
Power Factor	0.8 leading ... 0.8 lagging	0.8 leading ... 0.8 lagging	0.8 leading ... 0.8 lagging
Operating Temperature Range (℃)	-35~+60	-35~+60	-35~+60
Operating Environment	Indoor/Outdoor	Indoor/Outdoor	Indoor/Outdoor
Relative Humidity	0~100%	0~100%	0~100%
Max. Operating Altitude (m)	4000 (>2000 derating)	4000 (>2000 derating)	4000 (>2000 derating)
Cooling Method	Smart Fan Cooling	Smart Fan Cooling	Smart Fan Cooling
User Interface	LED, WLAN+APP	LED, WLAN+APP	LED, WLAN+APP
Communication with BMS	CAN	CAN	CAN

Technical Data	GW25K-BTA-G20	GW29.999K-BTA-G20	GW30K-BTA-G20
Communication	RS485, WiFi+LAN+Bluetooth, 4G+Bluetooth(Optional)	RS485, WiFi+LAN+Bluetooth, 4G+Bluetooth(Optional)	RS485, WiFi+LAN+Bluetooth, 4G+Bluetooth(Optional)
Communication Protocols	Modbus-RTU, Modbus-TCP	Modbus-RTU, Modbus-TCP	Modbus-RTU, Modbus-TCP
Weight (kg)	32	32	32
Dimension (W×H×D mm)	800*340*270	800*340*270	800*340*270
Noise Emission (dB)	≤45	≤45	≤45
Topology	Non-isolated	Non-isolated	Non-isolated
Self-consumption at Night (W)	≤10	≤10	≤10
Conditional Short-circuit Current (A)	6000	6000	6000
Ingress Protection Rating	IP66	IP66	IP66
DC Connector	MC4, VACONN Terminal	MC4, VACONN Terminal	MC4, VACONN Terminal
AC Connector	VACONN Terminal	VACONN Terminal	VACONN Terminal
Environmental Category	4K4H	4K4H	4K4H
Pollution Degree	IV	IV	IV
Overvoltage Category	DC II / AC III	DC II / AC III	DC II / AC III

Technical Data	GW25K-BTA-G20	GW29.999K-BTA-G20	GW30K-BTA-G20
Protective Class	I	I	I
Storage Temperature (℃)	-40~+70	-40~+70	-40~+70
The Decisive Voltage Class (DVC)	Battery: C	Battery: C	Battery: C
	AC: C	AC: C	AC: C
	Com: A	Com: A	Com: A
Mounting Method	Wall/Floor Mounted	Wall/Floor Mounted	Wall/Floor Mounted
Active Anti-islanding Method	SMS(Slip-mode frequency) +AFD*4	SMS(Slip-mode frequency) +AFD*4	SMS(Slip-mode frequency) +AFD*4
Type of Electrical Supply System	three phase	three phase	three phase
Country of Manufacture	China	China	China
Certification			
Grid Standard	Please refer to the official website		
Safety Regulation			
EMC			

*1: When the input voltage ranges from 950V to 1000V, the inverter will enter the standby mode, and the voltage returns to950V to enter the normal operation state.
*2: Please refer to the user manual for the MPPT Voltage Range at nominal Power.
*3: The Max. Output Current in off-grid operation accounts for a three-phase maximum 150% unbalanced capability.
*4: AFDPF: Active Frequency Drift with Positive Feedback, AQDPF: Active Q Drift with Positive Feedback.

9.2 Battery Technical Data

Technical Data	GW5.1-BAT-D-G20	GW8.3-BAT-D-G20	GW5.1-BAT-D-G21	GW8.3-BAT-D-G21
Rated Energy (kWh)	5.12	8.32	5.12	8.32
Usable Energy (kWh)*1	5	8	5	8
Battery Type	LFP ($LiFePO_4$)			
Operating Voltage Range (V) (single phase system)	350~550			
Operating Voltage Range (V) (three phase system)	700~950			
Max. Input Current (System) (A)	12	19	12	19
Max. Output Current (System) (A)	13.2	21	13.2	21
Max. Input Power (System) (kW)*2	5	8	5	8
Max. Output Power (System) (kW)*2	5	8	5	8
Peak.Output Power (System) (kW)*2	7.5 @10s	12 @10s	7.5 @10s	12 @10s
Charging Temperature Range (°C)	-18~55		2~55	
Discharging Temperature Range (°C)	-20~55		-20~55	
Relative Humidity	5-95%			
Max. Operating Altitude (m)	4000			

Technical Data		GW5.1-BAT-D-G20	GW8.3-BAT-D-G20	GW5.1-BAT-D-G21	GW8.3-BAT-D-G21
Noise Emission (dB)		≤29			
Communication		CAN			
Weight (kg)		57.5±1	79±1	57.5±1	79±1
Dimensions (W×H×D mm)		800*326*270			
Optional Function Configuration		heating		/	
Ingress Protection		IP66			
Storage Temperature (℃)		-20 ~55			
Max. Storage time		12 months (-20℃~35℃)			
		6 months (35℃~45℃)			
Scalability		6 pcs			
Mounting Method		Floor stacked / Wall-mounted			
Cycle Life		≥6000 (25±2℃, 0.5C, 90%DOD, 70%EOL)			
Country of Manufacture		China			
Standard and Certification	Safety	IEC62619, IEC60730, EN62477，IEC63056，IEC62040，CE, CEC, VDE2510			
	EMC	CE, RCM			
	Transportation	UN38.3 ADR			

Technical Data	GW6.0-BAT-D-G20	GW9.0-BAT-D-G20
Battery Type	LFP (LiFePO4)	
Rated Capacity (Ah)	314Ah	
Rated Energy (kWh)	6	9

Technical Data	GW6.0-BAT-D-G20	GW9.0-BAT-D-G20
Usable Energy (kWh)*1	5.9	8.85
Nominal Voltage(V) (Battery)	19.2	28.8
Voltage Range(V) (Battery)	16.2~21.9	24.3~32.8
Operating Voltage Range (V) (single phase system)	350~550	
Operating Voltage Range (V) (three phase system)	700~950	
Max. Input Current (System) (A)	7.1	10.7
Max. Output Current (System) (A)	7.9	11.8
Max. Input Power (System) (kW)*2	3	4.5
Max. Output Power (System) (kW)*2	3	4.5
Peak Output Power (System) (kW)*2	4.5 (10s)	6.75 (10s)
Charging Temperature Range(℃)	-20~55	
Discharging Temperature Range (℃)	-20~55	
Relative Humidity	4-100%	
Max. Operating Altitude (m)	4000	
Noise Emission (dB)	≤27	
Communication	CAN&485	
Weight (kg)	61±1kg	77±1kg
Useable Extinguishing Agent	CO2, H2O	
Crucial Material	LiFePO4, C, Cu, LiPF6, Al, (C3H6)n	
Ingress Protection	IP66	
Protective Class	Ⅰ	
Dimensions (W×H×D mm)	800*326*270	

Technical Data		GW6.0-BAT-D-G20	GW9.0-BAT-D-G20
Function Configuration		Heating (Integrated); Aerosol fire extinguishing (Integrated)	
Storage Temperature (℃)		-20 ~55	
Max. Storage time		12 months (-20℃~35℃) 6 months (35℃~45℃)	
Scalability*3		12P	
Mounting Method		Floor stacked / Wall-mounted / Grounded	
Cycle Life		≥6000 （25±2℃ 0.5C 90%DOD 70%EOL）	
Country of Manufacture		China	
Standard and Certification	Safety	IEC62619, IEC60730, EN62477, IEC63056, IEC62040, CE, CEC, Regulation 2023/1542 , VDE2510-50	
	EMC	CE, RCM	
	Transportation	UN38.3 ADR	

*1: Test conditions, 100% DOD (cell 2.85~3.6V voltage range), 0.2P charge & discharge at 25±2 °C for battery system at the beginning of life. Usable energy is defined by its initial design value. Actual available energy may vary depending on charge/discharge rate, environmental conditions (e.g. temperature), transport and storage factors.
*2: Max. Input Power /Max. Output Power/Peak.Output Power derating will occur related to Temperature and SOC.
*3 For single-column stacked installations, the maximum number of parallel units is 6.

9.3 Smart Meter Technical Data

9.3.1 GM330

model	GM330
Measurement Range	

model	GM330
Supported Grid Types	1P2W/3P3W/3P4W
Operating voltage (Vac)*	3P4W：100~472 L-N 3P3W：100~472 L-L
Frequency (Hz)	50/60
CT ratio	nA: 5A
Accuracy Parameters	
voltage/current	Class 0.5
Active Energy	Class 0.5
Reactive Energy	Class 1
Communication Parameters	
Communication Method	RS485
Communication Distance (m)	1000
General Parameters	
Dimensions (W*H*D mm)	72*85*72
Housing	4-module
Weight (g)	240
Mounting Method	DIN Rail
User Interface	4 LEDs, Reset Button
Power Consumption (W)	＜5
Environmental Parameters	
IP Rating	IP20
Operating Temperature Range (°C)	-30-+70

model	GM330
Storage Temperature Range (°C)	-30-+70
Relative Humidity (non-condensing)	0-95%
Max. Operating Altitude (m)	3000

*Supports 1.1 times voltage access.
*The standard CT for the meter has been uniformly updated to the 120A:40mA specification. Meters equipped with the 200A:50mA specification CT will no longer be sold after June 2026.

9.3.2 GMK330

model	GMK330
Measurement Range	
Supported Grid Types	1P2W/3P3W/3P4W
Operating voltage (Vac)*	3P4W：90~264 L-N 3P3W：90~264 L-L
Frequency (Hz)	50/60
CT ratio	120A: 40mA 200A: 50mA*
Number of CTs	3
Accuracy Parameters	
voltage/current	Class 0.5
Active Energy	Class 0.5
Reactive Energy	Class 1
Communication Parameters	
Communication Method	RS485

model	GMK330
Communication Distance (m)	1000
General Parameters	
Dimensions (W*H*D mm)	72*85*72
Housing	4-module
Weight (g)	240
Mounting Method	DIN Rail
User Interface	4 LEDs, Reset Button
Power Consumption (W)	< 5
Environmental Parameters	
IP Rating	IP20
Operating Temperature Range (℃)	-30-+70
Storage Temperature Range (℃)	-30-+70
Relative Humidity (non-condensing)	0-95%
Max. Operating Altitude (m)	3000

*Supports 1.1 times rated voltage connection.
*The standard CT for the meter has been uniformly changed to the 120A:40mA specification. Meters equipped with CTs of the 200A:50mA specification will no longer be sold after June 2026.

9.4 Smart Dongle Technical Data

9.4.1 WiFi/LAN Kit-20

technical parameter		WiFi/LAN Kit-20
Output Voltage (V)		5
Power Consumption (W)		≤2
Communication Interface		USB
Communication Parameters	Ethernet	10M/100Mbps Auto-negotiation
	Wireless	IEEE 802.11 b/g/n @2.4 GHz
	Bluetooth	Bluetooth V4.2 BR/EDR and Bluetooth LE Standard
Mechanical Parameters	Dimensions (W×H×D mm)	48.3*159.5*32.1
	Weight (g)	82
	Ingress Protection Rating	IP65
	Mounting Method	USB Port Plug and Play
Operating Temperature Range (℃)		-30~+60
Storage Temperature Range (℃)		-40~+70
Relative Humidity		0-95%
Max. Operating Altitude (m)		4000

9.4.2 4G Kit-G20

Product Model	4G Kit-G20
Device Management	
Maximum Supported Inverter Quantity	1
Power Parameters	
Input Voltage (V)	5
Power Consumption (W)	≤5
Interface Method	USB
Communication Parameters	
4G/3G/2G	LTE-FDD: B1/2/3/4/5/7/8/12/13/18/19/20/25/26/28/66 LTE-TDD: B34/38/39/40/41 WCDMA: B1/2/4/5/6/8/19 GSM/EDGE: B2/3/5/8
GNSS Positioning	/
Bluetooth	Bluetooth V5.0

Product Model	4G Kit-G20
Mechanical Parameters	
Dimensions (Width × Height × Thickness mm)	48.3*328*32.3 (Including external antenna)
Weight (g)	100 (Including external antenna)
indicator	LED* 2
Mounting Method	Plug and Play
SIM Card Size	Micro sim, 15mm*12mm
Environmental Parameters	
Operating Temperature Range (℃)	-30~+65
Storage Temperature Range (℃)	-40~+70
Relative Humidity	0-100%
IP Rating	IP66
Max. Operating Altitude (m)	4000
Standards Met	
Certification	CE-RED (EN18031), RCM

10 Appendix

10.1 FAQ

10.1.1 How to conduct auxiliary detection for smart meters/CT?

The meter detection function can detect whether the meter CT is connected correctly and the current operating status of the meter and CT.

1. Navigate to the detection page via **[Home]** > **[Settings]** > **[Meter/CT Auxiliary Detection]**.
2. Click Start Detection, wait for the detection to complete, and then view the detection results.

10.1.2 How to Upgrade the Device Version

Through firmware information, you can view or upgrade:
The inverter's DSP version, ARM version, communication module software version, battery's BMS version, DCDC version, etc.

- **Prompt Upgrade:**

When the user opens the App, an upgrade prompt pops up on the home page. The user can choose whether to upgrade. If they choose to upgrade, they can complete the upgrade by following the on-screen instructions.

- **Regular Upgrade:**

Go to **[Home]** > **[Settings]** > **[Firmware Information]** to enter the firmware information viewing interface.
Click "Check for Updates". If a new version is available, complete the upgrade by following the on-screen instructions.

- **Forced Upgrade:**

The App pushes upgrade information. The user must upgrade according to the prompts; otherwise, the App cannot be used. Complete the upgrade by following the

on-screen instructions.

Inverter Software Version Upgrade

- The inverter supports software upgrade via a USB drive.
- Before using a USB drive to upgrade the device, please contact the after-sales service center to obtain the software upgrade package and upgrade method.

10.2 Explanation of Terms

- **Definition of Overvoltage Categories**
  - **Overvoltage Category I**: Equipment connected to circuits where measures are taken to limit transient overvoltages to a suitably low level.
  - **Overvoltage Category II**: Energy-consuming equipment supplied from a fixed electrical installation. This category includes appliances, portable tools, and other household and similar loads. If special requirements for reliability and suitability of such equipment exist, Overvoltage Category III applies.
  - **Overvoltage Category III**: Equipment in fixed electrical installations where special requirements for reliability and suitability must be met. This includes switching devices in fixed installations and industrial equipment permanently connected to fixed electrical installations.
  - **Overvoltage Category IV**: Equipment used at the origin of the electrical installation. This includes meters and primary overcurrent protection devices, etc.
- **Definition of Damp Location Categories**

Environmental Parameters	Level		
	3K3	4K2	4K4H
Temperature Range	0~+40℃	-33~+40℃	-33~+40℃
Humidity Range	5% to 85%	15% to 100%	4% to 100%

- **Definition of Environmental Categories:**
  - **Outdoor Inverter**: Ambient air temperature range from -25°C to +60°C, suitable for Pollution Degree 3 environments.
  - **Indoor Type II Inverter**: Ambient air temperature range from -25°C to +40°C, suitable for Pollution Degree 3 environments.
  - **Indoor Type I Inverter**: Ambient air temperature range from 0°C to +40°C,

suitable for Pollution Degree 2 environments.

- **Definition of Pollution Degree Categories**
  - **Pollution Degree 1**: No pollution or only dry, non-conductive pollution.
  - **Pollution Degree 2**: Normally only non-conductive pollution occurs. Temporary conductivity caused by condensation must be expected occasionally.
  - **Pollution Degree 3**: Conductive pollution occurs, or dry non-conductive pollution becomes conductive due to condensation.
  - **Pollution Degree 4**: Persistent conductive pollution occurs, for example, due to conductive dust, rain, or snow.

10.3 Battery SN Code Meaning



The 11th to 14th digits of the product SN code represent the production time code. The production date in the above image is 2023-08-08

- The 11th and 12th digits are the last two digits of the production year, e.g., 2023 is represented as 23;
- The 13th digit is the production month, e.g., August is represented as 8; Details are as follows:

Month	Jan-Sep	Oct	Nov	Dec
Month Code	1~9	A	B	C

- The 14th digit is the production date, e.g., the 8th day is represented as 8; Numbers are preferred for representation, e.g., 1~9 represent the 1st to 9th days, A represents the 10th day, and so on. Among them, the letters I and O are not used to avoid confusion. Details are as follows:

Production Day	1	2	3	4	5	6	7	8	9

Code	1	2	3	4	5	6	7	8	9

Production Date	10	11	12	13	14	15	16	17	18
Code	A	B	C	D	E	F	G	H	J

Production Date	21	22	23	24	25	26	27	28	29
Code	M	N	P	Q	R	S	T	U	V

11 Contact Information

GoodWe Technologies Co., Ltd.
90 Zijin Road, Suzhou New District, China
400-998-1212
www.goodwe.com
service@goodwe.com