HomeKit
USER MANUAL

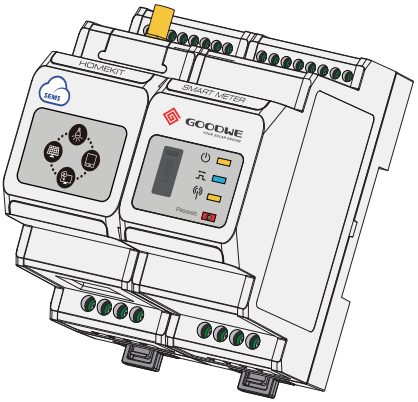

No. 90 Zijin Rd., New District, Suzhou, 215011, China
service@goodwe.com | www.goodwe.com

01 INTRODUCTION

This product has the advantages of high precision, small dimensions,convenient operation and installation. It is equipped with Single-Phase Meter and Two-Channel External CT to measure and calculate the Power and Energy at the Inverter Output Point, Grid Point and Household Load Point, and upload the measurement and calculation datas to the server in real time over Wi-Fi or an ethernet cable, to realize the measurement, statistics, analysis andmanagement of electric energy at different loads with the SEMS and APP system of GoodWe. (See the following link for more detail instructions of SEMS and APP :www.semsportal.com/)

PACKING LIST

1*HomeKit	1*USB Seal
2*CT(Current Transformer)	1*Short Wiring
1*Screw Driver	4*Cable Connection Terminal
1*Wi-Fi Antenna	1*User Manual
1*HomeKit Network Quick Configuration Guide	

02 OVERVIEW

2.1 HOMEKIT OVERVIEW

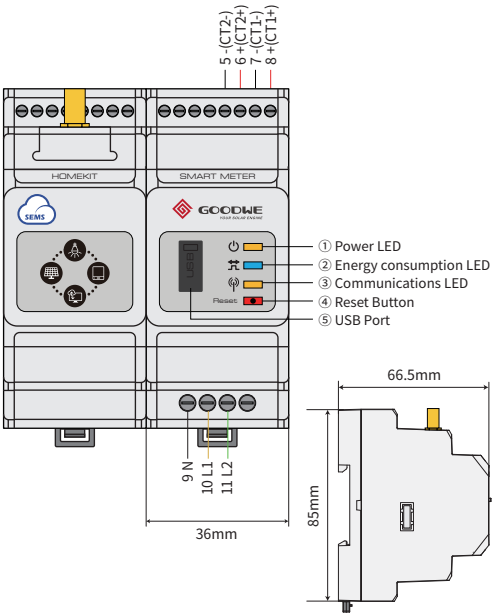

2.2 CT OVERVIEW

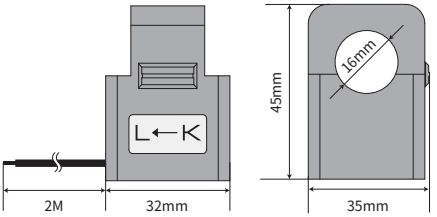

03 INSTALLATION INSTRUCITON

3.1 INSTALLATION ENVIROMENT

Protection Class: IP20(for indoor use)

Operating Temperature: -25°C~60°C

3.2 INSTALLATION (WITH DIN TRACK)

① Pull to release the retaining clip

② Mount the HomeKit on the track and push the retaining clip up(a click sound indicates it is installed well)

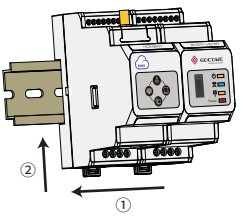

3.3 WIRING CONNECTION

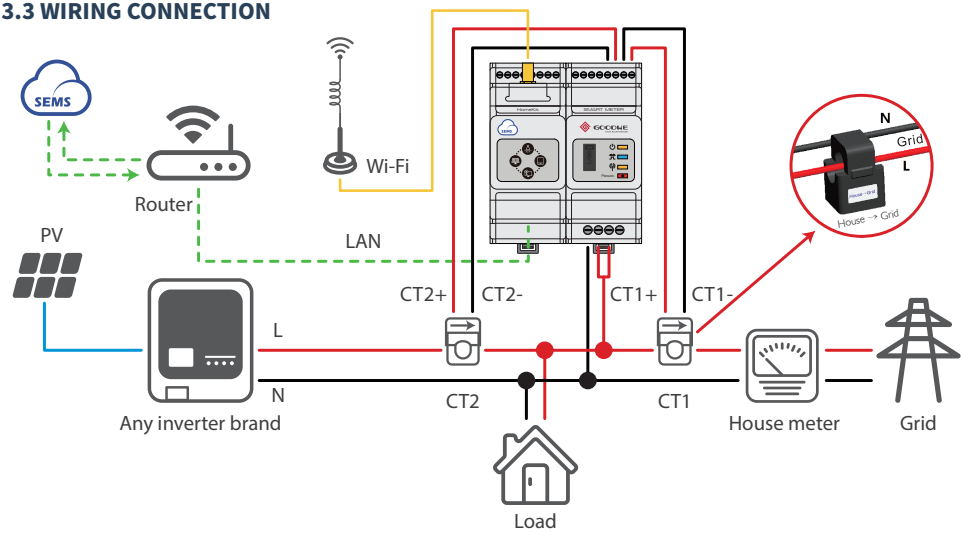

* Please note the CT location: CT1 is connected to the Grid Point, while CT2 is connected to the Inverter Output Point, and the arrow direction on the CT is pointed to the Grid from the Inverter side. The connection wires of CT are RED corresponding to '+' and BLACK corresponding to '-'.
* HomeKit is only suitable for Single-Phase grid application. Please short connect L1 and L2 in HomeKit side (see the wiring diagram), otherwise it may cause measurement error.

04 ELECTRICAL DATA

MODEL		HK1000
APPLICATION		Household Loads Mornitoring
Voltage Current	Voltage Range	100Vac~240 Vac
	Frequency	50Hz / 60Hz
	Nominal Current	CT in:120A / 40mA
	Current Range	0.48A-120A
Self-Consumption		<5W
Data Detection		Active Power / Reactive Power / Power Factor / Frequency
Energy Calculation		Active/Reactive Power Energy
Precision	Voltage/ Current	Class 1
	Active Power	Class 1
	Reactive Power	Class 2
Communication		Wi-Fi or LAN

05 INTERFACE

5.1 INDICATIONS

- **Power LED:**

  Normal status: ON
- **Energy Consumption LED:**

  Importing:ON

  Exporting:Blinking
- **Communicating LED:**

  Trying to conncet Router: Blinking 2 times

  Trying to connect Sever: Blinking 4 times

  Transmitting data: ON

  Fail to transmit any data: OFF

5.2 RESET BUTTON

Press	Function
1-3s	Restore Communication Module of HomeKit to factory Settings
5-10s	Restore Meter of HomeKit to factory Settings
>15s	Restore Meter of HomeKit to factory Settings and clear energy data

5.3 USB PORT

For after-sales maintenance.