Hybrid inverter

358-S010005-04

FelicityESS™

USER GUIDE

T-REX-50KHP3G01

T-REX-40KHP3G01

T-REX-30KHP3G01

T-REX-29K9HP3G01

T-REX-25KHP3G01

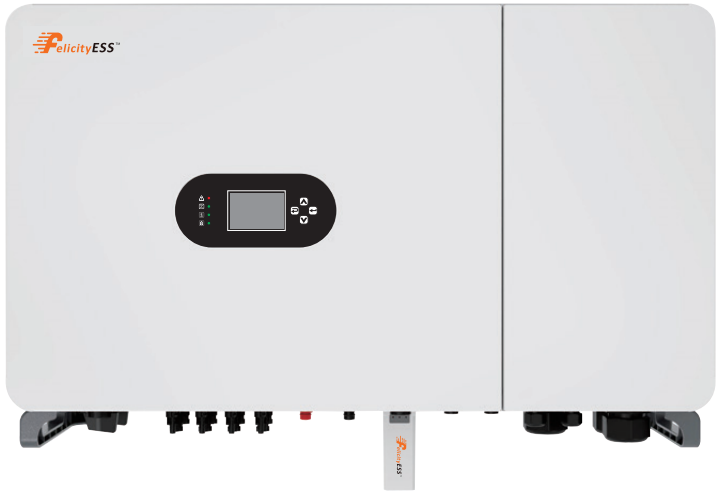

Contents

1. Safety Introductions.....1
2. Product Introduction 2
2.1 Product Features 3
2.2 Basic System Architecture 3
2.3 Products overview 4
2.4 Poduct handling requirements.....5
3. Installation 5
3.1 Packing List.....5
3.2 Installation tools 7
3.3 Installation Environment 8
3.4 Mounting 9
3.5 Function port definition. 11
4. Electrical Connection.....12
4.1 PV Connection 12
4.2 Battery Connection..... 15
4.3 Grid, Load and Gen port connection 16
4.4 Earth Connection(mandatory) 20
4.5 Smart Meter & CT Connection 20
4.6 DRMS Connection 27
4.7 Lithium Battery Communication 28
4.8 Installation of WIFI module 31
4.9 APP Download the app 31
4.10 Wiring diagram with neutralline grounded 32
4.11 Wiring diagram with neutralline ungrounded..... 33
4.12 Typical application diagram of grid power..... 34
4.13 Three phase parallel connection diagram..... 37
4.14 Typical application diagram of diesel generotor.....38

Hybrid inverter

5.Display and operation 39
5.1 Inverter Startup and Commissioning.....39
5.2 Operation ang Display Panel.....40
5.3 LCD Display Icons.....40
5.4 Solar Power Curve..... 41
5.5 Basic Setup Menu..... 42
5.6 Battery Setting.....43
5.7 System Work Mode.....45
5.8 Grid Setting.....48
5.9 Generator Setting.....52
5.10 Advanced Function.....54
6. Work Mode 55
7. Warranty..... 59
8.Troubleshooting 59
9. Warning Code.....60
10. Fault Code.....60
Appendix I.....64
Appendix II 66

About This Manual

The manual mainly describes the product information, guidelines for installation, operation and maintenance. The manual cannot include complete information about the photovoltaic (PV) system.

How to Use This Manual

Read the manual and other related documents before performing any operation on the inverter. Documents must be stored carefully and be available at all times.
Contents may be periodically updated or revised due to product development. The information in this manual is subject to change without notice. The latest manual can be acquired via our website at **https://www.felicitysolar.com** for latest version.

1. Safety Introductions

This chapter contains important safety and operating instructions. Read and keep this manual for future reference.

- Before using the inverter, please read the instructions and warning signs of the battery and corresponding sections in the instruction manual.
- Do not disassemble the inverter. If you need maintenance or repair, take it to a professional service center.
- Improper reassembly may result in electric shock or fire.
- To reduce risk of electric shock, disconnect all wires before attempting any maintenance or cleaning. Turning off the unit will not reduce this risk.
- Caution: Only qualified personnel can install this device with battery.
- Never charge a frozen battery.
- For optimum operation of this inverter, please follow required specififfication to select appropriate cable size. It is very important to correctly operate this inverter.
- Be very cautious when working with metal tools on or around batteries. Dropping a tool may cause a spark or short circuit in batteries or other electrical parts, even cause an explosion.
- Please strictly follow installation procedure when you want to disconnect AC or DC terminals. Please refer to "Installation" section of this manual for the details.
- Grounding instructions - this inverter should be connected to a permanent grounded wiring system. Be sure to comply with local requirements and regulation to install this inverter.
- Never cause AC output and DC input short circuited. Do not connect to the mains when DC input short circuits.

The Symbols used in this manual are listed as below:

Symbols	Name	Instruction
	Danger	Serious physical injury or even death may occur if not follow the relative requirements
	Warning	Physical injury or damage to the devices may occur if not follow the relative requirements
	Electrostatic sensitive	Damage may occur if not follow the relative requirements
	Hot surface	Sides of the device may become hot. Do not touch.
	Earth terminal	The inverter must be reliably grounded.
	Caution	Ensure that DC and AC side circuit breakers have been disconnected and wait at least 5 minutes before wiring and checking.
NOTE	Note	The procedures taken for ensuring proper operation.
	CE mark	The inverter complies with the CE directive.
	EU WEEE mark	Product should not be disposed as household waste.

2.Product Introduction

This is a multifunctional inverter, combining functions of inverter, solar charger and battery charger to offer uninterruptible power support with portable size. Its comprehensive LCD display offers user configurable and easy accessible button operation such as battery charging, AC/solar charging, and acceptable input voltage based on different applications.

2.1 Product Features

- 230V/400V Three phase Pure sine wave inverter.
- Self-consumption and feed-in to the grid.
- Auto restart while AC is recovering.
- Programmable supply priority for battery or grid.
- Programmable multiple operation modes: On grid, OFF grid and UPS.
- With limit function, prevent excess power overflow to the grid.
- Supporting WIFI monitoring and Fsolar Smart Cloud Monitoring System.
- 8-channel PV, 4-channel MPPT, 1.3 times overconfiguration capacity.
- 2 independent battery inputs, effectively reducing inter-cluster circulation.
- Wide battery voltage input, each battery charge and discharge current up to 50A.
- Programmable generator port, support smart load and microinverter access.
- The off-grid switching time is less than 10ms to prevent important loads from losing power.
- Support multi Working Mode, Time Of Use,Selling First, Zero Export To Load, Zero Export To CT.
- The maximum support is 12 parallel machines.
- IP65 protection level.

2.2 Basic System Architecture

The following illustration shows basic application of this inverter.
It also includes following devices to have a complete running system.
- Generator or Utility
- PV modules
Consult with your system integrator for other possible system architectures depending on your requirements.
This inverter can power all kinds of electrical equipment, including motor type appliances such as refrigerator and air conditioner.But it needs to be installed in non-residential areas.

Please refer to the Figure2.2-1 for details.

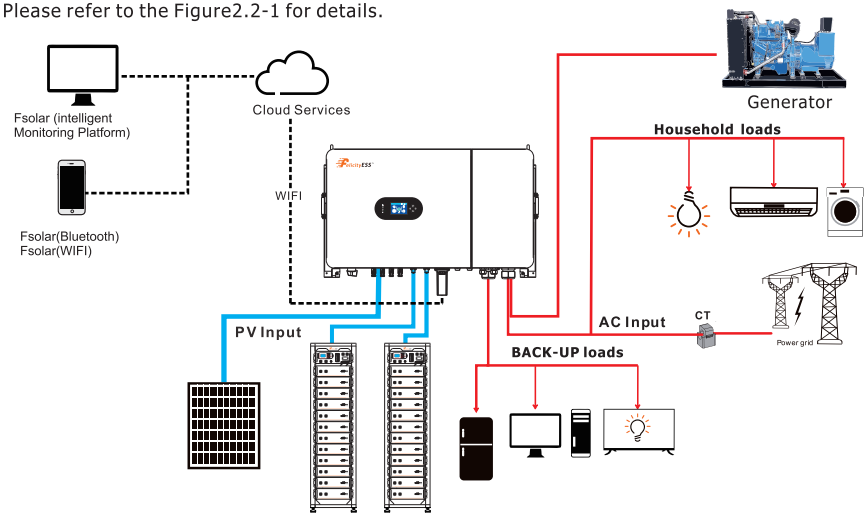

Figure 2.2-1 Block diagram of hybrid inverter system

2.3 Products overview

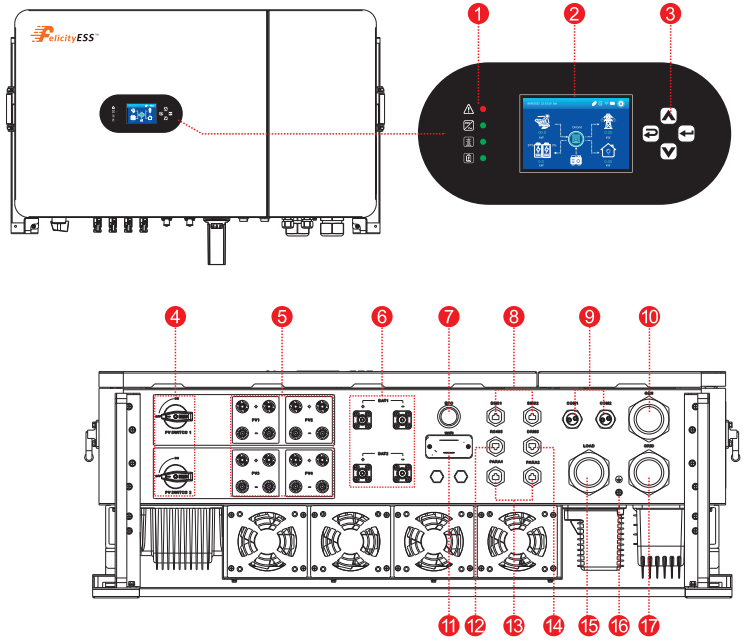

Figure 2.3-1 Products overview

1. Inverter Indicators
2. LCD Display
3. Button
4. PV Switch
5. PV input Connection Port
6. Battery Connection Port
7. EPO
8. BMS Port
9. COM Port
10. Generator Connection Port
11. WIFI Communication Port
12. RS485 Port
13. PARA Port
14. DRMs Port
15. LOAD Connection Port
16. PE Connection Port
17. GRID Connection Port

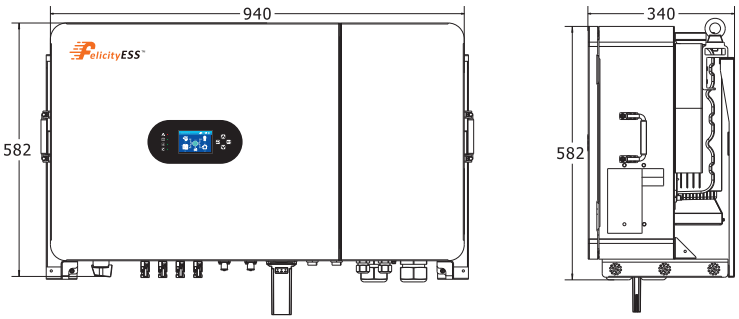

Figure 2.3-2 Inverter dimensions

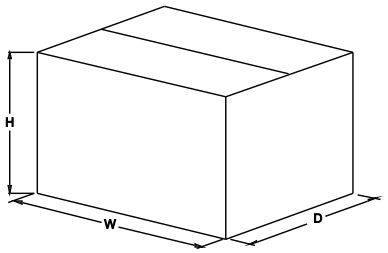

Figure 2.3-3 Paper packages dimension

Table 2-1 Packages dimension and gross weight

Model	H (mm)	W (mm)	D (mm)	Net Weight (KG)	Gross Weight (KG)
T-REX-50KHP3G01	469	1114	774	85.6	102.3

2.4 Poduct handling requirements

Lift the inverter out of the paper package and transport it to the designated installation.

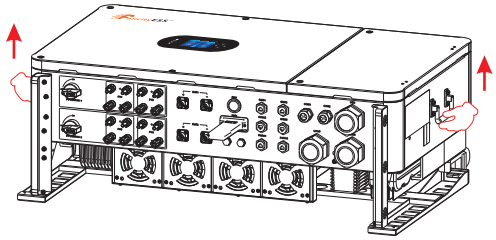

Figure 2.4-1 Lift the inverter

CAUTION:
Improper handling may cause personal injury!

- Arrange an appropriate number of personnel to carry the inverter according to its weight, and installation personnel should wear protective equipment such as anti-impact shoes and gloves.
- Placing the inverter directly on a hard ground may cause damage to its metal enclosure. Protective materials such as sponge pad or foam cushion should be placed underneath the inverter.
- Move the inverter by one or two people or by using a proper transport tool. Move the inverter by holding the handles on it. Do not move the inverter by holding the terminals.

3 Installation

3.1 Packing List

The inverter 100% strictly inspected before package and delivery. Please check the product package and fittings carefully before installation.



Figure 3.1-1 Packing list

Table 3.1-1 Detailed delivery list

NO.	Name	Description	Quantity
1	Inverter	Inverter	1
2	Battery connector	Connection ports for batteries and inverter Bat Port	2 pairs
3	User manual	User manual	1
4	Warranty Card	Warranty Card	1
5	PV connector	PV Port Connectors	8 pairs

6	WiFi module	For installing the WIFI module	1
7	COM connector	Communication Port Connector （Without short connection)	6
8	Meter	Meter(optional)	1
9	Expansion Screw	Used for securing the product's wall mount	4
10	M5 combination screw	Fixed wall mounts and inverter	2
11	M8 T-wrench	Used for internal connection of the wiring bin	1
12	M4 T-wrench	Used for cover disassembly or internal ground connection	1
13	Ring	Used to connect wall hooks	2
14	OT terminals	For external ground connection	1
15	Magnetic ring	For commuication cable of BMS and Meter(23x33x15 mm)	3
16	Magnetic ring	Magnetic ring for CT (31x29x19 mm)	3
17	Magnetic ring	Magnetic ring for AC wires(50x65x25 mm)	3
18	Solar Photovoltaic Connector Special Spanner	Photovoltaic connector installation Spanner	1
19	M3 Straight spanner	Used for communication cable connection	1
20	M6 terminal	The external AC cable terminal chassis ground connection	3
21	M10 terminal	Cold crimping terminal of the inverter load terminal	4
22	CT	Anti backflow	3
23	Parallel cable	Used for parallel wiring	2

3.2 Installation Tools

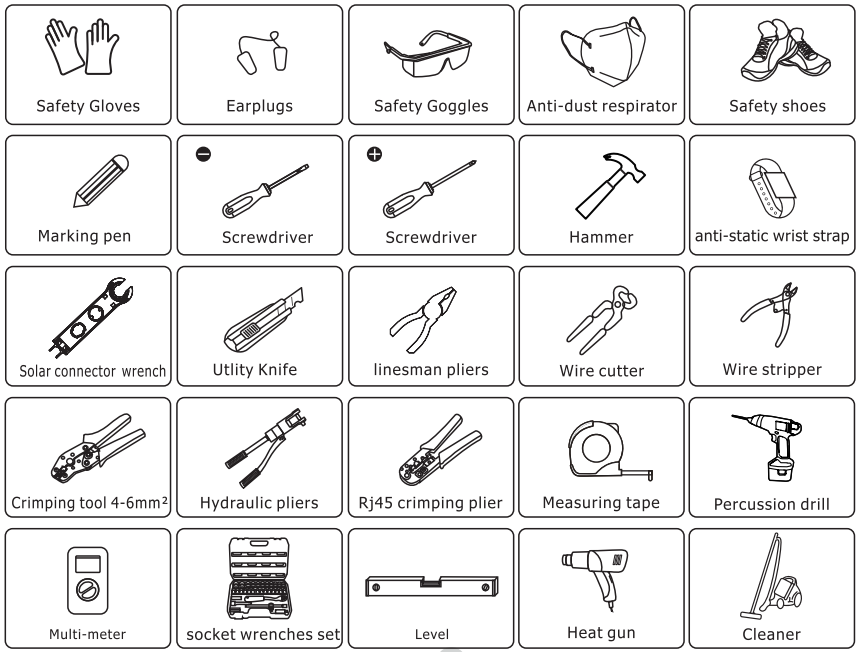

3.3 Installation Environment

This Hybrid inverter is designed for outdoor use(IP65), Please make sure the installation environment meets below conditions:

- Choose a dry, clean, and tidy place, convenient for installation
- Ambient temperature range: -40°C ~ 60°C
- Relative humidity:0~95%(non-condensed)
- Install in a well-ventilated place
- No flammable or explosive materials close to inverter
- The AC overvoltage category of inverter is category III
- Maximum altitude: 2000m

- Inverter cannot be installed near flammable, explosive or strong electro-magnetic equipment.
- Do not use impact drivers to tighten any fasteners on the inverter.

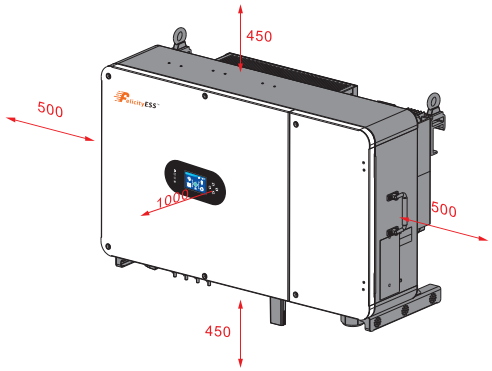

Figure 3.3-1 Installation space of one inverter

Considering the following points before selecting where to install:

- Please select a vertical wall with load-bearing capacity for installation, suitable for installation on concrete or other non-flammable surfaces, installation is shown below.
- Install this inverter at eye level in order to allow the LCD display to be read at all times.
- The ambient temperature should be between -40~60℃ to ensure optimal operation.
- Be sure to keep other objects and surfaces as shown in the diagram to guarantee sufficient heat dissipation and have enough space for removing wires.

Table 3.3-1 Detailed installation space

	Minimum clearance
Lateral	500mm
Top	450mm
Bottom	450mm

Mount the inverter in the optimal orientation as shown below.

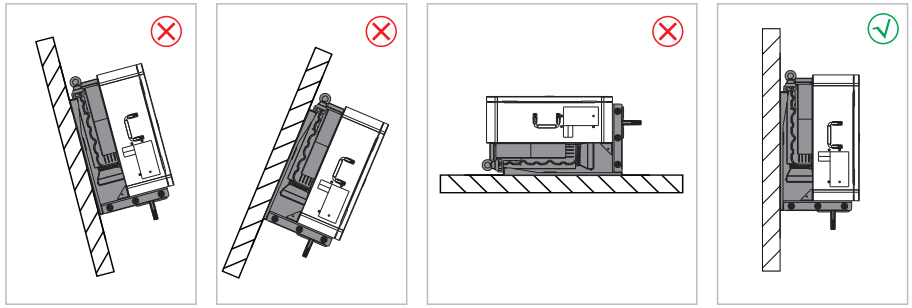

Figure 3.3-2 Installation position

•Do not open the cover of the inverter or replace any part as incomplete inverter may cause electric shock and damage the device during operation.

The installation of inverter should be protected under shelter from direct sunlight or badweather like snow,rain, lightning etc.

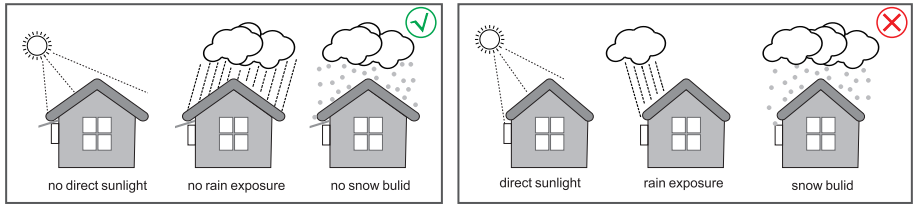

Figure 3.3-3 Installation position

3.4 Mounting

- The inverter is heavy, Please arrange an appropriate number of personnel to carry the inverter and the installer should wear impact-proof shoes, gloves and other protective equipment.
- Placing the inverter directly on hard ground may damage its metal casing. Protective materials such as sponge pads or foam pads should be placed underneath the inverter.
- Hold the handle to move the inverter,Do not hold the terminal to move the inverter.

The inverter is suitable for mounting on concrete or other non-combustible surface only.

Step 1: Please use the mounting bracket as a template to drill 4 holes in the right positions with a 14mm drill (14mm in diameter, and 62-70mm in depth). Use a proper hammer to fit the expansion bolt into the holes. Then, screw out the nuts of the expansion bolts, align the holes of the mounting bracket with the 4 expansion bolts, and then push in the mounting bracket, tighten the nuts of expansion bolts. The installation of inverter support is shown in Figure 3.4-1

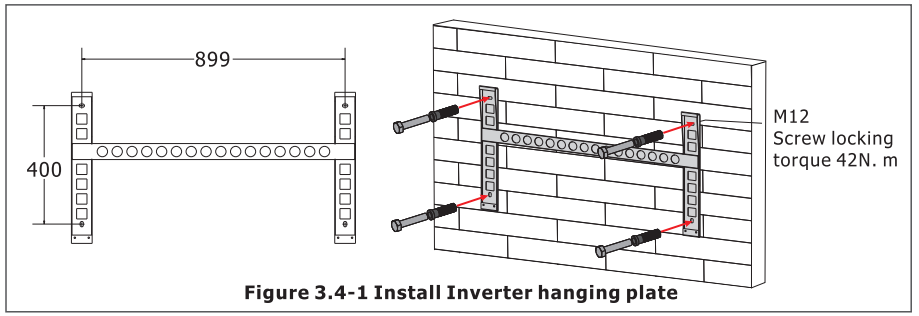

Figure 3.4-1 Install Inverter hanging plate

Step 2. Lift the inverter to suspend it on the installation bracket, We can prevent theft by locking. See Figure 3.4-2

• Remember that this inverter is heavy so users must be careful in handling the unit during installation especially when mounting or removing it from a wall.

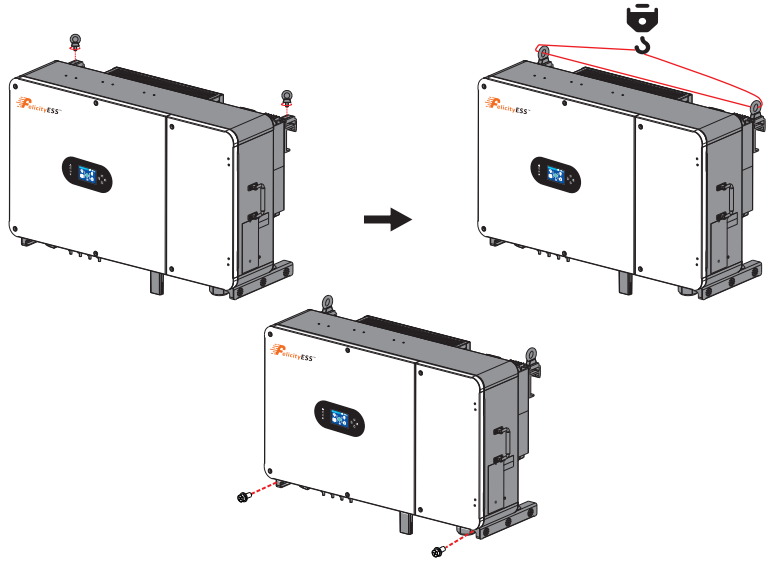

Figure 3.4-2 Installing an Inverter

Step 3: Secure the grounding wire with M5 screws to ensure the rack is grounded. See Figure 3.4-3.

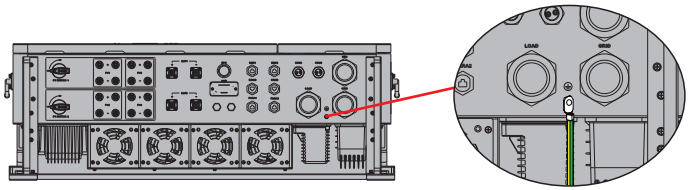

Screw locking torque 2N. m

Figure 3.4-3 Rack earth(Ground wire locked by M5)

3.5 Function Port Definition

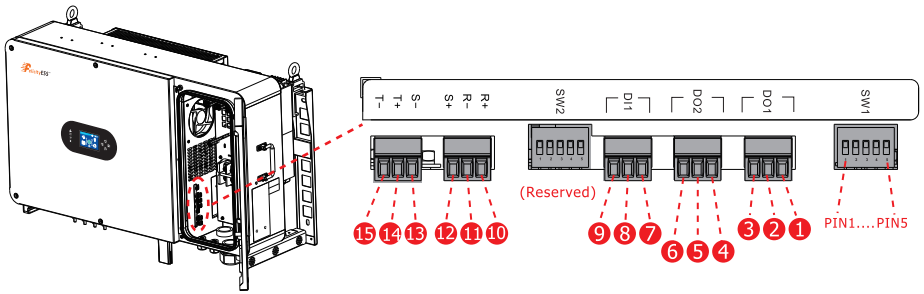

Figure 3.5-1 Function port definition

Table 3.5-1 SW1 port function definition

SW1	PIN1	PIN2	PIN3	PIN4	PIN5
Function	Parallel use	Reserved (always on)	Reserved (always on)	Reserved (always on)	Reserved (always on)

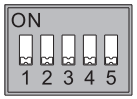

In parallel system, set the"SW1-PIN1"according to the following table.

Inv1 (master)	Inv2	Inv3	Inv4	Inv5	Inv6	Inv7	Inv8	Inv9	Inv10	Inv11	Inv12
OFF											
ON	ON										
ON	OFF	ON									
ON	OFF	OFF	ON								
ON	OFF	OFF	OFF	ON							
ON	OFF	OFF	OFF	OFF	ON						
ON	OFF	OFF	OFF	OFF	OFF	ON					
ON	OFF	OFF	OFF	OFF	OFF	OFF	ON				
ON	OFF	OFF	OFF	OFF	OFF	OFF	OFF	ON			
ON	OFF	OFF	OFF	OFF	OFF	OFF	OFF	OFF	ON		
ON	OFF	OFF	OFF	OFF	OFF	OFF	OFF	OFF	OFF	ON	
ON	OFF	OFF	OFF	OFF	OFF	OFF	OFF	OFF	OFF	OFF	ON

(1,2) G-Start: Dry contact signal for startup the diesel generator. When the "GEN signal" is active, the open contact (GS) will switch on (no voltage output).
(4,5)Dry-1: Dry contact output, When the inverter is in off-grid mode and the "signal island mode" is checked, the dry contact will switch on.
(7,8)Dry-2: Reserved
(SW2): Reserved
CT-R (10,11): current transformer (CT-R) for "Zero Export To CT" mode clamps on L1 when in three phase system. Polarity sensitive.
CT-S (12,13): current transformer (CT-S) for "Zero Export To CT" mode clamps on L2 when in three phase system. Polarity sensitive.
CT-T (14,15): current transformer (CT-T) for "Zero Export To CT" mode clamps on L3 when in three phase system. Polarity sensitive.

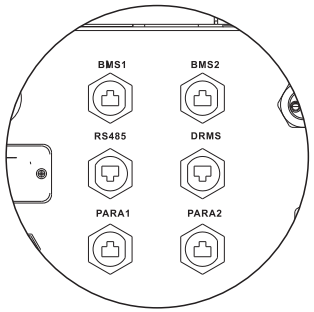

Figure 3.5-2 Communication port introduction

BMS1: BMS port for battery communication port 1.
BMS2: BMS port for battery communication port 2.
RS485: RS-485 port for Meter communication.
DRMS: Logic interface for AS/NZS 4777.2:2020.
PARA1: Parallel communication port 1.
PARA2: Parallel communication port 2. (PARA 1 and 2 are same and have no particular orders)

4. Electrical Connection

4.1 PV Connection

Before connecting PV panels/strings , please make sure requirements are followed as below:
1. Install a separately DC circuit breaker between inverter and PV modules.
2. The total short-circuit current of PV string must not exceed inverter's Max DC Current.
3. The minimum isolation resistance to ground of the PV string must exceed 33.33kΩ in case of any shock hazard.
4. PV string should not connect to earth/grounding conductor.
5. Use the right PV plugs in the accessory box.

- To avoid any malfunctions, do not connect PV modules that may have leakage current to the inverter.
- It is recommended to use a PV junction box with surge protection. Otherwise, when a lightning strike occurs in the PV module, damage may be caused to the inverter.

4.1.1 PV Module Selection

When selecting proper PV modules, please be sure to consider below parameters:
1. Open circuit Voltage (Voc) of PV modules can not exceed Max.PV Input Voltage of inverter.
2. Open circuit Voltage (Voc) of PV modules should be higher than Min.PV Input Voltage of inverter.
3. The PV modules used to connected to this inverter shall be ClassA rating certified according to IEC61730.

Table 4.1-1

Inverter Model	T-REX -50KHP3G01	T-REX -40KHP3G01	T-REX -30KHP3G01	T-REX -29K9HP3G01	T-REX -25KHP3G01
PV input Voltage	600V(150V~1000V)				
MPPT Range	200V~800V				
No. of MPP Trackers	4		3		2
No. of Strings MPP Tracker	2		2		2

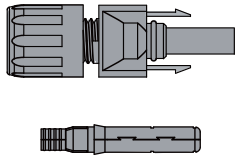

Figure 4.1-1 DC+ male connector

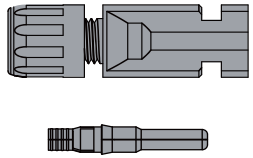

Figure 4.1-2 DC- female connector

- High voltages in power conversion circuits. Lethal hazard of electric shock or serious burns.
- All work on the PV modules, inverters, and battery systems must be carried out by qualified personnel only.
- Wear rubber gloves and protective clothing (protective glasses and boots) when working on high voltage/high current systems such as INVERTER and battery systems.

4.1.2 PV Module Wire Connection

1. Switch the Grid Supply Main Switch(AC)OFF.
2. Switch the DC Isolator OFF.
3. Assemble PV input connector to the inverter.

- Before connection, please make sure the polarity of PV array matches the "DC+" and "DC-" symbols
- Before connecting to inverter, please make sure the open circuit voltage of PV strings haven't exceeded the Max.PV Input Voltage of the inverter.
- Please use approved DC cable for PV system.

To reduce the risk of injury, please use the proper recommended cable size as below.

Table 4.1-2 Detailed wire size

Inverter Model	Wire Size	Cable(mm²)
T-REX-25KHP3G01 T-REX-29K9HP3G01 T-REX-30KHP3G01 T-REX-40KHP3G01 T-REX-50KHP3G01	10~12AWG	4mm²(10AWG)

The steps to assemble the PV connectors are listed as follows:

Setp 1. Strip the insulation of the PV wire by 7mm,disassemble the cap nut of the connetctor, thread one PV wire through the cap nut of the connector. Repeat this operation with all the PV wires, paying special attention to the polarity of the connector,as shown in Figure 4.1-3.

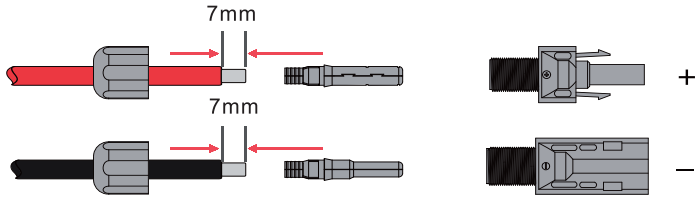

Figure 4.1-3 PV cables and PV plugs

Setp 2. Crimping metal terminals with crimping pliers,as shown in Figure 4.1-4.

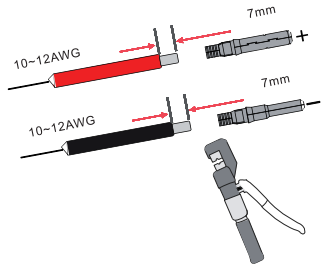

Figure 4.1-4 Crimp the terminal to the wire

Setp3. Insert the contact pin to the top part of the connector and completely tighten the cap nut to the top part of the connector,as shown in Figure 4.1-5.

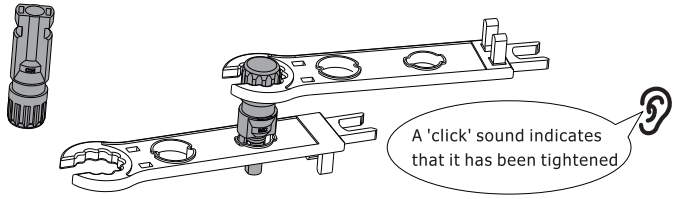

Figure 4.1-5 Connector with cap nut screwed on

Step4. Screw the cap on and plug it onto inverter side. There will be a click sound if connectors are inserted correctly into PV plugs,as shown in Figure 4.1-6.

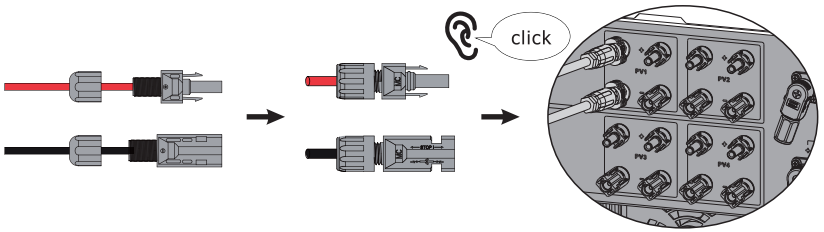

Figure 4.1-6 The PV plug is connected to the inverter

Caution:
Sunlight hits the panels to create voltage, and high voltages in series can be life-threatening. Therefore, before connecting the DC input line, it is necessary to shield the solar panel with opaque material and put the DC switch in the "OFF" state, otherwise, the high voltage of the inverter may lead to a life-threatening situation.

Warning:
Please do not turn off the DC isolator in the presence of high voltage or current. Please use its own DC power connector from the inverter accessories. Do not interconnect the connectors of different manufacturers.Max. DC Input Current should be 20A. if exceeds, it may damage the inverter and it is not covered by felicityess warranty.

4.2 Battery Connection

For safe operation and compliance, a separate DC over-current protector or disconnect device is required between the battery and the inverter. In certain applications, a disconnect switch may not be necessary, but it is always essential to have DC overcurrent protection in place. Refer to the typical amperage in the **page 34**(Typical application diagram of grid power) for the required fuse or circuit breaker size.

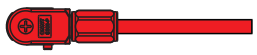

Figure 4.2-1 BAT+ plug connector



Figure 4.2-2 BAT– plug connector

Safety Hint:
• Please use approved DC cable for battery system.

Table 4.2-1 Battery cable wire size

Inverter Model	Wire Size	Cable(mm²)
T-REX-25KHP3G01 T-REX-29K9HP3G01 T-REX-30KHP3G01 T-REX-40KHP3G01 T-REX-50KHP3G01	4AWG	16mm²(4AWG)

The steps to assemble the battery plug connectors are listed as follows:
Step1: Pass the cable through the terminal, as shown in Figure 4.2-3.

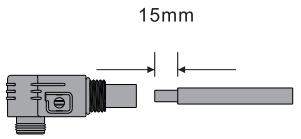

Figure 4.2-3 Pass the cable through the terminal

Step2: Put on the rubber ring, as shown in Figure 4.2-4.

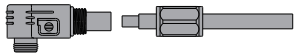

Figure 4.2-4 Put on the rubber ring

Step3: Crimp the metal terminal, as shown in Figure 4.2-5.

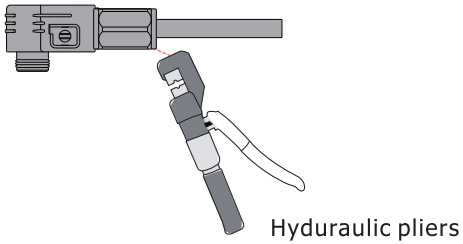

Figure 4.2-5 Crimp the metal terminal

Step 4. Connect the battery terminal to the inverter. Ensure that the battery polarity is connected correctly, as shown in Figure 4.2-6.

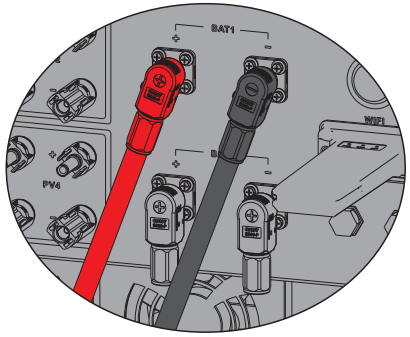

Figure 4.2-6 The battery terminal is connected to the inverter

4.3 Grid, Load and Gen Port Connection

Before connecting to the grid, a separate AC breaker must be installed between the inverter and the grid, and also between the backup load and the inverter. This will ensure the inverter can be securely disconnected during maintenance and fully protected from over current. Check the recommended values in the following tables according to local regulations in each country. The recommended specifications for AC breakers here are based on the Max.Continuous AC passthrough current of inverter, you can also choose the AC breaker of backup side according to the actual total operating current of all the backup loads.

• All wiring must be performed by a qualified personnel.It is very important for system safety and efficient operation to use appropriate cable for AC input connection. To reduce risk of injury, please use the proper recommended cable as below.

AC Breaker for Backup Load

Table 4.3-1 Recommended AC breaker for backup load

Inverter Model	Recommended AC breaker
T-REX-25KHP3G01 T-REX-29K9HP3G01 T-REX-30KHP3G01 T-REX-40KHP3G01 T-REX-50KHP3G01	240A

AC Breaker for Grid

Table 4.3-2 Recommended AC breaker for grid

Inverter Model	Recommended AC breaker
T-REX-25KHP3G01 T-REX-29K9HP3G01 T-REX-30KHP3G01 T-REX-40KHP3G01 T-REX-50KHP3G01	240A

There are three terminal blocks with "Grid" "Load" and "GEN" markings. Please do not misconnect input and output connectors.

Grid	This works like a conventional grid-tied inverter. It is both an input and output connection for non-essential load and supply.
Load	Connection of essential loads such as lighting, security systems, and Internet
Gen	Generator connection

NOTE: In final installation, breaker certified according to IEC 60947-1 and IEC 60947-2 shall be installed with the equipment.
All wiring must be performed by a qualified personnel. It is very important for System safety and efficient operation to use appropriate cable for AC input connection. To reduce risk of injury, please use the proper recommended cable as below. There are two tables below, the first table recommends cable specifications based on bypass current(Max.Continuous AC passthrough), and the second table is based on Max.Three-phase Unbalanced Output Current.

Grid connection and Backup Load connection (Copper wires) (bypass)

Table 4.3-3 Grid connection and backup load connection

Inverter Model	Wire Size	Cable(mm²)	Torque value(max)
T-REX-25KHP3G01 T-REX-29K9HP3G01 T-REX-30KHP3G01 T-REX-40KHP3G01 T-REX-50KHP3G01	4/0AWG	95	28.2Nm

Grid connection and Backup Load connection (Copper wires)

Table 4.3-4 Grid connection and backup load connection (copper wires)

Inverter Model	Wire Size	Cable(mm²)	Torque value(max)
T-REX-25KHP3G01 T-REX-29K9HP3G01 T-REX-30KHP3G01	2AWG	25	12.4Nm
T-REX-40KHP3G01	0AWG	50	12.4Nm
T-REX-50KHP3G01	3/0AWG	70	16.9Nm

• Be sure that AC power source is disconnected before attempting to wire it to the unit.

Please follow below steps to implement Grid, Load and Gen port connection:

1. Before making Grid, Load and Gen port connection, be sure to turn off AC breaker or disconnector first.
2. Strip the insulation of AC wires by about 10mm, insert AC wires according to polarities indicated on the terminal block and tighten the terminals. Be sure to connect corresponding N wires and PE wires to related terminals as well.
3. Make sure all the wires are securely and completely connected.
4. Some appliances, such as air conditioners and refrigerators, may need a time delay before reconnecting them after a power outage.This delay allows the refrigerant gas to stabilize and prevents potential damage. Check if your appliance has a built-in time-delay function before connecting it to our inverter. Examples of appliances that may require a delay include:
   - Air conditioners: Balancing refrigerant gas.
   - Refrigerators: Stabilizing the compressor.
   - Freezers: Allowing the cooling system to balance.
   - Heat pumps: Protecting against power fluctuations.

This inverter will protect your appliances by triggering an overload fault if no time delay is present. However, internal damage may still occur. Refer to the manufacturer's documentation for specific time-delay requirements.

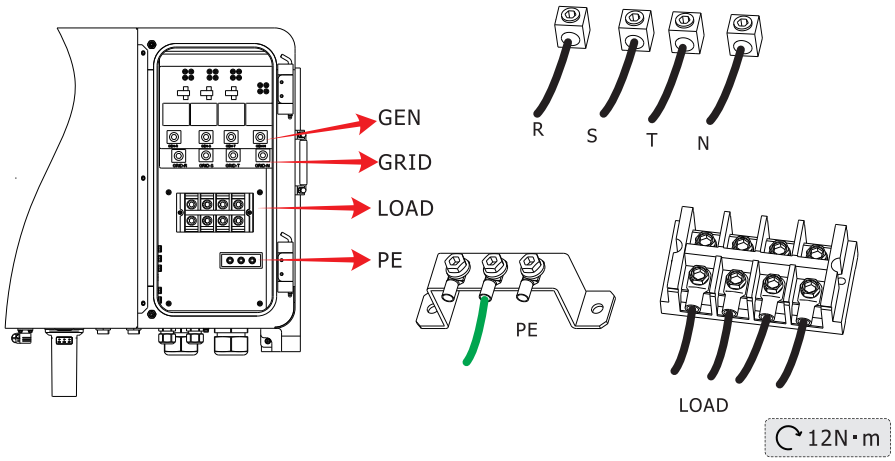

Figure 4.3-1 Gen, Grid, Load and PE port

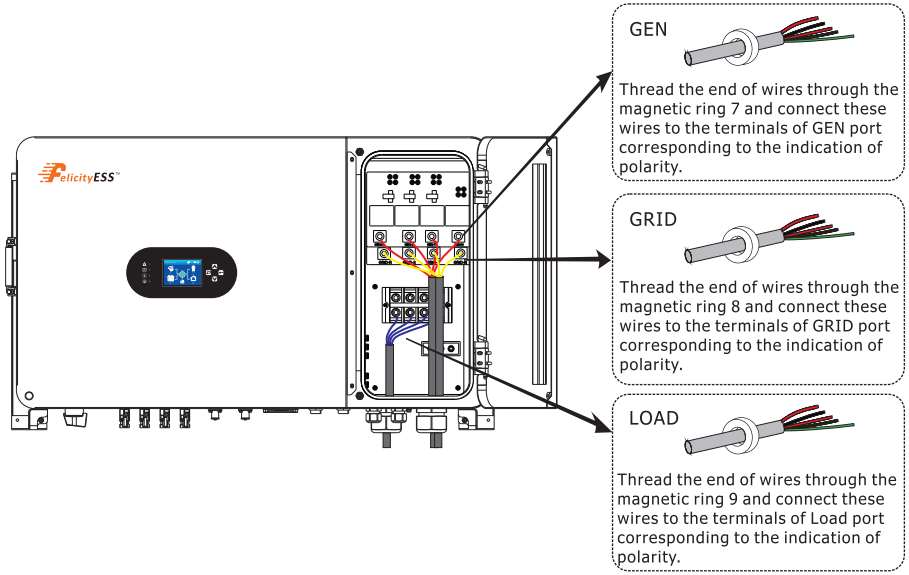

Figure 4.3-2 Grid, Load and Gen port connection with magnetic ring

4.4 Earth Connection(mandatory)

Ground cable shall be connected to ground plate on grid side, this prevents electric shock if the original protective conductor fails.

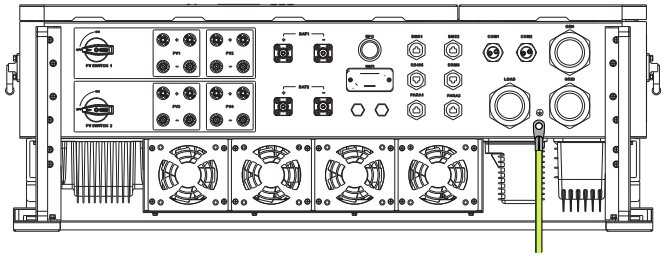

Figure 4.4-1 Earth Connection

The conductor should be made of the same metal as the phase conductors.

Earth Connection (Copper Wires)

Table 4.4-1 Detailed earth connection wire size

Wire Size	Cable(mm²)	Torque value(max)
4AWG	16	2.0Nm

Warning:
Inverter has built-in leakage current detection circuit. The type A RCD can be connected to the inverter for protection according to the local laws and regulations. If an external leakage current protection device is connected, its operating current must be equal to 10mA/KVA or higher, for this series of inverter it should be 500mA or higher, otherwise inverter may not work properly.

4.5 Smart Meter & CT Connection

There are three selectable installation methods to measure the power consumption or to ensure zero power export to grid. The default installation method is to use the CTs that come with the packaging box, When the distance between the AC distribution box and the hybrid inverter exceeds 10 meters, which means that the wire length of the CT needs to exceed 10 meters, it is recommended to use a smart meter instead of three CTs. In addition, in a parallel system, if the current to be measured is greater than 300 A, the default three CTs also need to be replaced with smart meters or larger CTs. Please contact the support team to confirm which specification of CT or smart meter to use.
In addition, in a parallel system, the CTs or smart meter should be connect to the Master.

4.5.1 Only CT Connection (Recommend)

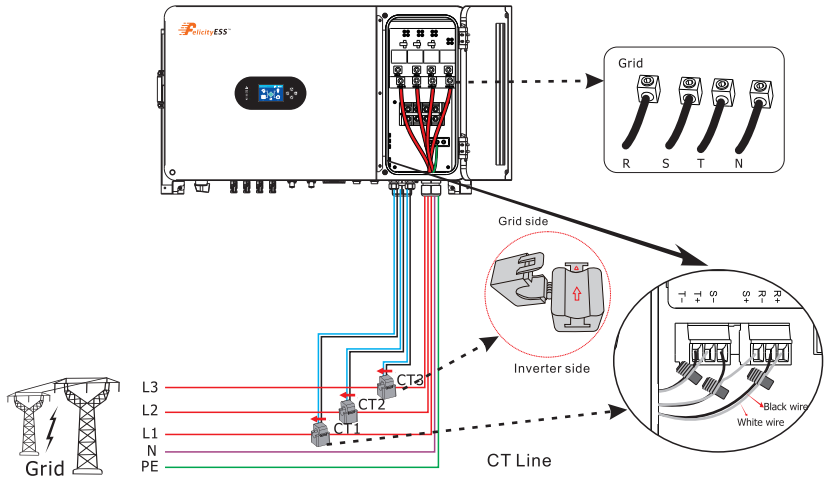

Figure 4.5-1 CT Connection

Note: CT Description

1. The default transformation ratio for CT is 3000:1
2. The default range of CT is 300A

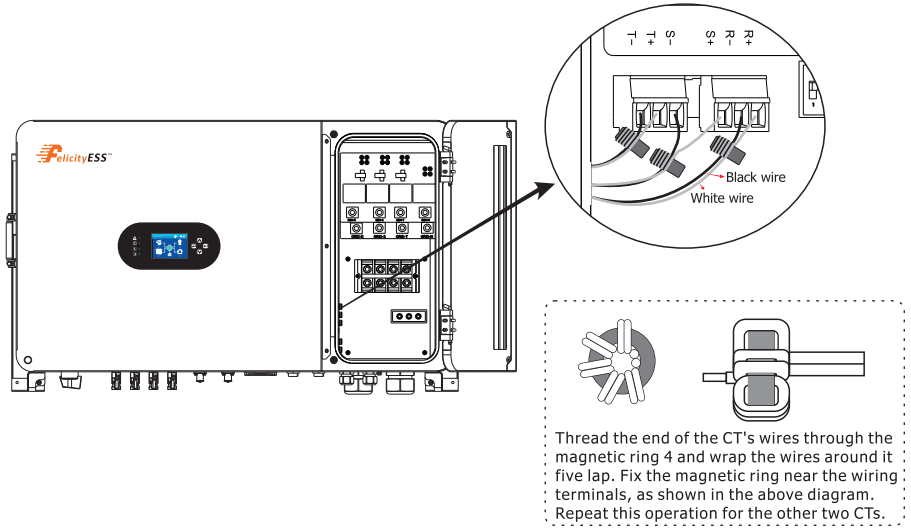

Figure 4.5-2 CT Connection with magnetic ring

4.5.2 Only Meter Connection

There are two kinds of smart meter, one is passthrough smart meter, and the other is Mutual inductance smart meter, The smart meter brands that inverters have been matched with include Acrel and Eastron, The recommended models here are not all compatible models. It is recommended to purchase smart meter from authorized distributors of FelicityESS, otherwise it may not be able to be used due communication mismatch. The definition of the "'Meter" port can be found in the Appendix part which is in the end of this user manual.

Table:4.5-1:RS485 interface

NO.	P1	P2	P3	P4	P5	P6	P7	P8
Function	/	/	RS_485_B	RS_485_A	Meter_485B	Meter_485A	/	/

The Smart Meter with CT in product box is compulsory for T-REX system installation, used to detect grid voltage and current direction and magnitude, further to instruct the operationcondition of T-REX inverter via RS485 communication.See Table 4.5-1.

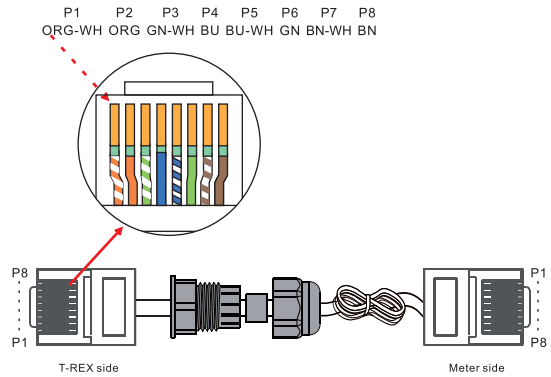

Figure 4.5-3 RS485 interface

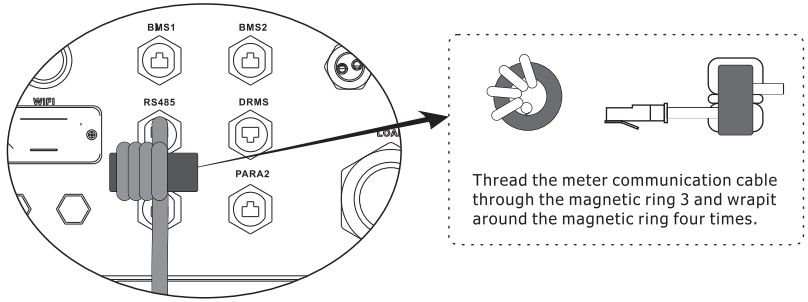

Figure 4.5-4 Meter connection with magnetic ring

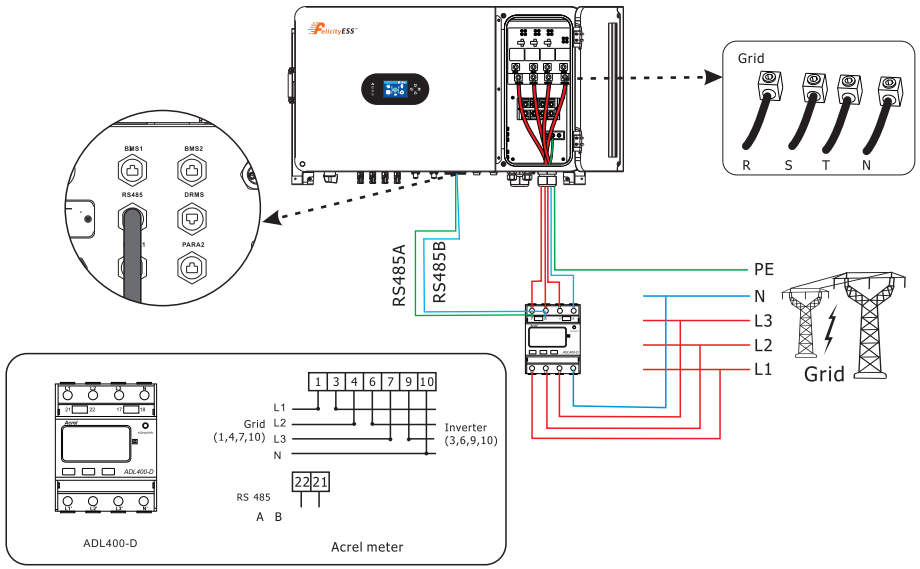

Figure 4.5-5 Meter Connection with Acrel meter

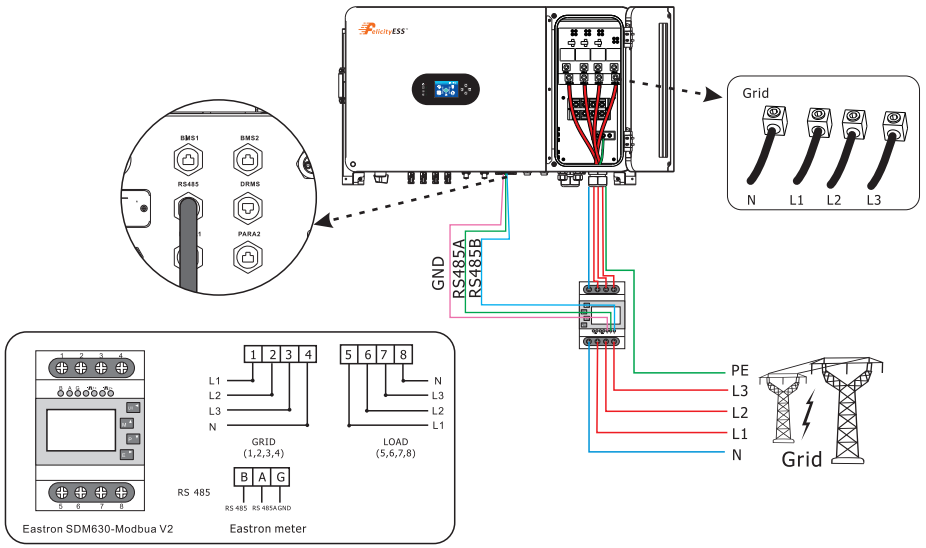

Figure 4.5-6 Meter Connection with Eastron meter

4.5.3 Meter Connection with CTs

Table:4.5-2:RS485 interface

NO.	P1	P2	P3	P4	P5	P6	P7	P8
Function	/	/	RS_485_B	RS_485_A	Meter_485B	Meter_485A	/	/

The Smart Meter with CT in product box is compulsory for T-REX system installation, used to detect grid voltage and current direction and magnitude, further to instruct the operationcondition of T-REX inverter via RS485 communication.See Table 4.5-2.

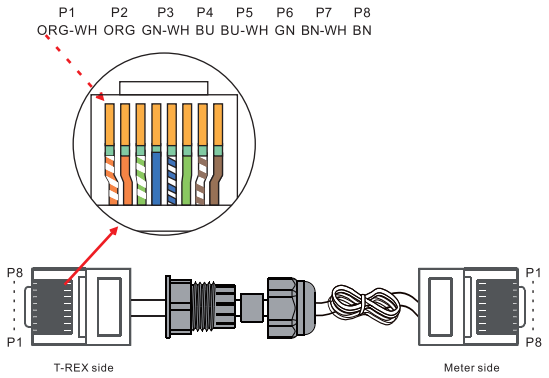

Figure 4.5-7 RS485 interface

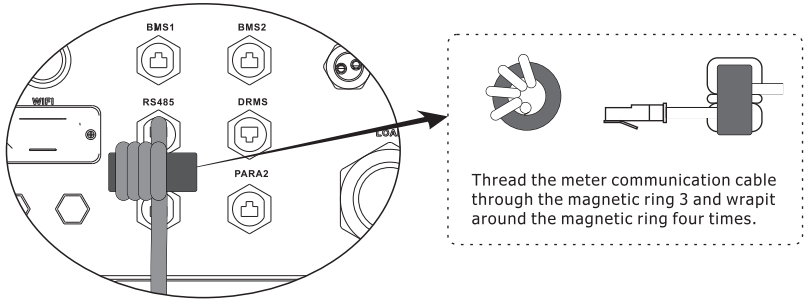

Figure 4.5-8 Meter connection with magnetic ring

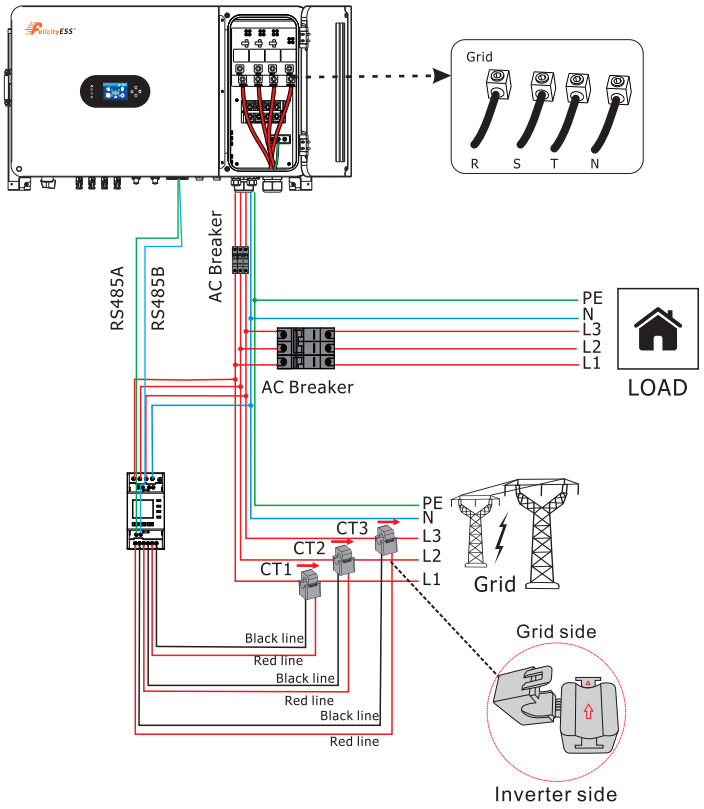

Figure 4.5-9 Smart Meter&CT Connection

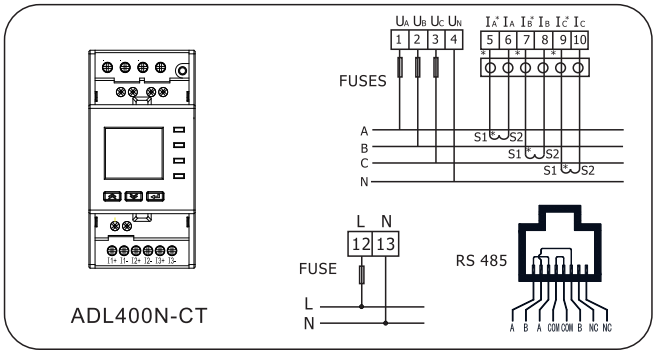

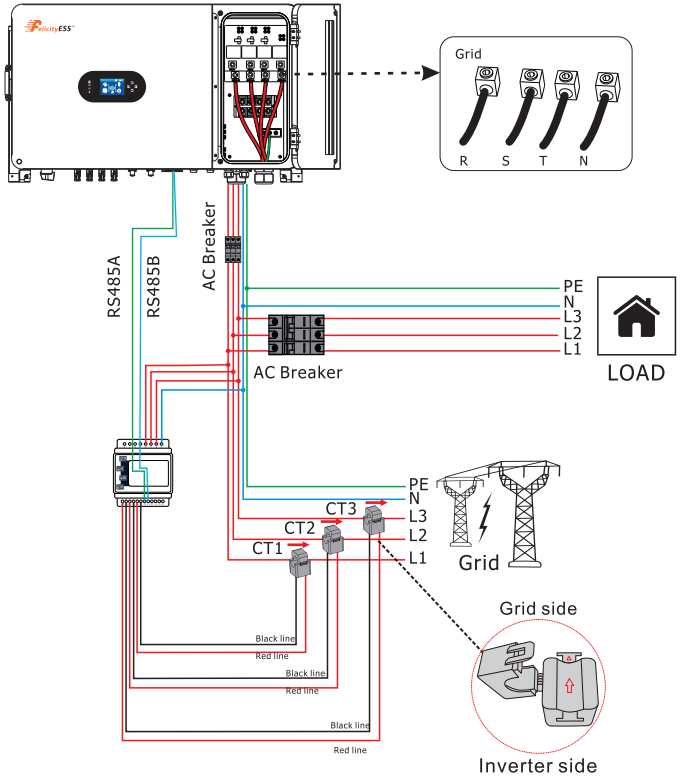

Figure 4.5-10 Smart Meter&CT Connection

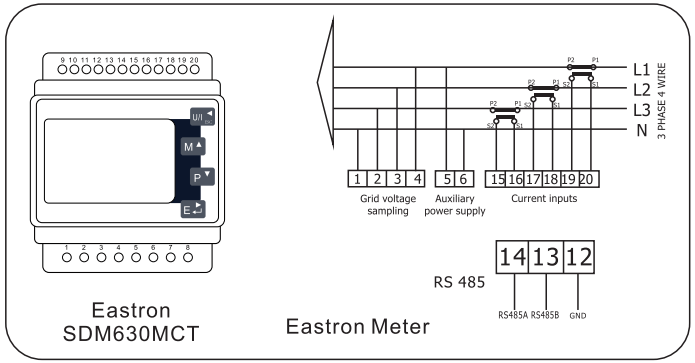

4.6 DRMS Connection

DRMS(Demand response enabling device) is used for Australia and New Zealand installation (also used as remote shutdown function in European countries), in compliance with Australia and New Zealand safety requirements(or European countries). Inverter integrates control logic and provides an interface for DRMS. The DRMS is not provided by inverter manufacturer, Detailed connection of DRMS & Remote Shutdown are shown below:

Step 1. Screw this plate off from the inverter. See Figure 4.6-1.

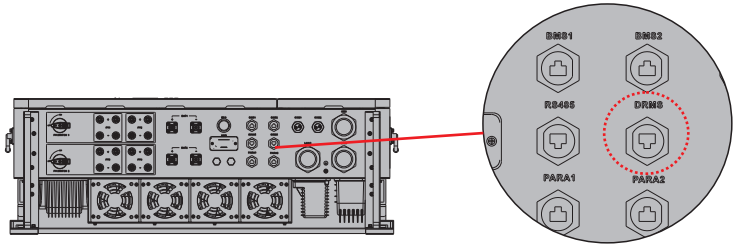

Figure 4.6-1 DRMS interface

Step 2. Plug out the RJ45 terminal and dismantle the resistor on it. Plug the resistor out, leave the RJ45 terminal for next step.

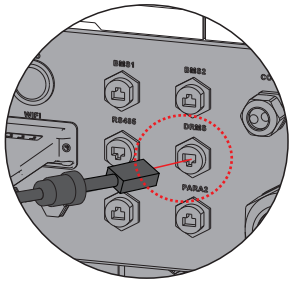

Figure 4.6-2 operating steps

The RJ45 terminal in the inverter has the same function as DRED.
Please leave it in the inverter if no external device is connected.

Step 3-1 Pass the RJ45 cable through the steel plate and connect the DRED cable to the Rj45 terminal. As shown in Figure 4.6-3, Table 4.6-1describes the 6-pin port defnition.

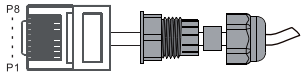

Figure 4.6-3 operating steps

Table 4.6-1 :Port pin alocation table

NO.	P1	P2	P3	P4	P5	P6	P7	P8
Function	DRM1/5	DRM2/6	DRM3/7	DRM4/8	REF	COM	/	/

Step 3-2 For Remote Shutdown. Run the cable through the steel plate , Then wire from pins 5 and 6. Table 4.6-1 describes the 6-pin port definition,Wiring is shown in Fiqure 4.6-4.

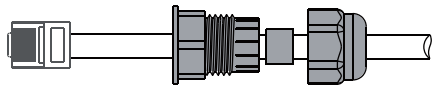

Figure 4.6-4 Remotely close the cable connection

Step 4. Connect RJ45 terminal to the right position onto the inverter.See Figure 4.6-5.

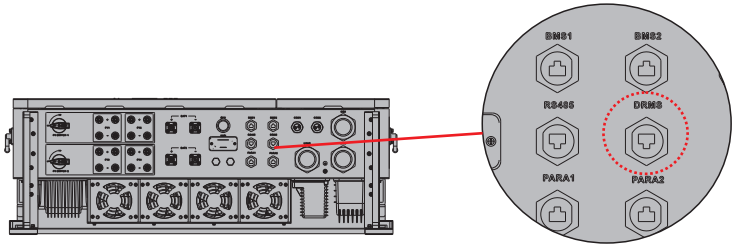

Figure 4.6-5 RJ45 interface

4.7 Lithium Battery Communication

It's allowed to connect lithium battery and build communication only which it has been configured, Please follow bellow steps to confqure communication between lithium battery and inverter.

1. Connect power cables between lithium battery and inverter, Please pay attention to the terminals of positive and negative. Make sure the positive terminal of battery is connected to the positive terminal of inverter, and the negative terminal of battery is connected to the negative terminal of inverter.
2. The communication cable is bundled with lithium battery. Both sides are RJ45 port. One port is connected to the BMS port of inverter and another one is connected to the PCS port of lithium battery.

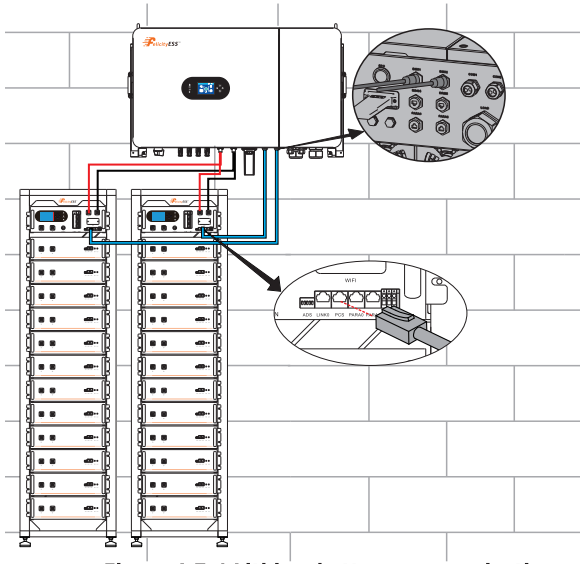

Figure 4.7-1 Lithium battery communication

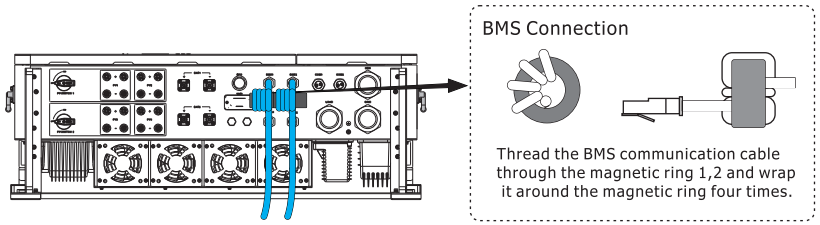

Figure 4.7-2 BMS connection

Table 4.7-1 :Detailed Pin Function Of BMS Port On T-REX

Position	Function	
1	/	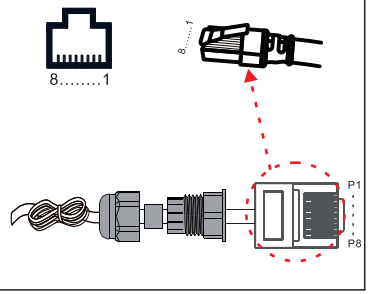
2	/	
3	/	
4	BMS/CANH	
5	BMS/CANL	
6	GND	
7	BMS/485A	
8	BMS/485B	

4.7.1 Single battery Bank communication

Configure and connect HV batteries, establishing a single communication source from a battery pack. Establish communication by connecting the communication cable to the "BMS1" port of the T-REX INVERTER.

- The "**Parallel Bat1&Bat2**" setting on the battery settings menu must be enabled, and the batteries must be connected in parallel on the DC side.
- **Parallel bat1&bat2:** When using two battery inputs from the same battery pack, acheck must be performed. After activation, the inverter will use a battery communication source.

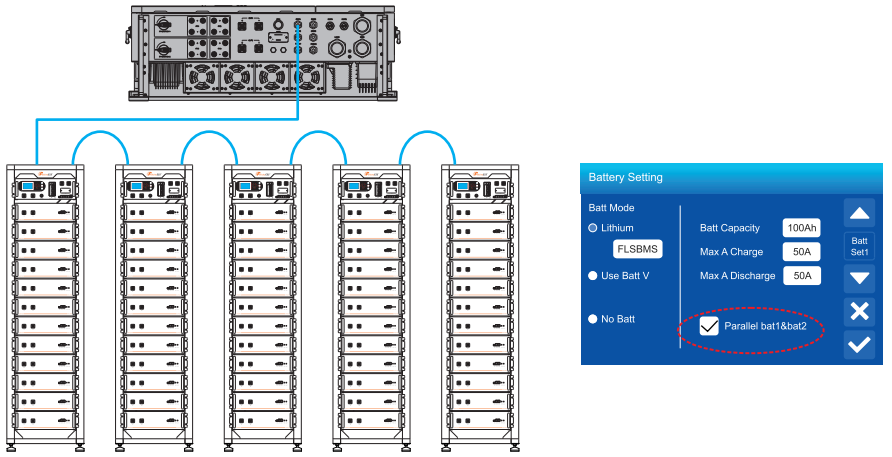

Figure 4.7-3 Single battery bank communication

4.7.2 Separate Battery Banks Communications

Configure and connect the high-voltage battery to have two battery packs, each with a separate communication source. Establish communication by connecting each communication cable to the BMS ports ("BMS1" and "BMS2") of the T-REX INVERTER.

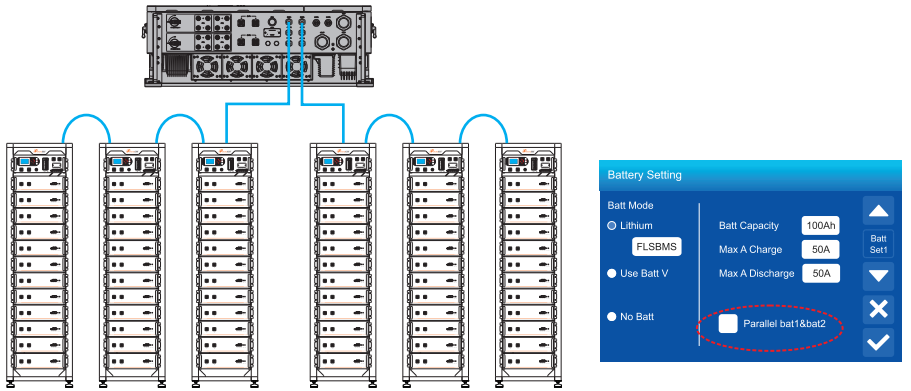

Figure 4.7-4 Separate battery banks communications

4.8 Installation of WIFI module

The WiFi communication function applies only to the WiFi module. For details, see Figure 4.8-1 installing a WiFi module.

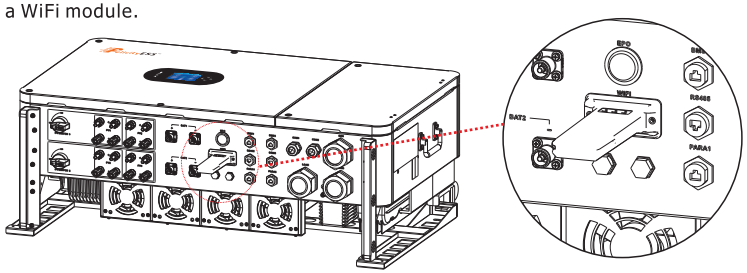

Figure 4.8-1 WiFi Module installation

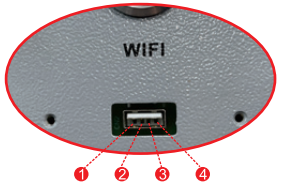

Table 4.8-1 : WiFi Module installation Table

NO.	1	2	3	4
Function	VCC	GND	WIFI-232RX	WIFI-232TX

4.9 APP Download the app

Method 1: Access https://download.felicityess.com using the mobile phone browser and download the latest installation package.
Method 2: Scan the following QR code and download the latest installation package.

Please refer the Fsolar End user manual, register the installer and create a plant and owner (skip this step if the account has been created). You can obtain the Fsolar End user manual by scanning the following QR code.

4.10 Wiring diagram with neutral line grounded

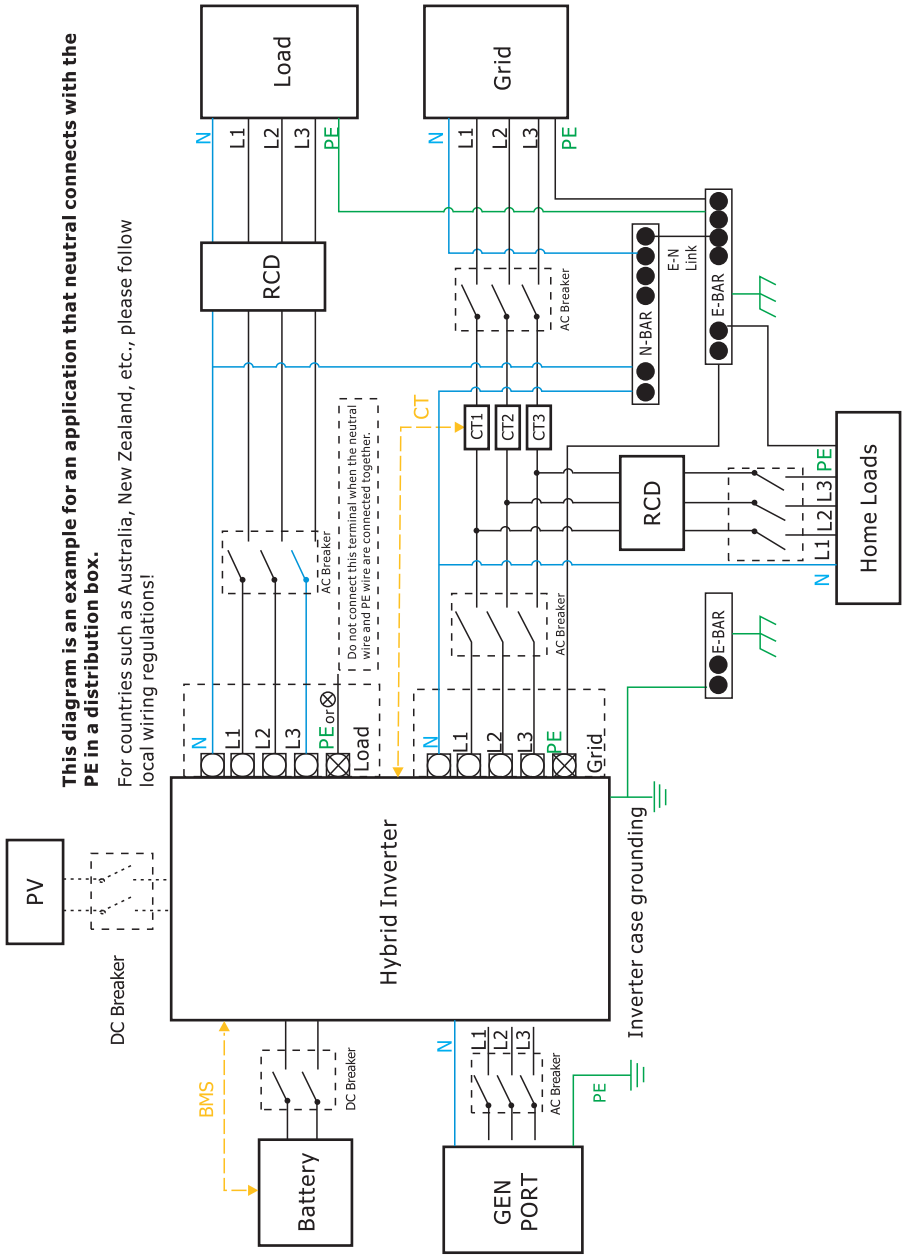

4.11 Wiring diagram with neutral line ungrounded

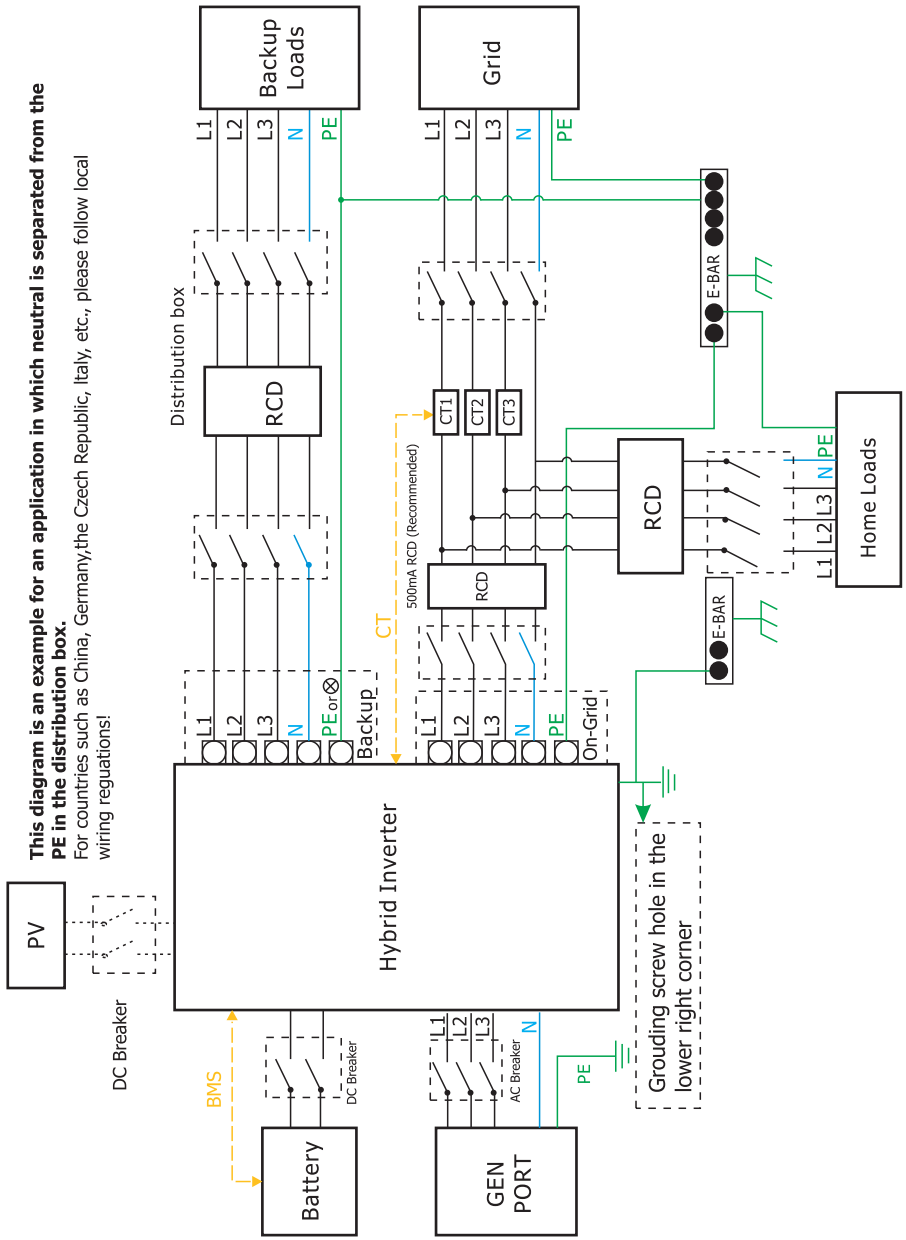

This diagram is an example for an application in which neutral is separated from the PE in the distribution box.
For countries such as China, Germany,the Czech Republic, Italy, etc., please follow local wiring regulations!

4.12 Typical application diagram of grid power

Scenario 1: If there are two high-voltage battery clusters (BAT1 and BAT2), battery cluster 1 is connected to the BAT1 port of the inverter, and the BMS communication line is connected to the BMS1 port of the inverter; Battery cluster 2 is connected to the BAT2 port of the inverter, and the BMS communication line is connected to the BMS2 port of the inverter.

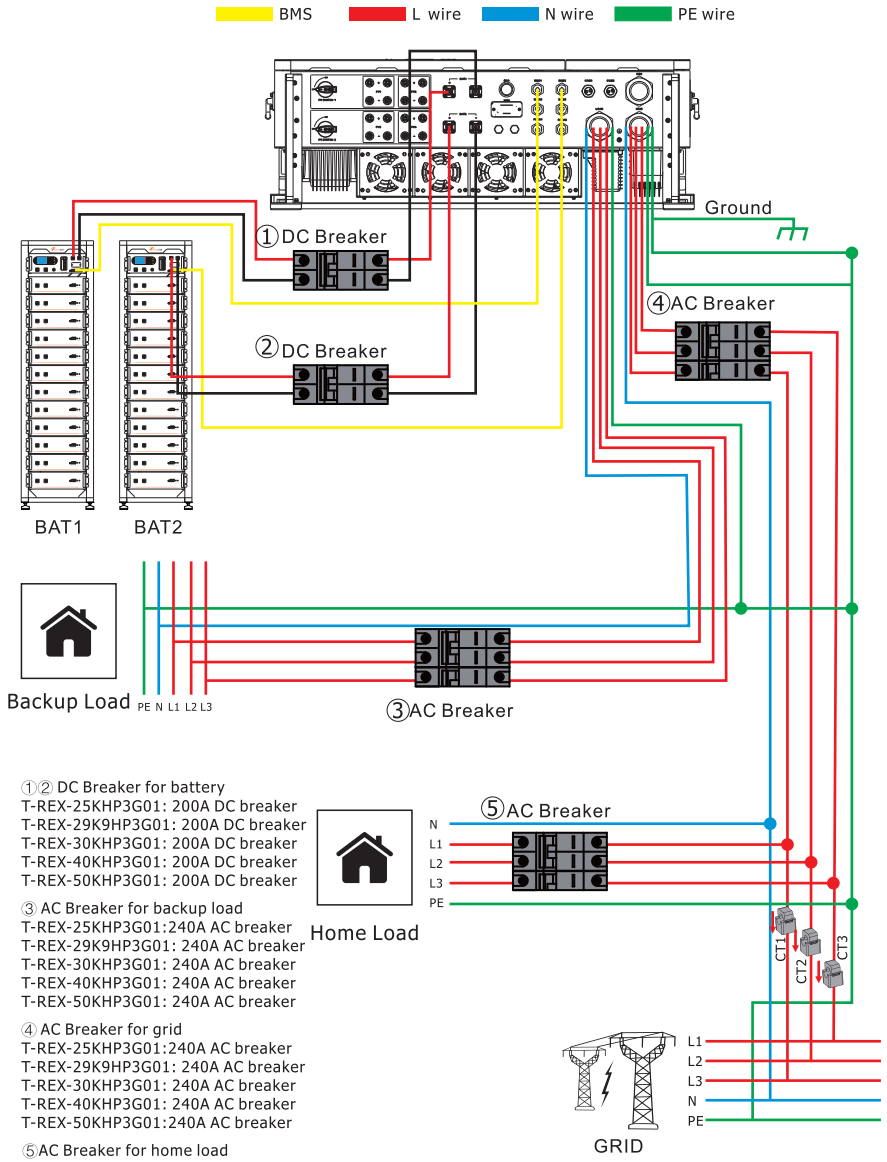

①② DC Breaker for battery
T-REX-25KHP3G01: 200A DC breaker
T-REX-29K9HP3G01: 200A DC breaker
T-REX-30KHP3G01: 200A DC breaker
T-REX-40KHP3G01: 200A DC breaker
T-REX-50KHP3G01: 200A DC breaker

③ AC Breaker for backup load
T-REX-25KHP3G01:240A AC breaker
T-REX-29K9HP3G01: 240A AC breaker
T-REX-30KHP3G01: 240A AC breaker
T-REX-40KHP3G01: 240A AC breaker
T-REX-50KHP3G01: 240A AC breaker

④ AC Breaker for grid
T-REX-25KHP3G01:240A AC breaker
T-REX-29K9HP3G01: 240A AC breaker
T-REX-30KHP3G01: 240A AC breaker
T-REX-40KHP3G01: 240A AC breaker
T-REX-50KHP3G01:240A AC breaker

⑤AC Breaker for home load
Depends on household loads

Scenario 2: If there is only one high-voltage battery cluster (BAT), the battery cluster is connected to the BAT1 port of the inverter, and the BMS communication line is connected to the BMS1 port of the inverter; Alternatively, the battery cluster can be connected to the BAT2 port of the inverter, while the BMS communication line can be connected to the BMS2 port of the inverter.

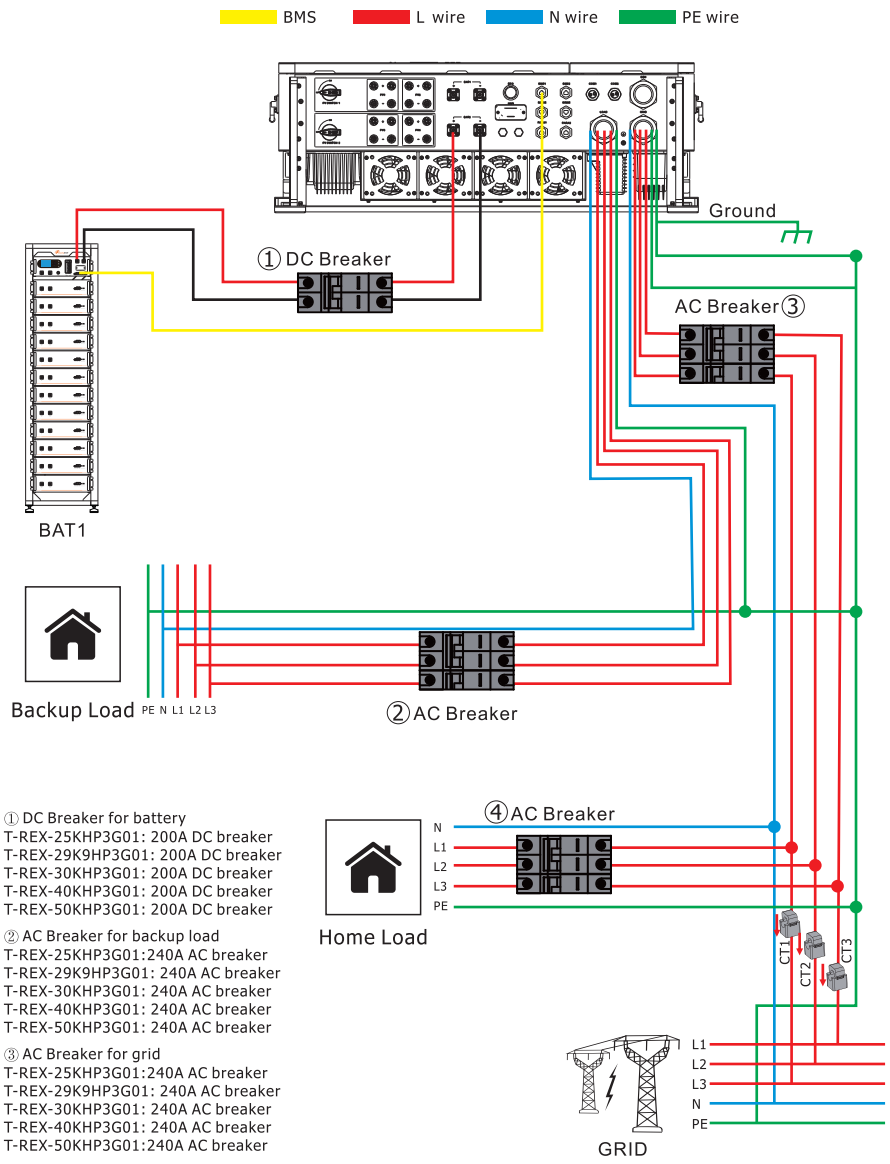

① DC Breaker for battery
T-REX-25KHP3G01: 200A DC breaker
T-REX-29K9HP3G01: 200A DC breaker
T-REX-30KHP3G01: 200A DC breaker
T-REX-40KHP3G01: 200A DC breaker
T-REX-50KHP3G01: 200A DC breaker

② AC Breaker for backup load
T-REX-25KHP3G01:240A AC breaker
T-REX-29K9HP3G01: 240A AC breaker
T-REX-30KHP3G01: 240A AC breaker
T-REX-40KHP3G01: 240A AC breaker
T-REX-50KHP3G01: 240A AC breaker

③ AC Breaker for grid
T-REX-25KHP3G01:240A AC breaker
T-REX-29K9HP3G01: 240A AC breaker
T-REX-30KHP3G01: 240A AC breaker
T-REX-40KHP3G01: 240A AC breaker
T-REX-50KHP3G01:240A AC breaker

④AC Breaker for home load
Depends on household loads

Scenario 3: If there is only one high-voltage battery cluster (BAT), the battery output can be connected to both BAT1 and BAT2 interfaces, and the BMS communication line must be connected to the BMS1 port of the inverter. Additionally, it is necessary to set "Parallel bat1 & bat2" in on the

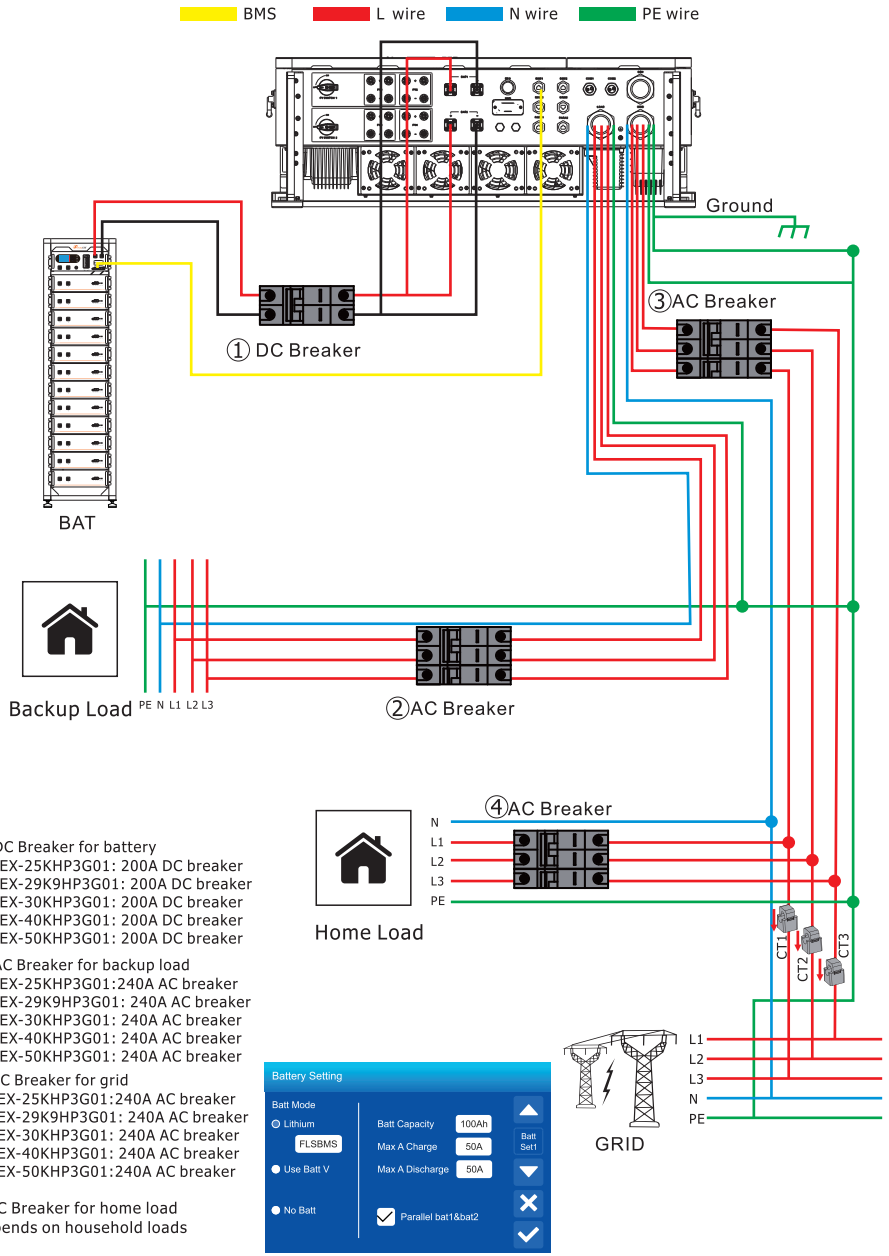

① DC Breaker for battery
T-REX-25KHP3G01: 200A DC breaker
T-REX-29K9HP3G01: 200A DC breaker
T-REX-30KHP3G01: 200A DC breaker
T-REX-40KHP3G01: 200A DC breaker
T-REX-50KHP3G01: 200A DC breaker

② AC Breaker for backup load
T-REX-25KHP3G01:240A AC breaker
T-REX-29K9HP3G01: 240A AC breaker
T-REX-30KHP3G01: 240A AC breaker
T-REX-40KHP3G01: 240A AC breaker
T-REX-50KHP3G01: 240A AC breaker

③ AC Breaker for grid
T-REX-25KHP3G01:240A AC breaker
T-REX-29K9HP3G01: 240A AC breaker
T-REX-30KHP3G01: 240A AC breaker
T-REX-40KHP3G01: 240A AC breaker
T-REX-50KHP3G01:240A AC breaker

④AC Breaker for home load
Depends on household loads

4.13 Three phase parallel connection diagram

Max. 12pcs parallel for on-grid and off-grid operation.

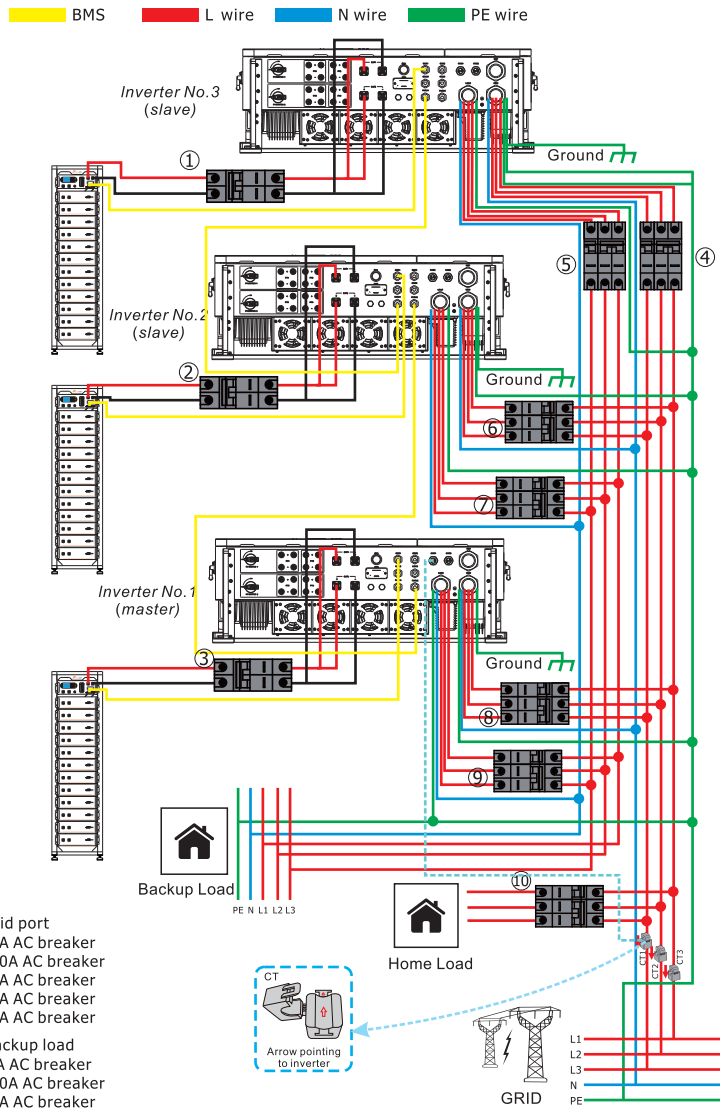

④⑥⑧ AC Breaker for grid port
T-REX-25KHP3G01: 240A AC breaker
T-REX-29K9HP3G01: 240A AC breaker
T-REX-30KHP3G01: 240A AC breaker
T-REX-40KHP3G01: 240A AC breaker
T-REX-50KHP3G01: 240A AC breaker

⑤⑦⑨ AC Breaker for backup load
T-REX-25KHP3G01:240A AC breaker
T-REX-29K9HP3G01: 240A AC breaker
T-REX-30KHP3G01: 240A AC breaker
T-REX-40KHP3G01: 240A AC breaker
T-REX-50KHP3G01: 240A AC breaker

①②③ DC Breaker for battery
T-REX-25KHP3G01:200A DC breaker
T-REX-29K9HP3G01: 200A DC breaker
T-REX-30KHP3G01: 200A DC breaker
T-REX-40KHP3G01: 200A DC breaker
T-REX-50KHP3G01:200A DC breaker

⑩AC Breaker for home load
Depends on household loads

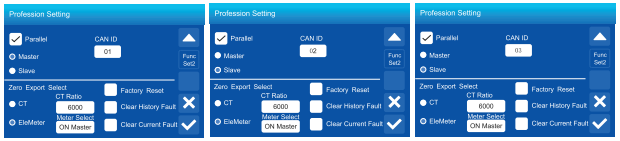

In the parallel system, the CTs or meter should be connect to the master.

4.14 Typical application diagram of diesel generotor

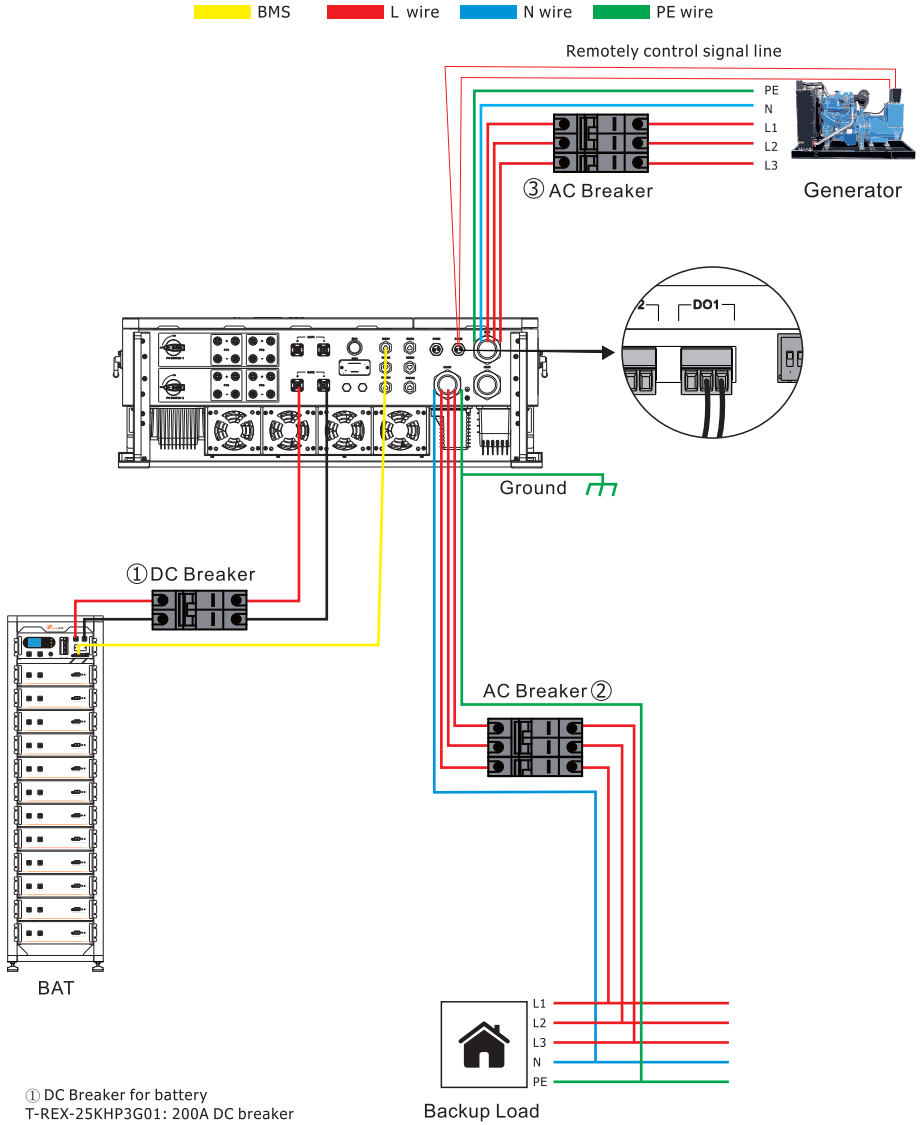

① DC Breaker for battery
T-REX-25KHP3G01: 200A DC breaker
T-REX-29K9HP3G01: 200A DC breaker
T-REX-30KHP3G01: 200A DC breaker
T-REX-40KHP3G01: 200A DC breaker
T-REX-50KHP3G01: 200A DC breaker

② AC Breaker for backup load
T-REX-25KHP3G01:240A AC breaker
T-REX-29K9HP3G01: 240A AC breaker
T-REX-30KHP3G01: 240A AC breaker
T-REX-40KHP3G01: 240A AC breaker
T-REX-50KHP3G01: 240A AC breaker

③ AC Breaker for Generator port
T-REX-25KHP3G01:240A AC breaker
T-REX-29K9HP3G01: 240A AC breaker
T-REX-30KHP3G01: 240A AC breaker
T-REX-40KHP3G01: 240A AC breaker
T-REX-50KHP3G01:240A AC breaker

5.Display and operation

This chapter describes the panel displaying and how to operate on the panel, which involves the LCD display, LED indicators and operation panel.

5.1 Inverter Startup and Commissioning

TURN ON the inverter with at least one of the following power sources:
1) Battery, 2) PV or 3) Grid/Generator

1. Voltage of the battery must be between 160VDC - 800VDC.
2. **Turn ON** battery modules and ensure appropriate voltage on each battery. Verify nominal voltage of battery bank according to the battery installation manual.
3. **Turn ON** the external battery disconnect. Verify that the voltage at the T-REX INVERTER terminals is within 2% of the voltage measured at the battery bank output.
4. **DO NOT** reverse polarity. **DO NOT Turn OFF** battery disconnect if any current is flowing in or out of the battery.

5.1.2 Verify the PV Input

1. Input voltage must not exceed 1,000VDC.
2. Input voltage must be above the startup voltage of 150VDC.
3. Do not ground PV+ or PV-.
4. Verify polarity in each PV string. Backward polarity will measure 0Vdc by the T-REX INVERTER and will cause long term damage.
5. PV alone turns LCD screen only. Inverter requires grid and/or batteries to operate, otherwise an "Turn OFF" message will appear.
6. PV DC disconnect switches on the side of the inverter turn the PV ON.

5.1.3 Verify the GRID Input

1. Verify that voltage between Neutral and Ground is 0VAC.
2. Verify that voltage between "GRID" L1 and "LOAD" L1 is 0V. Do the same for L2 and L3.
3. Verify the AC voltage on the "GRID" terminals using digital multimeter.

5.1.4 Powering on the T-REX INVERTER

1. **Turn ON** the external "GRID" disconnect. Wait for the **"GRID"** LED indicator to turn on.
2. **Turn ON** the high-voltage battery switches. Wait for the **"BATTERY"** LED indicator to turn on.
3. PRESS down the power button to the **ON** position. Wait for the **"DC/AC"** LED indicator to turn on. This may take a few minutes.
4. **Turn ON** the external battery disconnect if the system has batteries.
5. **Turn ON** any external **"LOAD"** and **"GEN"** breakers.

When a system connected to either PV or Grid (without battery) is switched on, the LCD will still be lighted up displaying "OFF", In this situation, after switching ON/OFF button on, select "No batt" at the inverter settings to make the system work.

When turning off the inverter, please follow the following steps:
1. Turn off the AC breakers on Grid port, Load port and GEN port.
2. Press the ON/OFF button of hybrid inverter and turn off the DC breaker on battery side, then turn off the power button of the battery.
3. Switch Off the DC switches of the inverter.

5.2 Operation and Display Panel

Once the unit has been properly installed and the batteries are connected well, simply press ON/OFF button (located on the down side of the case) to turn on the unit. When system without battery connected, but connect with either PV or grid, and ON/OFF button is switched off, LCD will still light up (Display will show OFF), In this condition, when switch on ON/OFF button and select NO battery, system can still working.

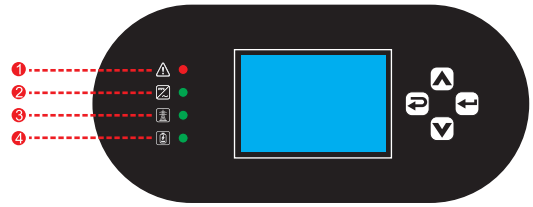

Table 5.2-1 LED indicators

Numeber	LED Indicator		Messages
1	Fault	Red led solid light	Malfunction or warning
2	DC/AC	Green led solid light	Inverter operating normal
3	GRID	Green led solid light	Grid connection normal
4	BATTERY	Green led solid light	Battery connection normal

Table5.2-2 Function Buttons

Function Key	Description
Esc	To exit setting mode
Up	To go to previous selection
Down	To go to next selection
Enter	To confirm the selection

5.3 LCD Display Icons

The LCD is touchscreen, below screen shows the overall information of the inverter.

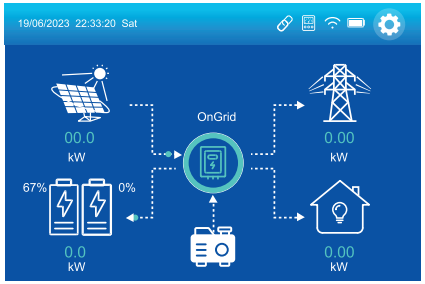

1. The icon in the center of the home screen indicates that the system is Normal operation. If it turns into "comm./F01~F100", it means the inverter has communication errors or other errors, the error message will display under this icon (F01-F100 errors, detail error info can be viewed in the System Alarms menu).

2. At the top of the screen is the time.

3. System Setup Icon, Press this set button, you can enter into the system setup screen which including Basic Setup, Battery Setup, Grid Setup, System Work Mode, Generator port use, Advanced function .

4. The main screen showing the info including Solar, Grid, Load and Battery. Its also displaying the energy flow direction by arrow. When the power is approximate to high level, the color on the panels will changing from green to red so system info showing vividly on the main screen.

- PV power and Load power always keep positive.
- Grid power negative means sell to grid, positive means get from grid.
- Battery power positive means charge, negative means discharge.

5.4 Solar Power Curve



This is Solar Panel detail page.
Press the "Energy "button will enter into the power curve page.

① Solar Panel Generation.
② Voltage, Current, Power for each MPPT.
③ Daily and total PV production.

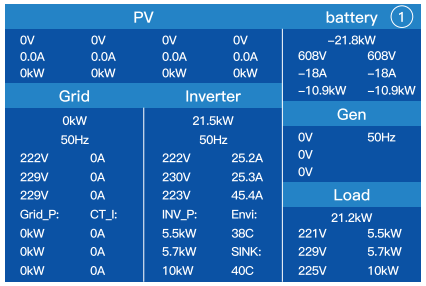

This is Inverter detail page.

① DC/AC inverter module
Voltage, Current, Power for each Phase.
SINK: mean Heat-sink temperature.

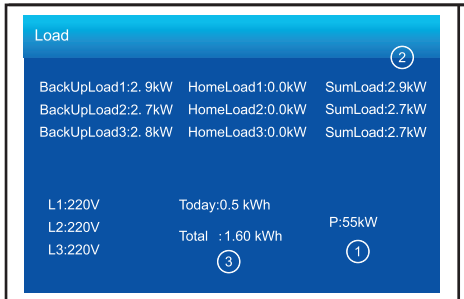

This is Back-up Load detail page.
Press the "Energy " button will enter into the power curve page.

① Back-up Power.
② Voltage, Power for each Phase.
③ Daily and total backup consumption.



This is Grid detail page.
Press the "Energy " button will enter into the power curve page.

① L: Voltage for each Phase
CT: Power detected by the external current sensors.
LD: Power detected using internal sensors on AC grid in/out breaker.
② BUY: Energy from Grid to Inverter.
SELL: Energy from Inverter to grid.

5.5 Basic Setup Menu

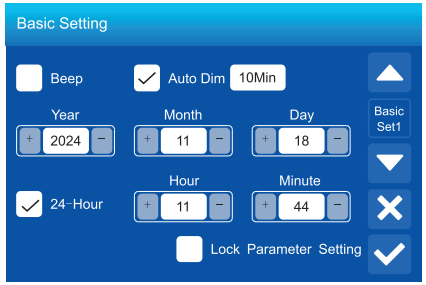

Beep: Used to turn on or off the beep sound in inverter's alarm status.
Factory Reset: Reset all parameters of the inverter.

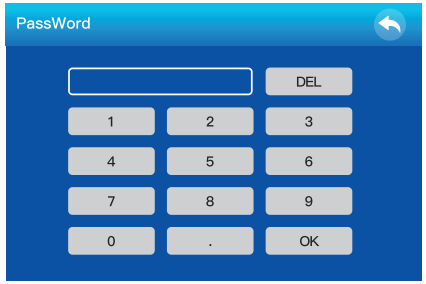

Factory Reset Password: 666666
Advanced Function: After ticking this item,it needs input the password.
The default password is 123456

Language Select:

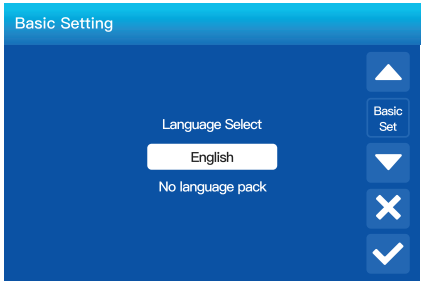

5.6 Battery Setting

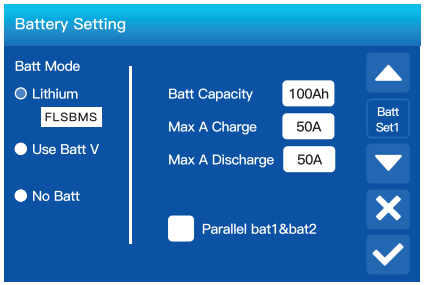

Batt Capacity: Reserved.
Lithium Mode: This is the BMS communication protocol code which can be confirmed on the "FelicityESS Approved Battery list" based on the battery model you are using.
Use Batt V: Use battery voltage for all battery related settings.
No Batt: tick this item if no battery is connected to the system.
Max A Charge/ Discharge: Max battery charge/dischargecurrent(0-50A for 29.9/30/35/40/50kW model)
· For AGM and Flooded, we recommend Ah battery size x20%=Charge/Discharge amps.
· For Lithium, we recommend Ah battery size x 50%=Charge/Discharge amps.
· For Gel, follow manufacturer' s instructions.
Parallel bat1&bat2: If a set of batteries are connected to both BAT1 and BAT2 simultaneously, this function needs to be enabled.

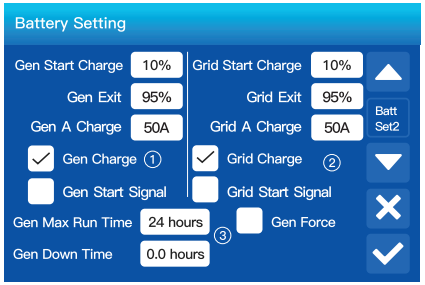

This is Battery Setup page. ①②
Gen Start Charge =10%: Percent SOC below 30% system will Auto Start a connected generator to charge the battery bank.
Gen Exit =95%: Percent SOC Over 30% system will Auto Break generator.
Gen A Charge= 50A: The maximum charging current that the generator can support.
Gen Charge: Use the power of diesel generator to charge the battery.
Gen Start Signal : The normally open relay will close when the battery SOC or voltage drop to the set value of "Start"

Gen Max Run Time: It indicates the longest time
Generator can run in one day, when time is up, the Generator will be turned off. 24H means that it does not shut down all the time.
Gen Down Time: It indicates the rest time of the Generator before the inverter start it again.

This is Grid Charge, you need select. ③
Grid Start Charge =10%: When battery SOC or voltage drop to this set value, inverter will start the generator connected to the grid port automatically to charge the battery.
Grid Exit=95%: When battery SOC or voltage raise to this set value, inverter will Break the generator connected to the grid port.
Grid A Charge=50A: maximum charging current when only use the power fed from the grid port of inverter as the power source, which means using the power of grid or the power of generator connected to the grid port.
Grid Charge: It's allowed to use power fed from the grid port, which includes grid or generator connected to the grid port, to charge the battery.
Gen Start Signal: When a generator is connected to the grid port of hybrid inverter, this 'Grid signal' can be used to control the dry contact to start or stop the generator.

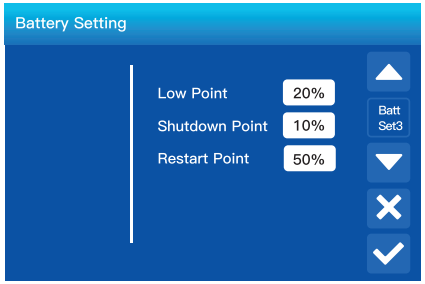

Float voltage: Only Batt Mode select "Use Batt V", this item can show.
Shutdown Point : Be valid in Off-grid mode, battery can discharge to this value, then the DC/AC inverter module of this inverter will be shut down and the solar power can only be used to charge the battery.
Low Batt Point : Be valid in On-grid mode, when the 'Grid charge has been checked and the set target battery value on 'Time of Use'page isn't less than the "Low Batt" value, the battery value will remain above the value of "Low Batt".
Restart Point: Be valid in Off-grid mode, after the DC/AC inverter module of this inverter is shut down, the PV power can only be used to charge the battery. After the battery value has resumed to this "Restart" value, the DC/Ac inverter module will restart to output AC power.

5.7 System Work Mode

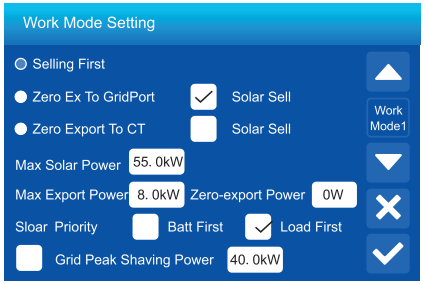

System Work Mode:
Selling First: This Mode allows hybrid inverter to sell back any excess power produced by the solar panels to the grid. If Time Of Use is active, the battery energy also can be sold into grid.
The PV energy will be used to power the load and charge the battery and then excess energy will flow to grid.
Power source priority for the load is as follows:
1. Solar Panels.
2. Grid. when Energy Pattern tick Batt First
Batteries (until programable SOC discharge is reached). when Energy Pattern tick Load First
Max Solar Power: the maximum DC input power allowed.
Zero Export To Grid Port: Hybrid inverter will only provide power to the backup load connected. The hybrid inverter will neither provide power to the home load nor sell power to grid. The built-in CT will detect power flowing back to the grid and will reduce the power of the inverter only to supply the backup load and charge the battery.

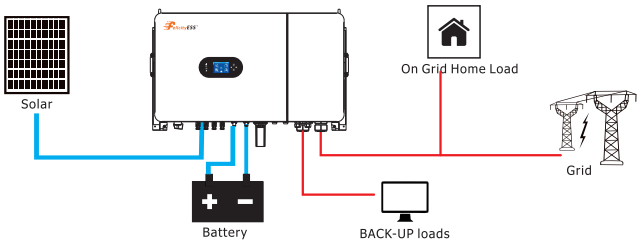

Zero Export To CT: Hybrid inverter will not only provide power to the backup load connected but also give power to the home load connected. If PV power and battery power is insufficient, it will take grid energy as supplement. The hybrid inverter will not sell power to grid. In this mode, a CT is needed. The installation method of the CT please refer to Table 4.4-2 CT Connection. The external CT will detect power flowing back to the grid and will reduce the power of the inverter only to supply the backup load, charge battery and home load.

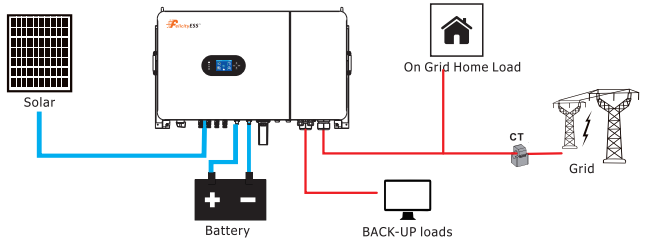

Solar Sell: "Solar sell" is supplement for Zero Export To Grid Port or Zero Export To CT: when this item is active, the surplus PV energy can be sold back to grid too. When it is active, PV Power source priority usage is as follows: load consumption and charge battery and feed into grid.

Max Export Power: Allowed the maximum output power to flow to grid.
Zero-export Power: for Zero Export To Grid Port or Zero Export To CT, and the "Solar sell" is not active. It tells the grid output power threshold to ensure the hybrid inverter won' t feed power to grid. Recommend to set it as 20-100W to ensure the hybrid inverter won' t feed power to grid.

Solar Priority: Priority of PV power usage.
Batt First: PV power is firstly used to charge the battery and then used to power the load. If PV power is insufficient, grid will make supplement for battery and load simultaneously.

Load First: PV power is firstly used to power the load and then used to charge the battery. If PV power is insufficient, Grid will provide power to load, but neither the battery power to load nor the Grid charge to battery.

Grid Peak Shaving:
1. To use Peak-Shaving on a generator, the equipment MUST be connected to the "GRID" terminal of the inverter.
2. Peak-Shaving helps reduce grid consumption during peak demand by utilizing battery backup power. It can also be used to prevent generator overload above a specified power threshold.
3. Install the CT sensors on grid / generator lines L1, L2, L3. The arrows on the CTs MUST point toward the GRID.
4. The T-REX INVERTER supplies power from the batteries whenever the "Power" threshold is met.
5. This mode will automatically adjust the "Grid Charge" amperage (A) to avoid generator overloads during battery charging.
6. Grid Peak-Shaving will automatically enable "Time of Use" and MUST be configured.

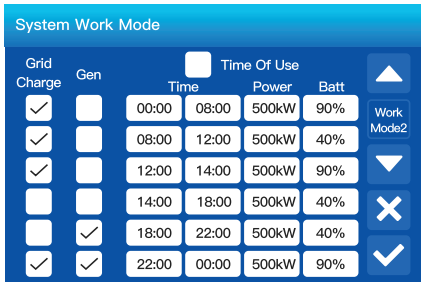

Time Of Use: it is used to program when to use grid or generator to charge the battery, and when to discharge the battery to power the load. Only tick "Time Of Use" then the follow items (Grid, charge, time, power etc.) will take effect.
Note: when tick Selling First and click Time Of Use, the battery power can be sold into grid.
Charge Source: select grid or diesel generator to charge the battery.

Grid: use grid to charge the battery in a time period.
Gen: use diesel generator to charge the battery in a time period.
Note: if tick Grid and Gen at the same time, Grid is priority. and only the Gen Charge Enable or Grid Charge Enable is tick in Battery Setting, can the corresponding Gen or Grid tick take effect.
Time: real time, range of 00:00-24:00.

Power: Max.discharge power of battery allowed.
Batt(V or SOC %): The target value of battery voltage or SOC during the current time period, If the actual SOC or voltage of the battery is lower than the target value, the battery needs to be charged. If there is a energy source like solar power or grid, the battery will be charged; If the actual SOC or voltage of the battery is higher than the target value, the battery can discharge, and when the solar power is not enough to power the load or the "Selling First "is enabled, the battery will discharge. Assuming that at the end of the previous time period, the actual battery level reaches or approaches the target value of the previous time period.

Power: Max. discharge power of (battery + PV) allowed.
Batt(V or SOC %): battery SOC % or voltage at when the action is to happen.
For example:
During 00:00-08:00,
if battery SOC is lower than 90%, it will use grid to charge the battery until battery SOC reaches 90%.
During 08:00-12:00,
if battery SOC is higher than 40%, hybrid inverter will discharge the battery until the SOC reaches 40%. At the same time, if battery SOC is lower than 40%, then grid will charge the battery SOC to 40%.
During 12:00-14:00,
if battery SOC is lower than 90%, it will use grid to charge the battery until battery SOC reaches 90%.
During 14:00-18:00,
when battery SOC is higher than 40%, hybrid inverter will discharge the battery until the SOC reaches 40%.if battery SOC is lower than 40%, neither the diesel generator nor the grid will charge the battery.

During 18:00-20:00,
when battery SOC is higher than 40%, hybrid inverter will discharge the battery until the SOC reaches 40%. At the same time, if battery SOC is lower than 40%, then diesel generator will charge the battery SOC to 40%.
During 22:00-00:00,
if battery SOC is lower than 90%, it will use grid or diesel generator to charge the battery until battery SOC reaches 90%.

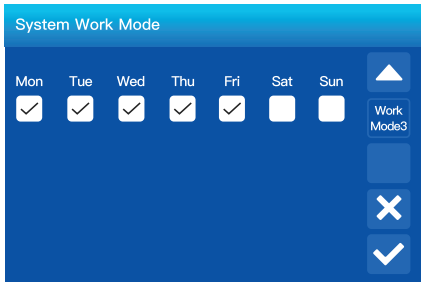

It allows users to choose which day to execute the setting of "Time Of Use".
For example, the inverter will execute the time of use page on Mon/Tue/Wed/Thu/Fri only.

5.8 Grid Setting

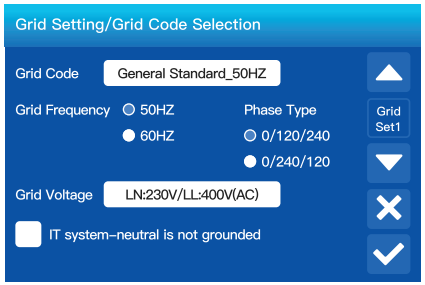

Grid Code:
0: Germany_VDE4105,
2: General Standard_50Hz,
3: General Standard_60Hz,
4: Italy_CEI_021_2019,
5: Britain_G99,
6: Australia_A,
6: Australia_A,
7: NewZealand_AS4777,
8: SouthAfrican_NRS097,
9: Netherland_EN 50549-1,
10: Brazil,
11: En50549,
12: Poland_NC_RFG,
13: Czech_CSN 50549-1,
14: Austria_R25:2020-03,
15: Austria_OVE-directive_R25,
16: Spain_NTS_2021,
17: Spain_UNE217001,
18: cNetherland.

Grid level: there' re several voltage levels for the inverter output voltage when it is in off-grid mode.LN:220V/LL:380V(AC),LN:230V/LL:400V(AC)

IT system: If the grid system is IT system, then please enable this option. All the live lines of IT system are insulated from gfound, and the neutral point of the IT system is grounded through high impedance or not grounded (as shown in the following figure).

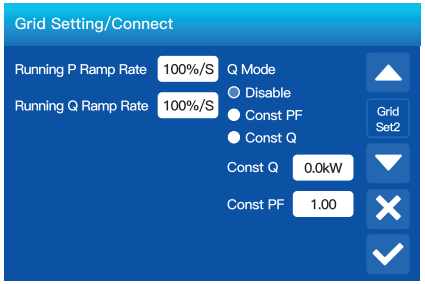

Running P Ramp Rate: It is the power ramp response to the active power reference in normal running.
Running Q Ramp Rate: It is the power ramp response to the Reactive power reference in normal running.

Const Q: setting the reactive power value. Const Q >0 means Inverter output capacitive reactive power, Const Q <0 means Inverter output Inductive reactive power.
Const PF: setting the power factor(cos φ)value. Const PF>0 means Inverter output Inductive reactive power(or inverter will absorb capacitive reactive power from the power grid),Const PF<0 means Inverter output capacitive reactive power.

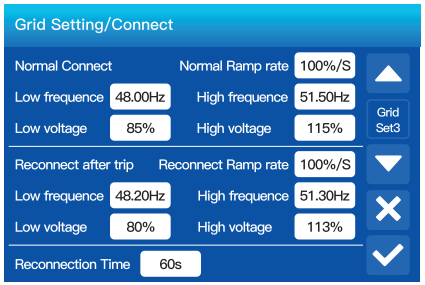

Normal connect: The allowed grid voltage/frequencyrange when the inverter operates normally.
Normal Ramp rate: It is the startup power ramp.
Reconnect after trip: The allowed grid voltage/frequency range for the inverter connects the grid after the inverter trip from the grid.
Reconnect Ramp rate: It is the reconnection power ramp.
Reconnection time: The waiting time for the inverterconnects the grid again after tripping.

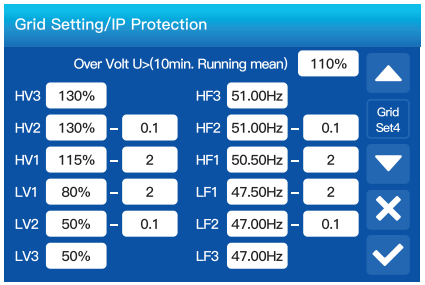

HV1: Level 1 overvoltage protection point;,
HV2: Level 2 overvoltage protection point;
HV3: Level 3 overvoltage protection point.

LV1: Level 1 undervoltage protection point;
LV2: Level 2 undervoltage protection point;
LV3: Level 3 undervoltage protection point.

HF1: Level l over frequency protection point;
HF2: Level2 over frequency protection point;
HF3: Level 3 over frequency protection point.

LF1: Level l under frequency protection point;
LF2: Level2 under frequency protection point;
LF3: Level 3 under frequency protection point.

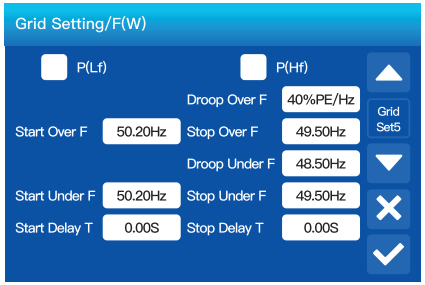

P(Lf): It's used to adjust the output active power of inverter according to the low grid frequency.
P(Hf): It's used to adjust the output active power of inverter according to the high grid frequency.
Droop F: percentage of nominal power per Hz
For example, "Start freq F=50.2Hz, Stop freq F=51.5Hz.
Droop F=40%PE/Hz" when the grid frequency reaches51.2Hz, the inverter will decrease its active power at Droop F of 40%. And then when grid system frequency is less than 50.1Hz, the inverter will stop decreasing output power. For the detailed setup values, please follow the local grid code.

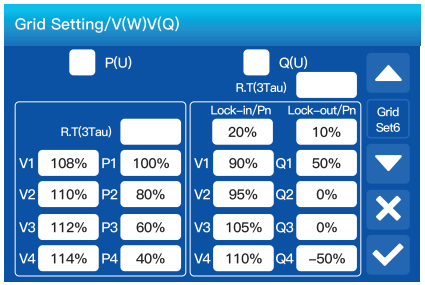

P(U): It is used to adjust the inverter's active poweraccording to the set grid voltage.
Q(U): It is used to adjust the inverter's reactive poweraccording to the set grid voltage.These two functions are used to adjust inverter's output power (active power and reactive power) when grid voltage changes.
Lock-in/Pn 5%: When the inverter active power is less than 5% rated power, the V(Q) mode will not take effect.
Lock-out/Pn 20%: If the inverter active power is increasing from 5% to 20% rated power, the V(Q) modewill take effect again.

For example: V2=110%, P2=80%. When the grid voltage reaches 110% of the rated grid voltage, inverter will reduce its active power output to 80% of the rated power.
For example: V1=94%, Q1=44%. When the grid voltage reaches 94% of the rated grid voltage inverter will output reactive power that accounts for 44% of the rated power. For the detailed setup values, please follow the local grid code.

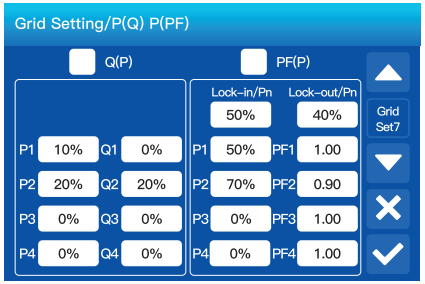

P(Q): it is used to adjust the output reactive power of inverter according to the set active power.
P(PF): It is used to adjust the PF of inverter according to the set active power.For the detailed setup values, please follow the loca!grid code.
Lock-in/Pn 50%: When the output active power of inverter is less than 50% of inverter's rated power, it won't enter the P(PF) mode.
Lock-out/Pn 50%: When the output active power of inverter is higher than 50% of inverter's rated power,itwill enter the P(PF) mode.

Note : only when the grid voltage is equal to or higher than 1.05 times of the rated grid voltage, then the P(PF)mode will take effect.

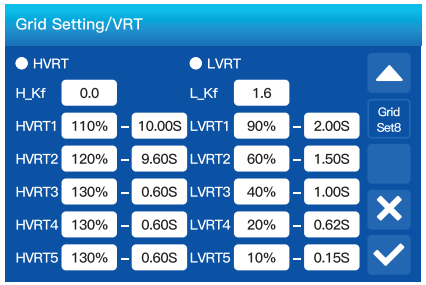

Reserved: This function is reserved.It is not recommended.

5.9 Generator Setting

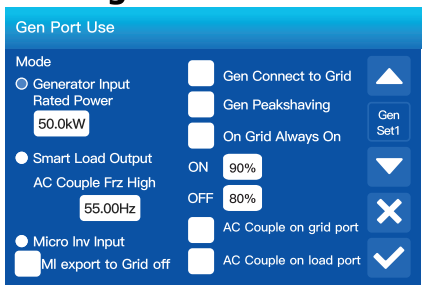

Generator input rated power: allowed Max. power from diesel generator.
AC Couple on Grid port: Reserved
AC Couple on Load port: Use the Load port as an AC couple input port, which can be connected with micro-inverter or other Grid-Tied inverter.
GEN Connect to Grid: connect the diesel generator to thegrid input port.
Gen Peak shaving: Limit the maximum output power of the generator to the set rated power on "GEN PORT USE" page, the rest of power consumption will be provided by inverter to ensure that the generator will not overload.
Smart Load Output: Use the GEN port as an AC output port, and the load connected to this port can be controlled on/off by the hybrid inverter.
e.g.ON: 100%,OFF: 95%: When the battery bank SOC reaches 100%, Smart Load Port will switch on automatically and power the load connected. when the battery bank SOC < 95% , the Smart Load Port will switch off automatically.

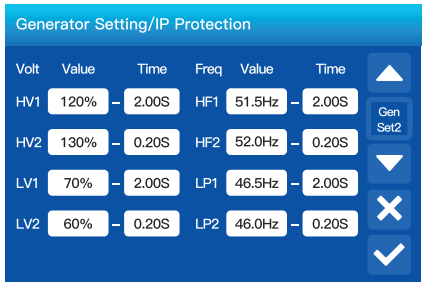

HV1: Level 1 overvoltage protection point and protection time;
HV2: Level 2 overvoltage protection point and protection time;
LV1: Level 1 undervoltage protection point and protection time;
LV2: Level 2 undervoltage protection point and protection time;
HF1: Level 1 over frequency protection point and protection time;
HF2: Level 2 over frequency protection point and protection time;
LF1: Level 1 under frequency protection point and protection time;
LF2: Level 2 under frequency protection point and protection time.

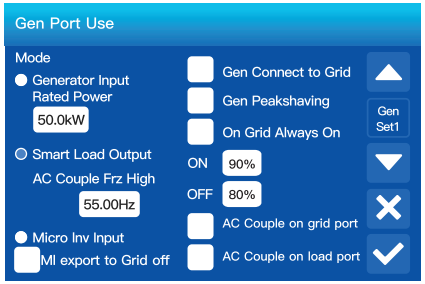

Smart Load OFF Batt
• Battery SOC or voltage at which the Smart load will switch off.
Smart Load ON Batt
• Battery SOC or voltage at which the Smart load will switch on.
On Grid always on: When "on Grid always on" is checked, the smart load port will always keep switching on if hybrid inverter is operating in on-grid mode.

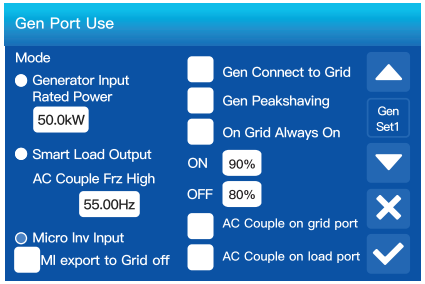

Micro inv input: Use the GEN port as an AC couple input port which can be connected with micro-inverter or other Grid-Tied inverter.
***Micro inv Input ON:** When the hybrid inverter operates in off-grid mode and the SOC or voltage of battery drops to this set value,the relays on GEN port of hybrid inverter will turn to normally closed(ON), then the Grid-Tied inverter will generate solar power and feed into hybrid inverter. When the hybrid inverter operates in on-grid mode, this parameter will be invalid, the relays on GEN port of hybrid inverter will always be normally colsed(ON),Grid-Tied inverter can operate normally.
AC Couple Frz High: If choosing"Micro Inv input", as the battery SOC reaches gradually setting value (OFF), during the process, the microinverter output power will decrease linear. When the batterySOC equals to the setting value (OFF), the system frequency will become the setting value (AC couple Frz high) and the Microinverter will stop working.
MI export to Grid off: Stop exporting power produced by the microinverter or Grid Tied inverter to the grid.
***Note:** Micro Inv Input OFF and On is valid for some certain FW version only.

5.10 Advanced Function

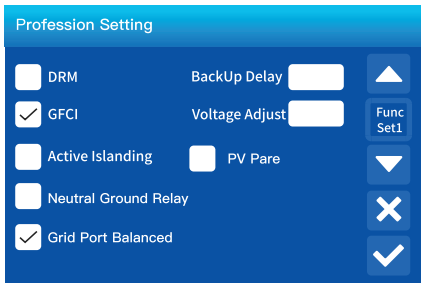

DRM: For AS4777 standard.
Backup Delay: When the grid cuts off, the inverter will output power after the set time.
For example, backup delay: 600s. the inverter will give output power after 600s when the grid cuts off.
Note: for some old FW version, this function is not available
GFCI: the ground-fault circuit interrupter function.
Active Islanding: Active islanding detection enable or not.
Voltage Adjust: if the inverter is working at off grid, we can adjust the output voltage by Voltage Adjust.

Neutral-Ground Relay: If"Signal island mode" is checked and When inverter is in off-grid mode, the relay on the Neutral line of load port will switch on, then the N line of load port will bind to ground.

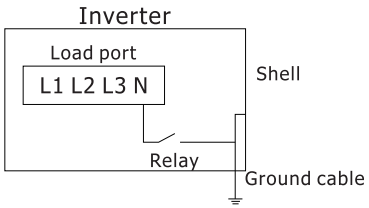

Grid Port Balanced: When the loads connected to the Load port have an unbalanced distribution on the three phasesand the inverter is working in on-grid mode, enabling this function will ensure an equal power absorption from the three phasesof grid.
PV Para: Check it when 4 groups PV panels are connected in parallel.

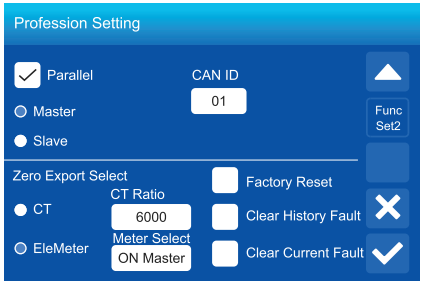

Parallel: if user want to parallel operation to Expand system capacity, we need to click the parallel. And in a parallel system, we can have and must have only one Master, and the others must be set as Slaver, and we need to set a unique CAN ID to each inverter, the CAN ID is from 1 to 10.
Master: Select any hybrid inverter in the parallel system as the master inverter, and the master inverter needs to manage the working mode of the parallel system.
Slave: Set the other inverters managed by the master inverter as slave inverter.
CAN ID: The Modbus address of each inverter, should be different.
Zero Export Select: Select CT or EleMeter when using zero-export to CT work mode.
CT Ratio: The CT ratio of the zero-export to CT mode.

1. The default transformation ratio for CT is 3000:1
2. The default range of CT is 300A

Meter Select: use the different meters.e.g.Acrel and Eastron.
Factory Reset: Reset all parameters of the inverter.
Clear History Fault: Clear all fault records on the LCD.
Clear Current Fault: Clear all current fault so that Inverter operating normal.

6. Work Mode

Mode I:Basic

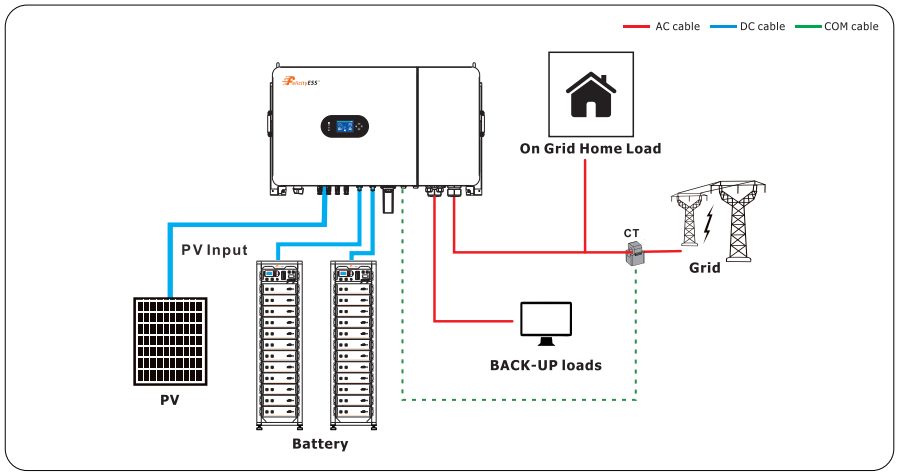

The two battery input terminals of the T-REX INVERTER can be configured as parallel batteries in the settings screen. If a charging/discharging rate of 100A is required, the battery must be connected to two input terminals BAT1 and BAT2. If multiple batteries are connected to a single inverter input terminal, the positive and negative outputs of the batteries must be connected together before connecting them to the inverter terminal.

1.ALL systems MUST be connected to their own battery bank.
2.DO NOT parallel batteries between inverters.

Mode II:With Generator

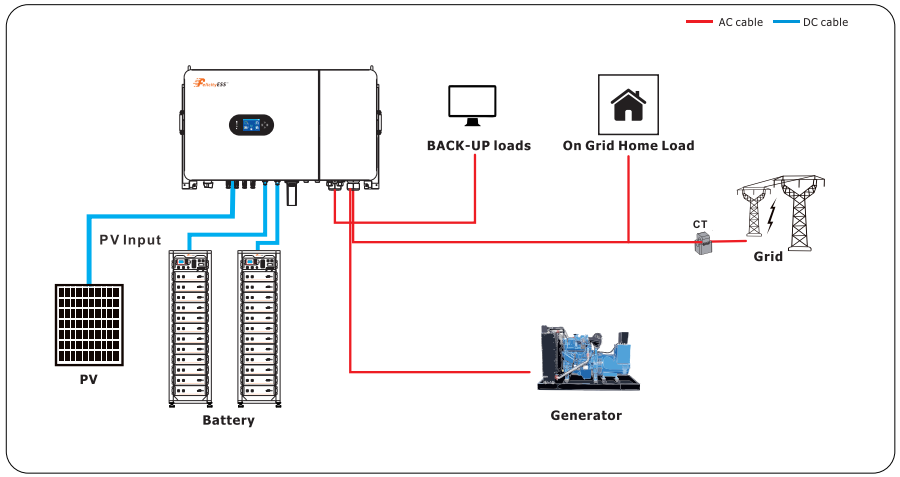

Generators Smaller than 124kW (On "GEN" Input)
1. ONLY supports three-phase 400Vac generators.
2. 200A rated "GEN"terminal. 180A continuous.
3. A THD (Total Harmonic Distortion) of less than 15% is required for stable operation.

Generators Greater than 124kW (On "GRID" Input)
1. ONLY supports three-phase 400Vac generators.
2. Optimal way to integrate generators for Off-Grid or Grid-Tied systems with automatic or manual transfer switches.
3. Programming "GEN Connect to Grid Input" and generator connected to grid port.
4. DO NOT use "Sell to Grid" when generator is connected to the GRID input, can cause potential damage the generator.

Installation of CT sensors on generator lines is only required if "Peak Shaving" is intended to be used.

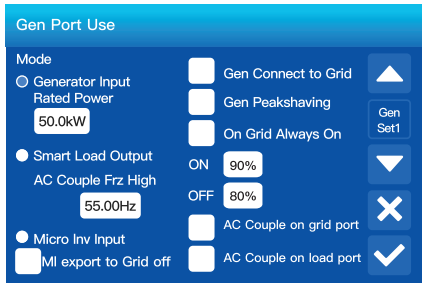

Mode III:With Smart-Load

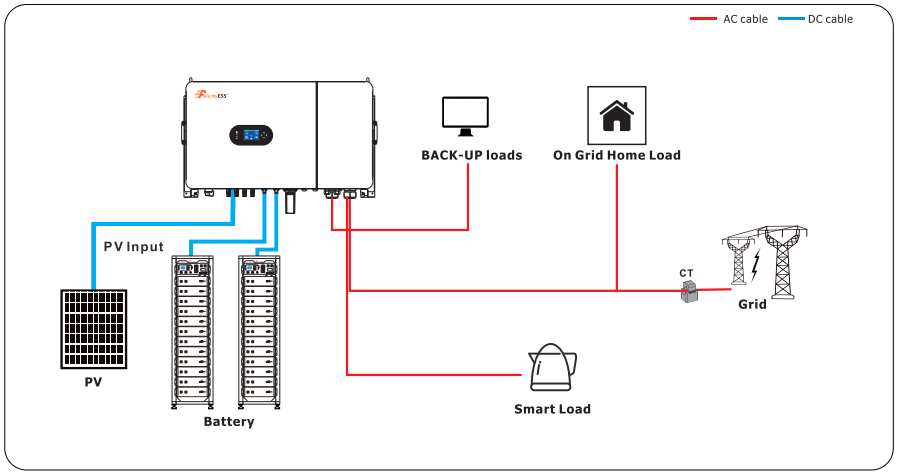

1. This mode uses the **"GEN"** input as a load output that delivers power when the battery exceeds a user programmable threshold or when the T-REX INVERTER is connected to the grid.
2. When **"SmartLoad output"** is enabled, the "GEN" input turns into an output to power high power loads such as a water heater, irrigation pump, AC unit, pool pump, or any other load.
3. When **"On Grid always on"** is enabled, the "GEN" terminal will always output power as long as the grid is connected, regardless of battery charge.

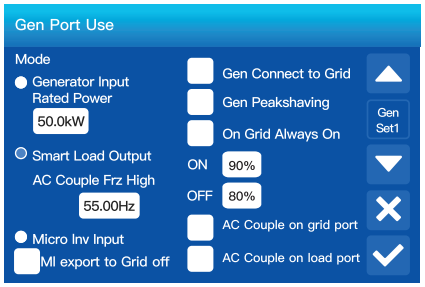

Mode IV: AC Couple

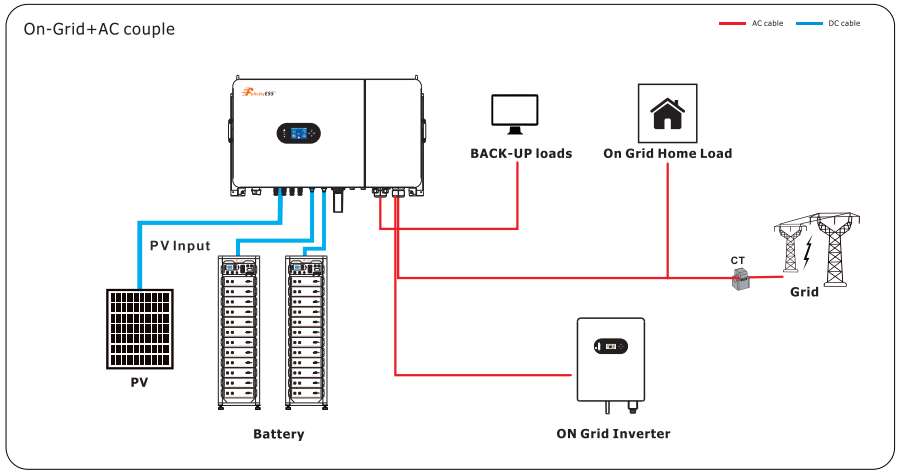

The T-REX INVERTER supports the addition of grid-tied solar inverters, this allows the systems total solar power input to be expanded by coupling 3Φ micro or string inverters into the "GEN" terminals of the inverter.

An entirely AC-coupled solar system is not recommended as power control and monitoring is limited but is supported. Having DC-coupled modules, or a combination of DC-coupled modules and AC-coupled inverters is always preferred. AC-coupled inverters used in this application need to be either EN 50549 or VDE 4105 certified. This certification confirms the inverters' ability to disconnect from the grid based on frequency and ensures that the T-REX INVERTER will safely be able to frequency shift to control the AC coupled production.
In off-grid systems or during grid-forming operation, the T-REX INVERTER uses frequency shifting to curtail and shutdown AC-coupled inverters when the battery is full, allowing AC-coupled solar to produce power in an outage scenario. When the T-REX INVERTER is connected to the grid any AC-coupled inverters connected will always sell all excess solar power back to the grid. Selecting "Limited to Load" will NOT limit production when AC coupled.

AC Coupling on the GRID Side
Installing AC coupled inverters upstream of the GRID port of the T-REX INVERTER, such as with a load or supply side connection, is supported for grid connected systems but has some notable limitations when using the inverter for backup or grid-forming mode:
- Does NOT allow the usage of grid-tied inverter production during grid outages to charge batteries or power loads.
- Does NOT allow monitoring of PV production in inverter and Fsolar monitoring.

AC Coupling on the GEN Terminal
AC Coupling via the GEN Terminal is the preferred method for integrating AC-coupled solar on the T-REX INVERTER. This method offers several key advantages:
- Allows the usage of grid-tied inverter production during grid outages.
- Allows the integration of grid-tie inverters in off-grid systems.
Using the GEN terminal also allows for comprehensive monitoring of solar production, giving users valuable insights into the system's performance.

7. Warranty

As to Warranty terms, please refer to <General Warranty Agreement>.
Under the guidance of our company, customers return our products so that our company can provide service of maintenance or replacement of products of the same value. Customers need to pay the necessary freight and other related costs. Any replacement or repair of the product will cover the remaining warranty period of the product. If any part of the product or product is replaced by the company itself during the warranty period, all rights and interests of there placement product or component belong to the company.

Factory warranty does not include damage due to the following reasons:

- Damage during transportation of equipment;
- Damage caused by incorrect installation or commissioning;
- Damage caused by failure to comply with operation instructions, installation instructions or maintenance instructions;
- Damage caused by attempts to modify, alter or repair products;
- Damage caused by incorrect use or operation;
- Damage caused by insufficient ventilation of equipment;
- Damage caused by failure to comply with applicable safety standards or regulations;
- Damage caused by natural disasters or force majeure (e.g. floods, lightning, over voltage, storms, fires, etc.)

In addition, normal wear or any other failure will not affect the basic operation of the product. Any external scratches, stains or natural mechanical wear does not represent a defect in the product.

8. Troubleshooting

Perform troubleshooting according to the solutions in the table below. Contact the after-sales service if these methods do not work.
Collect the information below before contacting the after-sales service, so that the problem scan be solved quickly.

- Inverter information like serial number, firmware version, installation date, fault time, fault freguency,etc.
- Installation environment, including weather conditions, whether the PV modules are sheltered or shadowed, etc. It is recommended to provide some photos and videos to assist in analyzing the problem.
- Utility grid situation.

9. Warning Code

When fault event happens, the fault LED is flashing. At the same time, warning code, icon ⚠ is shown on the LCD screen.

Warning Code	Warning Information	Warning Information
13	DC lightning protection alarm	If the DC lightning protector is abnormal, check whether the lightning protector is abnormal.
14	AC lightning protection alarm	If the AC lightning protector is abnormal, check whether the lightning protector is abnormal.
18	Fan 1 alarm	Fan 1 stops abnormally, check fan wiring.
19	Fan 2 alarm	Fan 2 stops abnormally, check fan wiring.
20	Fan 3 alarm	Fan 3 stops abnormally, check fan wiring.
21	Fan 4 alarm	Fan 4 stops abnormally, check fan wiring.
22	Internal fan alarm	Internal fan stops working abnormally, check internal fan wiring.

10. Fault Code

This chapter describes the fault alarm and fault code for quick troubleshooting.

Table 10-1 Fault code

Warning Code	Warning Information	Warning Information
01	PV overvoltage fault	The voltage of the PV is too high, check the voltage of the string
05	PV overcurrent fault	The current of the PV is too large, check the string current
09	PV reverse connection fault	Pv string positive and negative connection, check the string wiring
13	PV arc fault	Reserved
14	Battery 1 overvoltage fault	Battery 1 voltage is too high, the battery should be discharged
15	Battery 2 overvoltage fault	Battery 2 voltage is too high, the battery should be discharged
18	Battery 1 Undervoltage fault	Battery 1 voltage is too low, the battery should be charged
19	Battery 2 Undervoltage fault	Battery 2 voltage is too low, the battery should be charged

20	Battery 1 overcurrent fault	Battery 1 current is too large, check the battery charge and discharge power
21	Battery 2 overcurrent fault	Battery 2 current is too large, check the battery charge and discharge power
24	Battery 1 reverse connection fault	Battery 1 bositive and negative poles is reversed, check the battery wiring
25	Battery 2 reverse connection fault	Battery 2 bositive and negative poles is reversed, check the battery wiring
26	Battery 1 relay circuit fault	Battery 1 relay not closing properly causing open circuit, or battery 1 relay not properly disconnected causing short circuit,shutdown and restart
27	Battery 2 relay circuit fault	Battery 2 relay not closing properly causing open circuit, or battery 1 relay not properly disconnected causing short circuit, shutdown and restart
30	Battery 1 soft start fault	Battery 1 fails to raise the input voltage normally, shutdown and restart
31	Battery 2 soft start fault	Battery 2 fails to raise the input voltage normally, shutdown and restart
32	Battery 1 SOC Low fault	Battery 1 SOC is too low, the battery should be charged
33	Battery 2 SOC lOW fault	Battery 2 SOC is too low, the battery should be charged
35	Bus overvoltage fault	Bus voltage is too high, shutdown and restart.
37	Bus undervoltage fault	Bus voltage is too low, shutdown and restart.
38	Positive and negative bus imbalance fault	Positive bus voltage does not match negative bus voltage, shutdown and restart.
39	Bus soft start fault	Bus voltage fails to rise normally at startup, shutdown and restart.
41	Balanced Bridge Overcurrent Fault	Balanced bridge current is too high, shutdown and restart.
43	Inverter self check fault	Reserved
44	Inverter soft start fault	Inverter voltage fails to rise normally at startup, shutdown and restart
45	Inverter voltage fault	Inverter voltage is too high, shutdown and restart.
46	Inverter overcurrent fault	Inverter current is too high, check the given power and load size.
48	Inverter short circuit fault	Short circuit at inverter, shutdown and restart.
49	Inverter voltage DC component fault	Inverter voltage DC component is too high, shutdown and restart.

50	Inverter current DC component fault	Inverter current DC component is too high, shutdown and restart.
51	Grid Overvoltage Fault	The grid voltage is too high, check whether the grid voltage is within the normal range
52	Grid Undervoltage Fault	The grid voltage is too low, check whether the grid voltage is within the normal range
53	Grid Over-frequency Fault	The grid frequency is too high, check whether the grid frequency is within the normal range
54	Grid Underfrequency Fault	The grid frequency is too low, check whether the grid frequency is within the normal range
55	Grid Reverse Sequence Fault	The grid phase sequence is reversed, check the grid phase sequence wiring
56	Grid Overload Fault	The load of the grid access is too large, and the load should be reduced
59	Load overload Fault	The load exceeds , the load should be reduced
63	EPO Fault	Inverter emergency shutdown
64	IGBT over-temperature fault	Inverter device temperature is too high.
65	Ambient Overtemperature	The ambient temperature of the inverter is too high
66	Fan Fault	Fan is faulty, check whether the fan is normal
71	EEPROM Fault	There was an error with the EEPROM write
72	12V auxiliary power supply fault	Failure of 12V auxiliary power supply.
73	CT or Hall open circuit fault	current sensing device is faulty, check CT or Hall element connections.
74	Main and auxiliary DSP communication fault	There is an error in the DSP communication, try to upgrade the software
76	Leakage current fault	The leakage current of the inverter is too large, check the wiring of the inverter
77	BUS Insulation Impedance fault	The insulation of the BUS string is abnormal
78	BAT1 Insulation Impedance fault	Battery 1 insulation is abnormal
79	BAT2 Insulation Impedance	Battery 2 insulation is abnormal
80	GND fault	Reserved

81	GEN Relay fault	Gen relay not closing properly causing open circuit, or Gen relay not properly disconnected causing short circuit, shutdown and restart
82	Grid Relay fault	Grid relay not closing properly causing open circuit, or Grid relay not properly disconnected causing short circuit, shutdown and restart
83	Inv Relay fault	Inv relay not closing properly causing open circuit, or Inv relay not properly disconnected causing short circuit, shutdown and restart
85	Load Relay fault	Load relay not closing properly causing open circuit, or Load relay not properly disconnected causing short circuit, shutdown and restart
86	PWM SYNC fault	The inverter is connected to abnormal parallel communication
87	Parallel CAN communication	The inverter is connected to abnormal parallel communication
88	Parallel host loss fault	Parallel host disconnects from the system, check whether the hosts is normal
89	Zero SYNC fault	The inverter is connected to abnormal parallel communication
90	DRM fault	Reserved
92	BMS1 com Circuit fault	BMS1 fails to communicate normally, check the BMS1 communication cable.
93	BMS2 com Circuit fault	BMS2 fails to communicate normally, check the BMS2 communication cable.
95	Master Clash fault	There is more than two Parallel host , check whether the hosts is normal
96	Gen overvoltage fault	The gen voltage is too high,check whether the gen voltage is within the normal range
97	Gen Undervoltage fault	The gen voltage is too high,check whether the gen voltage is within the normal range
98	Gen Over-frequency Fault	The gen frequency is too high,check whether the gen frequency is within the normal range
99	Gen Underfrequency Fault	The gen frequency is too low, check whether the gen frequency is within the normal range
100	Gen Reverse Sequence Fault	The gen phase sequence is reversed,check the gen phase sequence wiring
101	Gen Overload Fault	The load of the gen access is too large, and the load should be reduced
102	MCU Communication Fault	There is an error in the MCU communication, try to upgrade the software
103	Remote off	Remotely shutdown It means the inverter is remotely controlled
104	Mode change	1 When the grid type and frequency have changed it will report F65. 2. When the battery mode has been changed to "No battery" mode, it will report F65.

Appendix I

Model	T-REX -50KHP3G01	T-REX -40KHP3G01	T-REX -30KHP3G01	T-REX -29K9HP3G01	T-REX -25KHP3G01
Battery Input Data					
Battery Type	LFP (LiFePO4)				
Battery Voltage Range	160~800Vd.c.				
Max. Charging Current	50+50(A)				
Max. Discharging Current	50+50(A)				
Number of battery input	2				
PV String Input Data					
Max. DC Input Power	65 kW	52 kW	39 kW	38. 87 kW	32. 5 kW
Max. DC Input Voltage	1000Vd.c.				
Min. DC Input Voltage	150Vd.c.				
Start-up Voltage	250Vd.c.				
Rated DC Input Voltage	600Vd.c.				
MPPT Range	200~850Vd.c.				
Full Load DC Voltage Range	450~850Vd.c.	360~850Vd.c.	360~850Vd.c.	360~850Vd.c.	450~850Vd.c.
PV Input Current	36+36+36+36(A)		36+36+36(A)		36+36(A)
Max. PV Isc	55+55+55+55(A)		55+55+55(A)		55+55(A)
No.of MPP Trackers	4		3		2
No.of Strings per MPP Tracker	2		2		2
AC Output Data					
Rated AC Output Power	50 kW	40 kW	30 kW	29. 9 kW	25 kW
Max. AC Output Power	55 kW	44 kW	33 kW	29. 9 kW	27. 5 kW
AC Output Rated Current	72.5 A	58 A	43. 5 A	43. 4 A	36.3 A
Max. AC Current	79.7 A	63.8 A	47. 9A	43. 4 A	39.9 A
Rated AC Voltage	220/380,230/400 Vac (-20%~+15%)				
AC Wiring Mode	3W+N+PE				
Rated AC Frequency	50 /60 Hz （45~55Hz/55~65Hz)				
THDI	<3% (At Rated Power)				
Power Factor	0.8(leading) to 0.8(lagging)				
Efficiency					
Max. Efficiency	97.60%				
Euro Efficiency	97.00%				
MPPT Efficiency	99.90%				

Protection	
PV Input Lightning Protection	Integrated
PV String Input Reverse Polarity Protection	Integrated
Battery Input Lightning Protection	Integrated
Battery Input Reverse Polarity Protection	Integrated
Insulation Resistor Detection	Integrated
Residual Current Monitoring Unit	Integrated
Output Over Current Protection	Integrated
Output Shorted Protection	Integrated
Output Over Voltage Protection	Integrated
Anti-islanding Protection	Integrated
AC Output Lightning Protection	Integrated
Certification and Standards	
Grid Regulation	NRS 097-2-1,VDE4105,EN50549-1,AS 4777.2, G99/1,CEI 0-21,NC.RFG
Safety EMC / Standard	IEC/EN 61000-6-1/2/3/4,IEC/EN 62109-1,IEC/EN 62109-2
General Data	
Net Weight	85.6KG
Gross Weight	102.3KG
Product Dimension	940*582*340mm
Package Dimension	1114*774*469mm
Protection Degree	IP65
Operating Temperature Range	-25 to 60 ℃ (> 50 ℃ derating)
Humidity	0 ~ 95 % (No condensation)
Cooling	Smart cooling
Altitude	3000 m (> 2000 m derating)
Communication with BMS	RS485,CAN
Monitor module	WiFi/GPRS
Installation Style	Wall-mounted
Warranty[1]	10 years
[1]Conditions apply, refer to FelicityESS Warranty policy.	

Appendix II

1. Split Core Current Transformer (CT) dimension: (mm)
2. Secondary output cable length is 4m.

