BENNING

Operating manual

Translation of the German original version

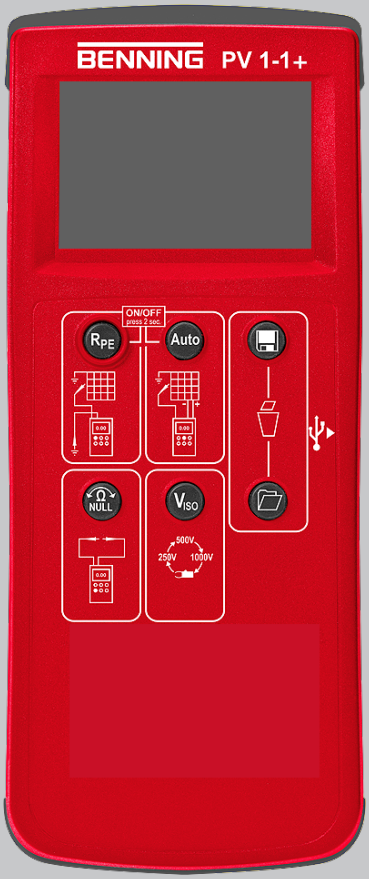

BENNING PV 1-1+

5290 / 06/2023 en

Legal notice

Notes concerning the documentation

Ensure that the applicable documentation is used for this product. For safe handling, knowledge that is provided in these instructions is required.

The product may only be handled while following this documentation, particularly the safety instructions and warnings it contains. The personnel must be qualified for the respective task and have the capability to recognise risks and prevent possible dangers.

Manufacturer and holder of rights

BENNING Elektrotechnik und Elektronik GmbH & Co. KG

Münsterstraße 135 – 137

46397 Bocholt

Germany

Phone: +49 2871 / 93-0

E-mail: duspol@benning.de

Internet: www.benning.de

Commercial register Coesfeld HRA no. 4661

Copyright

© 2023, BENNING Elektrotechnik und Elektronik GmbH & Co. KG

All rights reserved.

This document – particularly all of the contents, texts, photographs and graphics that it contains – are protected by copyright.

No part of this documentation or the associated contents may be reproduced or edited, copied or distributed using electronic media in any form (printed, photocopied or using any other method) without express written permission.

Disclaimer

The contents of the documentation has been checked to ensure that it corresponds to the hardware and software described. Nevertheless, deviations cannot be ruled out, so Benning cannot guarantee complete correspondence. The contents of this documentation are checked at regular intervals, and any corrections that are needed are contained in the versions that follow.

General non-discrimination

Benning is aware of the importance of language with regard to the gender equality and endeavors to take this into account at all times. To improve readability, we have refrained from consistently using differentiating formulations.

Table of contents

1 Introduction 7

1.1 General notes 7

1.2 History 8

1.3 Service & support 9

2 Safety 10

2.1 Warning system 10

2.2 Standards applied 10

2.3 Symbols used 11

2.4 Intended use 12

2.5 Special types of risks 14

3 Scope of delivery 15

4 Device description 16

4.1 Device structure 16

4.2 Functions 18

4.2.1 Measured value memory 19

4.2.2 Installing the data logger and driver 20

4.2.3 Reading out measured values via the USB interface 20

4.2.4 Error messages 21

4.2.5 BENNING SUN 2 21

4.3 Measuring ranges 22

4.3.1 Resistance ranges 22

4.3.2 Voltage ranges 23

4.3.3 Current ranges 23

5 Operation 24

5.1 Requirements for tests and measurements 24

5.2 Connecting the safety measuring lines 25

5.3 Configuration 26

5.3.1 Setting the “Auto-Power-Off” (APO) function 26

5.3.2 Setting the date and the time 26

5.3.3 Null balancing of the 4 mm safety measuring lines 27

5.4 Protective conductor resistance measurement 28

5.5 Automatic PV measurement 30

5.6 DC and AC voltage measurement 32

5.7 Current measurement using the optional BENNING CC 3 33

5.8 Measuring several identical PV modules / PV strings 34

5.9 BENNING SUN 2 (optional) 35

5.9.1 Pairing the device with the BENNING SUN 2 35
5.9.2 Unpairing the device from the BENNING SUN 2 36
5.9.3 Enabling / disabling the radio transmission of the BENNING SUN 2 37

6 Maintenance 38

6.1 Maintenance schedule 38
6.2 Making the device free of voltage 38
6.3 Cleaning the device 39
6.4 Replacing the batteries 40
6.5 Calibrating the device 41
6.6 Replacing the fuse 41

7 Technical data 42

8 Disposal and environmental protection 44

Index 45

Table of figures

Figure 1	BENNING PV 1-1+ device structure	16
Figure 2	Digital display	17
Figure 3	Null balancing of the 4 mm safety measuring lines	27
Figure 4	Protective conductor resistance	28
Figure 5	Automatic PV measurement	30
Figure 6	DC and AC voltage measurement	32
Figure 7	Current measurement using the optional BENNING CC 3	33
Figure 8	Automatic PV measurement	34
Figure 9	Radio connection to the BENNING SUN 2	37
Figure 10	Battery replacement (exemplary)	40

List of tables

Table 1	History	8
Table 2	Symbols on the device	11
Table 3	Symbols used in the operating manual	11
Table 4	Symbols (warnings) on the digital display	17
Table 5	Symbols (measuring functions) on the digital display	18
Table 6	Error messages	21
Table 7	Measuring range for measuring the protective conductor resistance RPE	22
Table 8	Measuring range for measuring the insulating resistance RISO	22
Table 9	Preset limits of the insulating resistance	22
Table 10	Measuring range for measuring the open-circuit voltage VOC of the PV module or PV string	23
Table 11	Measuring range for measuring the voltage via the 4 mm test sockets	23
Table 12	Measuring range for measuring the short-circuit current ISC of the PV module or PV string	23
Table 13	Measuring range for measuring the current using the current clamp adapter BENNING CC 3 (optional)	23
Table 14	Maintenance schedule	38
Table 15	Technical data	42

1 Introduction

The battery-operated PV tester BENNING PV 1-1+ described here (in the following only referred to as “device”) is intended for commissioning tests and periodic inspection of grid-connected photovoltaic systems in compliance with IEC / DIN EN 62446-1 (VDE 0126-23-1) and IEC / DIN EN 62446-2 (VDE 0126-23-2). The device enables you to perform the following tests and measurements:

- Protective conductor resistance measurement with a testing current of 200 mA-DC
- Automatic display of the voltage polarity with acoustic / visual warning in case of wrong polarity
- Open-circuit voltage measurement on the PV module / PV string up to 1 000 V-DC
- Short-circuit current measurement on the PV module / PV string up to 15 A-DC
- Insulating resistance measurement with testing voltages of 250 V-DC, 500 V-DC or 1 000 V-DC
- Functional test by current measurement using the optional current clamp adapter BENNING CC 3 with up to 40 A-AC / A-DC
- Measurement of the insolation, PV module temperature and ambient temperature by means of the optional insolation and temperature measuring instrument BENNING SUN 2

Further information

http://tms.benning.de/pv1-1

On the Internet, you will find the following additional information directly at the specified link or at www.benning.de (product search):

- Operating manual of the device in several languages
- Further information depending on the device (e. g. brochures, technical reports, FAQs)

1.1 General notes

Target group

This operating manual is intended for the following groups of people:

- Qualified electricians and qualified technical personnel

Required basic knowledge

To understand these operating manual, you will need general knowledge of testing and measuring equipment. Moreover, you will need basic knowledge of the following issues:

- General electrical engineering

Purpose of the operating manual

This operating manual describes the device and provides you information about how to handle it.

Keep this operating manual in a safe place for later use. Read this operating manual before handling the device and follow the instructions.

NOTE

Disclaimer of liability

Please make sure that any person using the device has read and understood the instructions of this operating manual before handling the device and that the instructions are adhered to in all points. Non-observance of this operating manual might result in product damage, property damage and/or personal injury.

Benning assumes no liability for damage and malfunctions resulting from the failure to observe the instructions in this operating manual.

The devices are subject to continuous further development. Benning reserves the right to make changes to the device's design, configuration and technology. The information in this operating manual corresponds to the state of technical knowledge at the time of printing. For this reason, no claims for certain device characteristics can be derived from the contents of this operating manual.

Information in this operating manual can be changed at any time without prior notice. Benning is not obligated to make amendments to this operating manual or to keep it up to date.

Direct any technical questions to Technical Support [page 9].

Trademarks

All trademarks used are the property of their respective owners, even if they are not separately marked as such.

1.2 History

Release number	Amendments
06/2023	• Initial release

Table 1: History

1.3 Service & support

Please contact your specialty retailer or the BENNING Service Center for any repair or service work that might be required.

Technical Support

Please contact our Technical support for technical questions on handling the device.

Phone:	+49 2871 93-555
Fax:	+49 2871 93-6555
E-Mail:	helpdesk@benning.de
Internet:	www.benning.de

Returns management

Easily and conveniently use the BENNING returns portal for a quick and smooth returns processing:

https://www.benning.de/service-de/retourenabwicklung.html

Phone:	+49 2871 93-554
E-Mail:	returns@benning.de

Return address

BENNING Elektrotechnik und Elektronik GmbH & Co. KG
Retourenmanagement
Robert-Bosch-Str. 20
D - 46397 Bocholt

2 Safety

2.1 Warning system

This operating manual contains notes that must be taken into consideration for your personal safety and in order to avoid injuries and damage to property. Warnings about your personal safety and to prevent personal injuries are marked with a warning triangle. Warnings on sole prevention of material damage are shown without a warning triangle. The warnings are shown in descending order depending on the hazard level as follows.



⚠ DANGER

Extremely dangerous situation for humans

If you do not pay attention to this warning, irreversible or deadly injuries will occur.



⚠ WARNING

Hazard to humans

If you do not pay attention to this warning, irreversible or deadly injuries could occur.



⚠ CAUTION

Minor hazard to humans

If you do not pay attention to this warning, minor or moderate injuries could occur.



NOTICE

Danger to property, not to persons

If you do not pay attention to this warning, material damage could occur.

If multiple hazard levels occur, the warning for the highest respective hazard level will be used. In addition, a warning about personal injuries can also include a warning about material damage.

2.2 Standards applied

The device has been built and tested in compliance with the following standards and has left the factory in perfectly safe condition.

- IEC / DIN EN 61010-1 (VDE 0411-1)
- IEC / DIN EN 61557-1 (VDE 0413-1)
- IEC / DIN EN 61557-2 (VDE 0413-2)
- IEC / DIN EN 61557-4 (VDE 0413-4)
- IEC / DIN EN 61557-10 (VDE 0413-10)

2.3 Symbols used

Symbols on the device

Symbol	Meaning
	Please observe the information provided in this operating manual in order to avoid dangers.
	Warning of electrical danger! Please observe the information provided in this operating manual in order to avoid dangers.
CAT I	Measurement category I is applicable to testing and measuring circuits which have no direct connection to the mains.
CAT II	Measuring category II is applicable to testing and measuring circuits which are directly connected to user connections (e. g. sockets) of the low-voltage mains installation.
CAT III	Measuring category III is applicable to testing and measuring circuits connected to the distribution circuit of the low-voltage mains installation of a building.
CAT IV	Measuring category IV is applicable to testing and measuring circuits connected to the feeding point of the low-voltage mains installation of a building.
	The device complies with EU directives.
	The device complies with directives applicable in Great Britain.
	At the end of product life, dispose of the unserviceable device via appropriate collecting facilities provided in your community.
	The device is provided with protective insulation (protection class II).
	Please observe the operating manual.
	This symbol indicates the inserted batteries.
	This symbol indicates a built-in fuse.
	(DC) direct voltage or direct current
	(AC) alternating voltage or alternating current
	Earth (voltage to earth)

Table 2: Symbols on the device

Symbols used in the operating manual

Symbol	Meaning
	General warning
	Warning of electric voltage!

Table 3: Symbols used in the operating manual

2.4 Intended use

Only use the device within the framework of the corresponding technical data. Any operating conditions that deviate from this shall be considered as improper use. Solely the user of the device shall be liable for any resulting damage.

Please note the following:

- In case of improper use, the liability and warranty claims become void. Solely the user of the device shall be liable for any damage resulting from improper use. Uses not complying with the intended use include e. g.:
  - Use of components, accessories, spare or replacement parts that have not been released and approved for the respective application by Benning
  - Non-observance, manipulation, changes or misuse of the operating manual or the instructions and notes contained therein
  - Any form of misuse of the device
  - Any use other than or beyond that described in this operating manual
- Warranty and liability claims are generally excluded if the damage is the result of force majeure.
- If any prescribed services are not performed regularly or not on time, according to the manufacturer's specifications during the warranty period, a decision about a warranty claim can only be made once the findings are available.

Direct any questions to Technical Support [page 9].

Using the device

Please observe the following basic obligations when using the device:

- Before carrying out tests and measurements, disconnect all poles of the PV generator from the PV inverter. The PV generator must be isolated from the electric power supply! Neither the positive nor the negative pole of the PV generator must be earthed!
- Make sure that all switching and disconnecting devices are open and all PV strings are insulated from each other.
- Please observe that the PV generator must not exceed the maximum open-circuit voltage of 1 000 V, the maximum short-circuit current of 15 A and the maximum DC power ($P = V_{OC} \times I_{SC}$) of 10 kW.
- Carry out the tests and measurements only on individual PV strings. Please observe that the short-circuit currents (I_{SC}) of PV strings connected in parallel add up and might additionally increase due to existing capacitances of the PV generator.
- Make sure that no power optimisers are installed in the PV generator. In the event of a short-circuit, power optimisers might generate transient current peaks that significantly exceed the specified short-circuit current (I_{SC}) of the PV generator.
- The device may only be used in a technically perfect and safe condition. Always check the device for damages before using it.
- The personnel must be qualified for the respective task.
- Observe relevant regulations on occupational safety and health as well as those on environmental protection.
- The device may only be used in dry environments.
- Do not use the device in potentially explosive environments.
- Use suitable (approved) safety measuring lines.
- In order to prevent any danger due to incorrect measurements, replace discharged batteries immediately.
- In order to prevent any danger, replace a defective fuse immediately.

- Please observe that the device is not designed for continuous operation. The useful life of the device is limited by software and via temperature monitoring. As soon as the internal operating temperature has reached the maximum value, the function of the device will be restricted in order to allow the device to cool down.
- Disconnect the device from the PV generator immediately after finishing the test or measurement.
- Use the 4 mm test sockets only in electric circuits up to overvoltage category CAT III with a conductor for a maximum of 300 V to earth. Before measurements in electric circuits of overvoltage category CAT III, attach the enclosed protective caps onto the contact tips.
- Do not touch any metal parts of the test object during tests and measurements.
- If you want to use the device to prove the presence of a dangerous voltage, test the device before and after this measurement on a known voltage source or test equipment.



⚠ WARNING

Dangerous voltage

Danger to life or serious injury is possible due to contact with high electric voltage in case of incorrect operation.

- Do not touch the bare measuring probe tips of the safety measuring lines or the bare contacts of the optional alligator clips, Only touch the safety measuring lines in the area intended for your hands.
- Please note that dangerous testing voltages might be present at the device during insulating resistance measurement. These might also be applied to the measuring circuit if safety measuring lines are contacted.
- Connect the safety measuring lines to the correspondingly marked measuring jacks of the device and check them for tight fit.
- Only use approved safety measuring lines.
- Attach the protective caps to the contact tips of the safety measuring lines (circuits of overvoltage category CAT III or IV).
- When disconnecting the measuring circuit, first remove the live safety measuring line (phase) and then the neutral safety measuring line from the measuring point.



⚠ WARNING

Opening the device

Danger to life or serious injury is possible due to contact with high electric voltage when opening the device. The device might get damaged.

- Make sure that the device is free of voltage before opening the battery compartment.
- Do not open the device (except for the battery compartment).
- Please contact your specialty retailer or the returns management for any repairs [page 9].

Securing the device

If the device is not in a technically perfect and operationally safe condition, safe operation is no longer guaranteed. Make sure that the following measures are taken:

- Switch off the device.
- Remove the device from the measuring point.
- Secure the device against unintentional operation.

The following characteristics indicate that safe operation is no longer guaranteed:

- The device (housing or safety measuring lines) shows visible damage or is damp/wet.
- The insulation of the safety measuring lines is damaged.
- The device does not work properly in compliance with regulations (e. g. errors during measurements).
- The device shows recognisable consequences of prolonged storage under inadmissible conditions.
- The device shows recognisable consequences of extraordinary stress due to transport.

2.5 Special types of risks



⚠ DANGER

Bare conductors or main line carriers

Danger to life or serious injury is possible due to contact with high electric voltage when working with bare conductors or main line carriers.

- Please observe relevant regulations on occupational safety and health.
- If necessary, use appropriate protective equipment.



⚠ WARNING

Dangerous voltage

Danger to life or serious injury is possible due to contact with high electric voltage when working on live components or equipment. Even low voltages from 30 V-AC and 60 V-DC on can be dangerous to human life!

- Please observe relevant regulations on occupational safety and health.
- If necessary, use appropriate protective equipment.

3 Scope of delivery

The scope of delivery of the device includes the following components:

- 1 x photovoltaic tester BENNING PV 1-1+ (item no: 05042101)
- 1 x carrying strap
- 1 x transport and storage case
- 2 x safety measuring lines with probe tip (l = 1.2 m) (red / black)
- 2 x alligator clips (red / black)
- 2 x safety measuring lines for MC4 connector (red / black)
- 2 x safety measuring lines for “Sunclix” connector (red / black)
- 1 x USB connecting cable (USB-A plug to USB Micro-B plug)
- 6 x 1.5 V batteries of type AA (IEC LR6)
- 1 x fuse (F 500 mA, 1 000 V, 10 kA, item no: 749771, integrated into the device for initial assembly)
- 1 x quick reference guide

Optional accessories

- Current clamp adapter BENNING CC 3 (item no.: 044038)

  AC range: 0.2 … 300 A

  DC range: 0.2 … 300 A
- Insolation and temperature measuring instrument BENNING SUN 2 (item no.: 050420)

  Insolation measuring range: 100 … 1 250 W/m²

  Temperature measuring range: -30 ... 125 °C
- Temperature sensor with suction cup for BENNING SUN 2 for attachment to the rear of the PV module (item no.: 050424)
- PV module holder for BENNING SUN 2 for safe attachment to the PV module (item no.: 050425)
- 40 m measuring lines BENNING TA 5 (item no.: 044039)

  Connection to Ø 4 mm safety test socket / plug, l = 40 m, with rewinder and wrist strap
- Test badges “next test”, 300 pieces (item no.: 756212)

4 Device description

4.1 Device structure

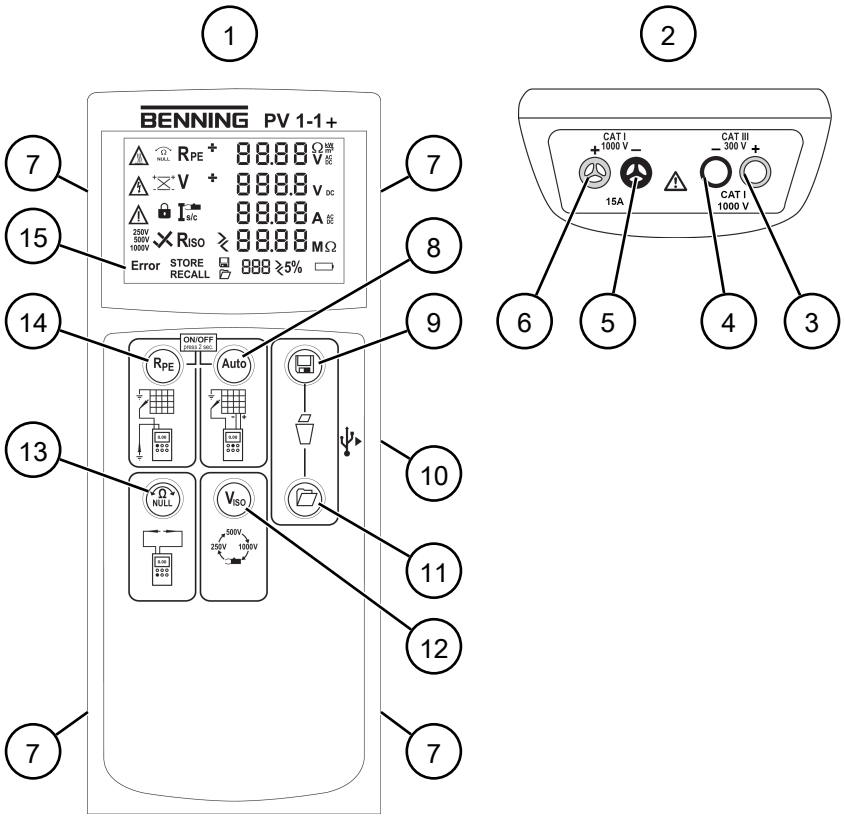

Figure 1: BENNING PV 1-1+ device structure

1	Front view of the device	2	Device top
3	Red 4 mm test socket “+”	4	Black 4 mm test socket “-”
5	Black PV test socket “-”	6	Red PV test socket “+”
7	Bracket für carrying strap	8	“Auto” key
9	“Save” key	10	USB Micro-B interface
11	“Measured value memory” key	12	“V_{ISO}” key
13	“NULL balance” key	14	“R_{PE}” key
15	Digital display		

Rear panel of the device

- Battery compartment
- Notes and information about the device
- Serial number (label, on inside of battery compartment cover)

Digital display

The digital display is divided into different sections:

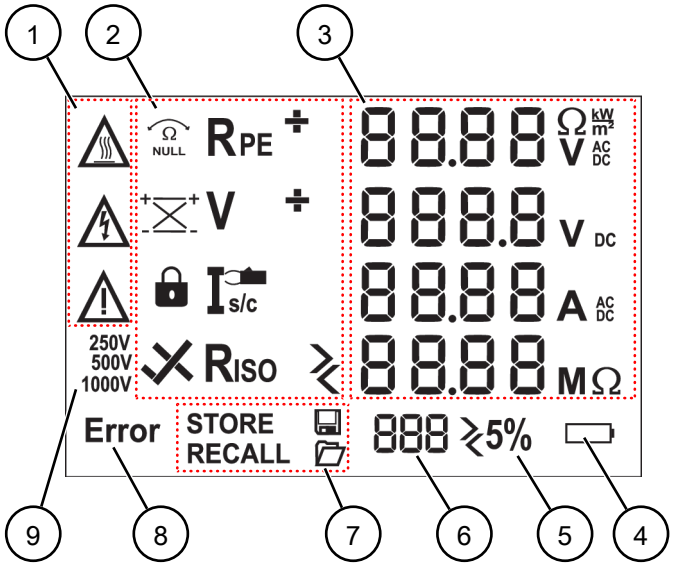

Figure 2: Digital display

1	Warning symbols	2	Display of measuring functions
3	Display of measured values and units	4	Battery status
5	U/I deviation	6	Storage location of the measurement in the measured value memory
7	Display of memory functions	8	Indication that there is an error message
9	Insulation test voltage		

Description of symbols (warnings):

Symbol	Meaning
	Warning of hot surfaces! Immediately disconnect the device from the PV generator when the symbol is displayed and do not reconnect it until the symbol has disappeared.
	Warning of dangerous voltage! High-voltage control indicator: Flashes when the device detects the presence of a dangerous voltage on the PV safety measuring lines (>30 V).
	Please observe the information provided in this operating manual in order to avoid dangers [page 24].

Table 4: Symbols (warnings) on the digital display

Description of the measuring functions:

Symbol	Designation	Function
	Null balance	Null balance enabled
R_{PE}	Protective conductor resistance measurement	Protective conductor resistance measurement enabled
+/-	Polarity indication	Indicates reverse polarity of the DC voltage at the 4 mm test sockets. For AC voltage, “+” and “-” are displayed alternately.
	Polarity indication PV	Indicates reverse polarity of the DC voltage at the PV test sockets.
V	Voltage measurement	Voltage measurement enabled
	R_{PE} LOCK	Continuous protective conductor resistance measurement enabled
	Current clamp measurement	Current clamp measurement enabled
	Positive result of insulating resistance measurement	The measured insulating resistance is within the preset limits.
	Negative result of insulating resistance measurement	The measured insulating resistance is outside the preset limits.
5 %	5 % deviation	Indicates a deviation of the displayed measured value (open-circuit voltage or short-circuit current) by more than 5 % from the average value of the stored measured values.
> / <	Outside measuring range	The measured value is outside the measuring range [▸ page 22].

Table 5: Symbols (measuring functions) on the digital display

4.2 Functions

Switching the device ON/OFF

Press the “R_{PE}“ and “Auto” keys to switch the device on or off (press and hold both keys simultaneously for approx. 2 seconds). The device confirms each switch-on or switch-off with an acoustic signal.

The device switches off automatically after the set switch-off time (APO, Auto-Power-Off), factory setting: 1 minute) [▸ page 26].

Date and time

The device is equipped with an integrated real-time clock which automatically adds a date and time stamp to each storage processes or storage location.

You can set the date and time manually [▸ page 26] or the values of the BENNING SUN 2 are optionally taken over automatically.

4.2.1 Measured value memory

The device can store up to 200 display indications. Depending on the measurement performed, the protective conductor resistance, the open-circuit voltage, the short-circuit current, the insulating resistance with testing voltage or the measured AC / DC current are stored for each memory location with a date and time stamp.

Storing measured values

Press the “Save” key to store the displayed measured values to the first free storage location. Successful storage will be confirmed by the “STORE” symbol on the digital display.

Calling measured values

Press the “Measured value memory” key to recall the stored measured values with the corresponding storage location number. The “RECALL” symbol appears on the digital display and the storage location number is displayed.

Press the “Measured value memory” key again to switch to the next storage location and press the “Save” key to switch to the previous storage location.

Deleting the measured value memory

Press the “Save” key and the “Measured value memory” key simultaneously to delete the entire measured value memory.

Calling the average value

The device determines the average values of the open-circuit voltage and the short-circuit current of the entire measured value memory and stores them in storage location 0.

Switch to storage location 0 to call the average values. The “RECALL” symbol appears on the digital display and the average values of the open-circuit voltage and the short-circuit current are displayed.

5 % deviation from the average value

In case the displayed measured value deviates by 5 % from the average value, the “5 % deviation” symbol flashes.

4.2.2 Installing the data logger and driver

To read the measured values of the device on a PC via the USB interface, you must install the hardware driver and the “BENNING SOLAR Datalogger” software on the PC once.

Requirements

- PC with USB-A port and sufficient storage space
- Download the hardware driver and the “BENNING SOLAR Datalogger” software from the product page of the device

  http://tms.benning.de/pv1-1
- Remove any connected safety measuring lines.

Procedure

1. Install the downloaded hardware driver on your PC.
2. Install the downloaded “BENNING SOLAR Datalogger” software on your PC.
3. Connect the device to your PC using the USB connecting cable.

   The hardware driver is installed automatically on a free COM port and confirms that the new hardware can be used.

4.2.3 Reading out measured values via the USB interface

You can read out the measured values of the device on a PC via the USB interface and store them as a CSV or TXT file.

Requirements

- PC with USB-A port and sufficient storage space
- Installed data logger and driver
- Remove any connected safety measuring lines.

Procedure

1. Connect the device to your PC using the USB connecting cable.
2. Start the “BENNING SOLAR Datalogger” program.
3. Go to “Tools”, click “Refresh Ports” and select the corresponding COM port.

   The COM port used can be viewed by means of the Device Manager of your system.
4. Click “Download”.
5. Press and hold the “Measured value memory” key for approx. 2 seconds until the download takes place and the entire measured value memory is read out.
6. Store the read-out measured values as a CSV or TXT file.
7. To open the measurement series, e. g. via a spreadsheet programme, click “Open”.

4.2.4 Error messages

Code	Meaning	Remedial measure
FUSE	The built-in fuse is defective.	Replace the fuse of the device [page 41].
HOt	The electronic components of the device have reached the maximum admissible temperature. The functioning of the device is restricted until the device has cooled down.	Disconnect the device from the object to be measured and let it cool down.
HiSC	The DC short-circuit current has exceeded the maximum value of 15 A. Measurement has been cancelled.	Carry out the measurement within the admissible measuring range.
HiOC	The DC open-circuit voltage has exceeded the maximum value of 1 000 V. Measurement has been cancelled.	
CAL	The device is defective.	Please return the device to an authorised service center [page 9].
Er 1, 2 etc.		
HOtF		
FEt		
rL 1, 2, 3 or 4		
EEPro		Switch the device off an on again. If the error persists, return the device to an authorised service center [page 9].
rF		

Table 6: Error messages

4.2.5 BENNING SUN 2

The insolation and temperature measuring instrument BENNING SUN 2 is an optional accessory and can send the following measured values to the device via radio transmission:

- Insolation (W/m²)
- PV module temperature
- Ambient temperature
- Date and time stamp

Indications on the digital display of the device

- Within radio range, the measured insolation value (W/m²) is displayed.
- Outside the radio range, the “W/m²” flashes.
- Outside the insolation measuring range, the “- - -” symbol is displayed.

Synchronising the date and time

If the device is in radio communication with the BENNING SUN 2 and detects a deviation of more than 1 minute for the date and time, the device will automatically adopt the date and time of the BENNING SUN 2 after approx. 10 seconds.

BENNING SUN 2 (primary) → BENNING PV 1-1 (secondary)

4.3 Measuring ranges

Measuring accuracy

The measuring accuracy is specified as the sum of the following:

- Relative part of the measured value
- Number of digits (counting steps of the last digit)

The specified measuring accuracy applies at a temperature of 24 °C ±6 °C and a relative air humidity lower than 80 %.

4.3.1 Resistance ranges

Protective conductor resistance R_{PE}

Measuring range	Resolution	Measuring accuracy
0.05 … 199 Ω	Max. 0.01 Ω	±(2 % + 2 digits)

Table 7: Measuring range for measuring the protective conductor resistance R_{PE}

- Testing current: >200 mA (2 Ω)
- Open-circuit voltage: >4 V
- Number of periodic inspections (IEC 61557-2): approx. 4 000

Insulating resistance R_{ISO}

Measuring range	Resolution	Measuring accuracy
0.2 ... 100 MΩ	Max. 0.01 MΩ	±(5 % + 5 digits)
101 ... 199 MΩ	1 MΩ	±(10 % + 5 digits)

Table 8: Measuring range for measuring the insulating resistance R_{ISO}

- Testing voltage: 250, 500 or 1 000 V-DC (positive deviation up to 20 %)
- Testing current: >1 mA, <2 mA in case of a short-circuit
- Number of periodic inspections (IEC 61557-2): approx. 2 000

V_{ISO}	Limit of the insulating resistance
250 V	0.5 MΩ
500 V	1.0 MΩ
1 000 V	1.0 MΩ

Table 9: Preset limits of the insulating resistance

4.3.2 Voltage ranges

Open-circuit voltage V_{OC} of the PV module or PV string

Measuring range	Resolution	Measuring accuracy
5.0 … 1 000 V	0.1 V	±(0.5 % + 2 digits)

Table 10: Measuring range for measuring the open-circuit voltage V_{OC} of the PV module or PV string

Voltage via 4 mm test sockets

Measuring range	Resolution	Measuring accuracy (AC: 50 … 60 Hz, DC)
30 … 440 V-AC / V-DC	1 V	±(5 % + 2 digits)

Table 11: Measuring range for measuring the voltage via the 4 mm test sockets

4.3.3 Current ranges

Short-circuit current I_{SC} of the PV module or PV string

Measuring range	Resolution	Measuring accuracy
0.5 … 14.99 A	0.01 A	±(1 % + 2 digits)

Table 12: Measuring range for measuring the short-circuit current I_{SC} of the PV module or PV string

Current via current clamp adapter BENNING CC 3 (optional)

Measuring range	Resolution	Measuring accuracy (AC: 50 … 60 Hz, DC)
0.1 … 40 A-AC / A-DC	0.1 A	±(5 % + 2 digits)

Table 13: Measuring range for measuring the current using the current clamp adapter BENNING CC 3 (optional)

5 Operation

The device enables you to carry out various tests and measurements.

5.1 Requirements for tests and measurements

Please observe the following basic requirements for tests and measurements:

- Before carrying out tests and measurements, disconnect all poles of the PV generator from the PV inverter. The PV generator must be isolated from the electric power supply! Neither the positive nor the negative pole of the PV generator must be earthed!
- Make sure that all switching and disconnecting devices are open and all PV strings are insulated from each other.
- Please observe that the PV generator must not exceed the maximum open-circuit voltage of 1 000 V, the maximum short-circuit current of 15 A and the maximum DC power ($P = V_{OC} \times I_{SC}$) of 10 kW.
- Carry out the tests and measurements only on individual PV strings.
- No power optimisers are installed in the PV generator.
- Only connect the device according to the connection diagram of the associated test or measurement.
- Use the PV test sockets only for connection to a PV module / PV string.
- Only use approved safety measuring lines [page 25].
- Disconnect any safety measuring lines not required for the respective test or measurement from the device.
- Please consider sources of interference that might be present. Strong sources of interference in the vicinity of the device might involve unstable readings and measuring errors.
- Disconnect the device from the test object immediately after finishing the test or measurement as well as during the cool-down phase.



⚠ DANGER

Maximum admissible voltage

Danger to life or serious injury is possible due to contact with high electric voltage.

- Use the device only in electric circuits up to overvoltage category CAT III with a conductor for a maximum of 300 V (4 mm test sockets) or up to overvoltage category CAT I with a conductor for a maximum of 1000 V to earth (PV test sockets).

5.2 Connecting the safety measuring lines

For certain tests and measurements, it is necessary to connect the safety measuring lines to the device.

Requirements

- Please observe the requirements for measuring [page 24].
- Safety measuring lines

  The safety measuring lines must be approved for the device (e. g. safety measuring lines included in the scope of delivery) and be in a technically perfect and operationally safe condition.
  - Check the specifications regarding nominal voltage and nominal current.
  - Check the insulation of the safety measuring lines.
  - Check the safety measuring lines for continuity.
  - Replace defective safety measuring lines.
- Protective caps (depending on the overvoltage category)
- During tests and measurements, only touch the safety measuring lines in the area intended for your hands.



⚠ WARNING

Dangerous voltage

Danger to life or serious injury is possible due to contact with high electric voltage in case of incorrect operation.

- Do not touch the bare measuring probe tips of the safety measuring lines or the bare contacts of the optional alligator clips, Only touch the safety measuring lines in the area intended for your hands.
- Please note that dangerous testing voltages might be present at the device during insulating resistance measurement. These might also be applied to the measuring circuit if safety measuring lines are contacted.
- Connect the safety measuring lines to the correspondingly marked measuring jacks of the device and check them for tight fit.
- Only use approved safety measuring lines.
- Attach the protective caps to the contact tips of the safety measuring lines (circuits of overvoltage category CAT III or IV).
- When disconnecting the measuring circuit, first remove the live safety measuring line (phase) and then the neutral safety measuring line from the measuring point.

Procedure for 4 mm safety measuring lines

1. Connect the black safety measuring line to the black 4 mm “-” jack of the device.
2. Connect the red safety measuring line to the red 4 mm “+” jack of the device.
3. Measurements or tests in electric circuits of overvoltage category CAT III: Attach the protective caps to the contact tips of the safety measuring lines.

Procedure for PV safety measuring lines

1. Connect the black PV safety measuring line to the black PV test socket of the device.
2. Connect the red PV safety measuring line to the red PV test socket of the device.

5.3 Configuration

5.3.1 Setting the “Auto-Power-Off” (APO) function

Procedure

1. Switch off the device.
2. Press and hold the “NULL balance” key during the entire setting process and press the two keys “R_{PE}“ and “Auto” simultaneously.

   The digital display shows “OFF” in the first line and the switch-off time (in minutes) in the second line.
3. To increase the switch-off time, press the “V_{ISO}“ key (1 ... 10 min).
4. Release the “NULL balance” key to save the settings.

5.3.2 Setting the date and the time

Procedure

1. Switch off the device.
2. Press and hold the “measured value memory” key and press the two keys “R_{PE}“ and “Auto” simultaneously.

   The date and time format is displayed as follows:
   - MM.DD (month: 1 ... 12, day: 1 ... 31)
   - YYYY (year)
   - HH.mm (hours: 0 ... 23, minutes: 0 ... 59)
   - SS (seconds: 0 ... 59)
3. Press the “R_{PE}” key to select a date or time field.

   As soon as the field is flashing, the value for that field can be set.
4. Press the “Save” key to increase the value or the “Measured value memory” key to decrease the value.

   Every change resets the field for the seconds to zero.
5. To save the entered values, switch off the device.

5.3.3 Null balancing of the 4 mm safety measuring lines

Before measuring the protective conductor resistance (R_{PE}) with new safety measuring lines, carry out a null balance.

Requirements

- Approved safety measuring lines
- Please observe the requirements for measuring [page 24].

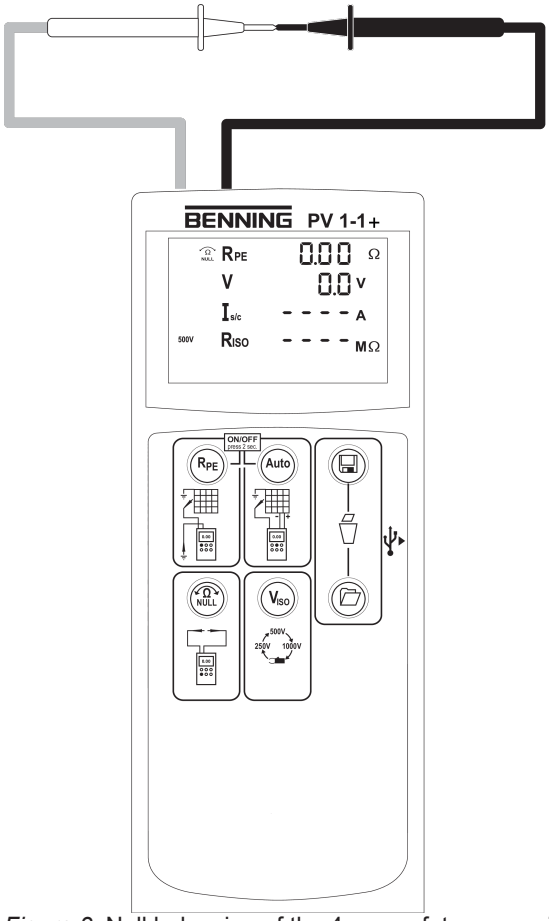

Figure 3: Null balancing of the 4 mm safety measuring lines

Procedure

1. Connect the 4 mm safety measuring lines to the device [page 25].
2. Short-circuit the two measuring probes of the 4 mm safety measuring lines by contacting them and start the null balance by pressing the “Null balance” key until the “Null balance” symbol is shown on the digital display.

   Please note that measuring line resistances of up to 10 Ω can be compensated for.

5.4 Protective conductor resistance measurement

Requirements

- Please observe the requirements for measuring [▷ page 24].
- Approved safety measuring lines
- Corresponding measuring ranges [▷ page 22]
- In an error-free condition of the PV module / PV string, no voltage is applied to the measuring points.

  If a voltage higher than 30 V is applied to the test probes during measurement, the measurement will be blocked. If a voltage lower than 30 V is applied, a low-impedance voltage source might trip the built-in fuse of the device [▷ page 41].

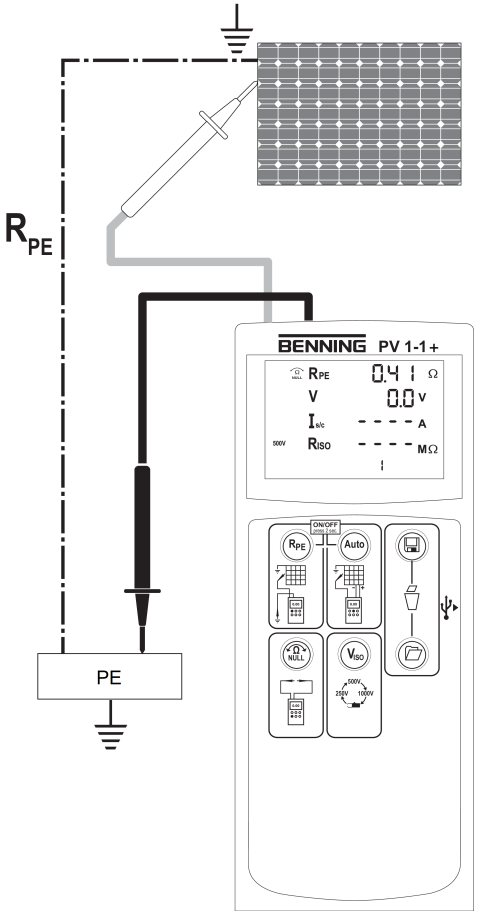

Figure 4: Protective conductor resistance

Procedure for single measurement

1. Connect the 4 mm safety measuring lines to the device [▷ page 25].
2. Only for new safety measuring lines: Please carry out a null balance [▷ page 27].
3. Bring the 4 mm safety measuring lines into contact with the measuring points.
4. Press the “R_{PE}” key and read the measured value on the digital display.
5. Press the “Save” key to store the measured value to the next free storage location available.

Procedure for continuous measurement

1. Connect the 4 mm safety measuring lines to the device [page 25].
2. Only for new safety measuring lines: Please carry out a null balance [page 27].
3. Bring the 4 mm safety measuring lines into contact with the measuring points.
4. Press and hold the “R_{PE}“ key until the “R_{PE} LOCK” symbol is displayed.
5. The measured protective conductor resistance R_{PE} is shown continuously on the digital display.
6. To stop the continuous measurement, press the “R_{PE}“ key.

5.5 Automatic PV measurement

During automatic PV measurement, the following measurements are carried out:

- Measurement of the PV open-circuit voltage V_{OC}
- Measurement of the PV short-circuit current I_{SC}
- Measurement of the insulating resistance R_{ISO}

  During the insulating resistance measurement, the PV generator is shorted. Measurement is made between the red 4 mm test socket “+” and the shorted PV test sockets.

Requirements

- Please observe the requirements for measuring [page 24].
- The DC polarity is correct and the DC voltage is in the range between 5 and 1 000 V.
- Corresponding measuring ranges [page 22]
- Stable insolation conditions
- Approved safety measuring lines

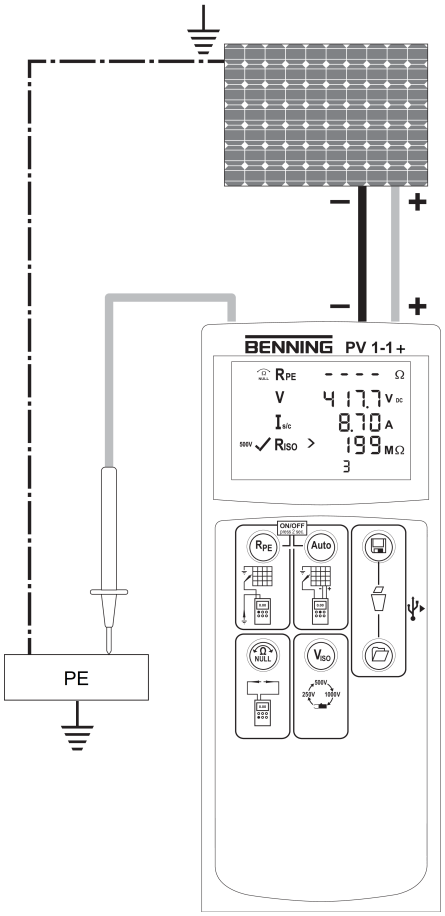

Figure 5: Automatic PV measurement

Procedure

1. Connect the PV safety measuring lines to the device [page 25].
2. Bring the PV safety measuring lines into contact with the individual PV module or the individual PV string.

   Make sure that the respective safety measuring lines are contacted properly and safely with the PV generator.

   If DC voltage is applied to the PV safety measuring lines, the PV open-circuit voltage will be measured automatically.
3. Connect the red 4 mm safety measuring line to the device [page 25].
4. Bring the red 4 mm safety measuring line into contact with a metal part (frame or mounting system) of the PV generator.

   If the PV generator is properly earthed, you can alternatively measure the insulating resistance against a safe earth connection (e. g. equipotential busbar).

   If the PV generator is not earthed, first measure the insulating resistance against a metal part (frame or mounting system) of the PV generator and then against a safe earth connection (e. g. equipotential busbar).
5. Select the desired insulation test voltage of 250 V-DC, 500 V-DC or 1 000 V-DC. To do this, press the “V_{ISO}“ key until the desired insulation test voltage is shown on the digital display.
6. Start the automatic PV measurement. To do this, press the “Auto” key.

   When the measurement is completed, the measured values will be shown on the digital display for approx. 20 seconds or until a key is pressed.

   If the measured insulating resistance is higher than the preset limits, the “✓” symbol will be shown next to the measured value on the digital display. If the measured value is lower than the limits, the “✗” symbol will be displayed.
7. Press the “Save” key to store the measured value to the next free storage location available.

5.6 DC and AC voltage measurement

You can measure DC voltage and AC voltage via the 4 mm safety measuring lines.

Requirements

- Please observe the requirements for measuring [▷ page 24].
- Approved safety measuring lines
- Corresponding measuring ranges [▷ page 22]

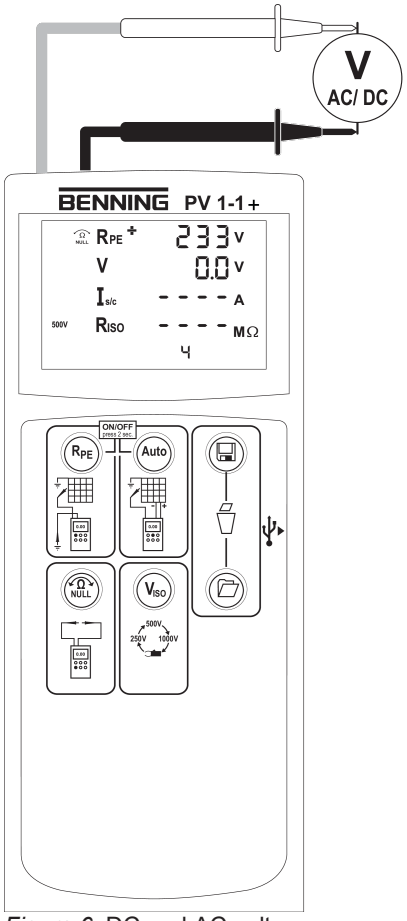

Figure 6: DC and AC voltage measurement

Procedure

1. Connect the 4 mm safety measuring lines to the device [▷ page 25].
2. Bring the 4 mm safety measuring lines into contact with the measuring points and read the measured value on the digital display.
3. Press the “Save” key to store the measured value to the next free storage location available.

5.7 Current measurement using the optional BENNING CC 3

Together with the optional AC/DC current clamp adapter BENNING CC 3, the device can be used for measuring the operating current of a PV system.

Requirements

- BENNING CC 3 (optional accessories)
- Please observe the specifications given in the operating manual of the BENNING CC 3.
- Please observe the requirements for measuring [page 24].
- Approved safety measuring lines
- Corresponding measuring ranges [page 22]

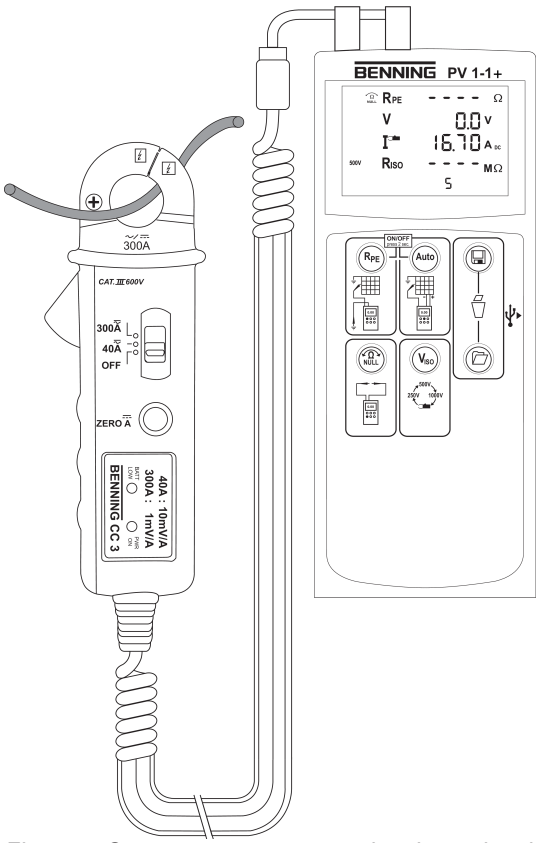

Figure 7: Current measurement using the optional BENNING CC 3

Procedure

1. Connect the BENNING CC 3 to the 4 mm test sockets of the device.
2. Switch on the BENNING CC 3 and select the 40 A range.
3. Switch on the device and press the “V_{ISO}“ key until the symbol for current clamp measurement is displayed.
4. For direct current (DC) measurements, press the “Null balance” key of the BENNING CC 3 until a current value of approx. 0 A is shown on the digital display of the device.
5. Clamp the single-wire live conductor by means of the current clamp adapter and read the measured current value on the digital display.
6. Press the “Save” key to store the measured value to the next free storage location available.

5.8 Measuring several identical PV modules / PV strings

For PV systems with several identical PV modules / PV strings, you can compare the measured open-circuit voltages and short-circuit currents in the measured value memory [page 19].

Requirements

- Please observe the requirements for measuring [page 24].
- The DC polarity is correct and the DC voltage is in the range between 5 and 1 000 V.
- Approved safety measuring lines
- Corresponding measuring ranges [page 22]
- Stable insolation conditions
- Deleted measured value memory [page 19]

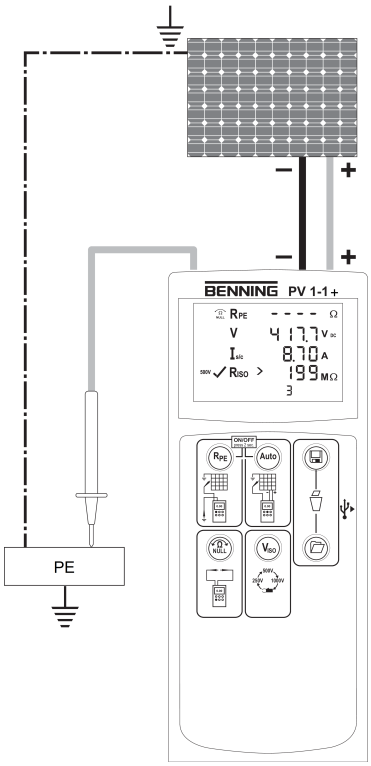

Figure 8: Automatic PV measurement

Procedure

1. Connect the PV safety measuring lines to the device [▷ page 25].
2. Bring the PV safety measuring lines into contact with the first PV string of the PV generator.

   Make sure that the respective safety measuring lines are contacted properly and safely with the PV generator.

   If DC voltage is applied to the PV safety measuring lines, the PV open-circuit voltage will be measured automatically.
3. Connect the red 4 mm safety measuring line to the device [▷ page 25].
4. Bring the red 4 mm safety measuring line into contact with a metal part (frame or mounting system) of the PV generator.

   If the PV generator is properly earthed, you can alternatively measure the insulating resistance against a safe earth connection (e. g. equipotential busbar).

   If the PV generator is not earthed, first measure the insulating resistance against a metal part (frame or mounting system) of the PV generator and then against a safe earth connection (e. g. equipotential busbar).
5. Select the desired insulation test voltage of 250 V-DC, 500 V-DC or 1 000 V-DC. To do this, press the “V_{ISO}“ key until the desired insulation test voltage is shown on the digital display.
6. Start the automatic PV measurement. To do this, press the “Auto” key.
7. Press the “Save” key to store the measured value to the next free storage location available.
8. Repeat this procedure for all identical PV strings.

   After completing the test, you can check in the measured value memory whether the measured values are identical and within the maximum deviation range of 5 %.

5.9 BENNING SUN 2 (optional)

5.9.1 Pairing the device with the BENNING SUN 2

Requirements

- BENNING SUN 2 (optional accessories)
- Please observe the specifications given in the operating manual of the BENNING SUN 2.
- Make sure that there are no electric devices in direct vicinity.

Procedure

1. Switch off both the device and the BENNING SUN 2.
2. Simultaneously press and hold the two keys “Temperature” and “Angle of inclination” of the BENNING SUN 2 as well as the two keys “R_{PE}” and “Auto” of the device for approx. 2 seconds until the two devices are paired.

   The device indicates the successful pairing via an acoustic signal and shows the serial number of the paired BENNING SUN 2 as well as the “W / m²” symbol on the digital display. The pairing remains enabled until the devices are unpaired.

5.9.2 Unpairing the device from the BENNING SUN 2

Requirements

- Paired BENNING SUN 2 (optional accessories) [page 35]

Procedure

1. Switch off the device.
2. Simultaneously press and hold the two keys “R_{PE}” and “Auto” of the device for approx. 10 seconds until the BENNING SUN 2 is unpaired.

   The device indicates the successful unpairing via an acoustic signal and shows the serial number of the previously paired BENNING SUN 2 as well as the “W / m²” symbol on the digital display.

5.9.3 Enabling / disabling the radio transmission of the BENNING SUN 2

Requirements

- Paired BENNING SUN 2 (optional accessories) [page 35]

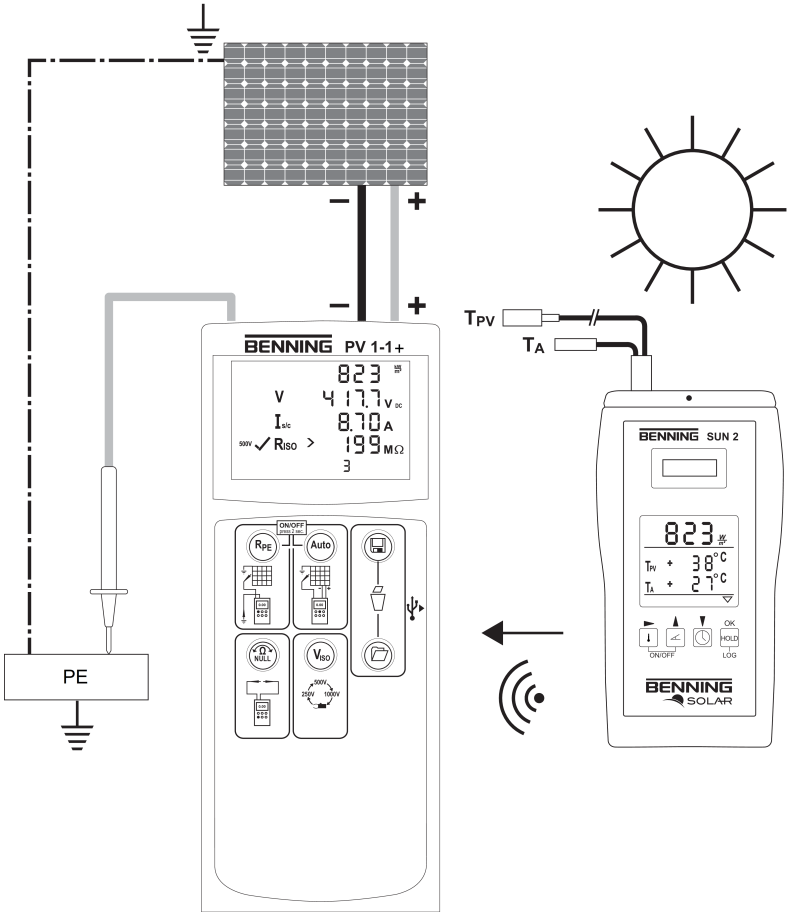

Figure 9: Radio connection to the BENNING SUN 2

Procedure

Simultaneously press and hold the two keys “Temperature” and “HOLD” of the BENNING SUN 2 until the radio transmission is enabled or disabled, respectively.

A flashing triangle on the digital display of the BENNING SUN 2 indicates that the radio transmission is enabled.

6 Maintenance

The battery compartment may be opened for maintenance work. Apart from that, there are no components in the device that you can replace.



⚠ WARNING

Opening the device

Danger to life or serious injury is possible due to contact with high electric voltage when opening the device. The device might get damaged.

- Make sure that the device is free of voltage before opening the battery compartment.
- Do not open the device (except for the battery compartment).
- Please contact your specialty retailer or the returns management for any repairs [page 9].

6.1 Maintenance schedule

The following table provides an overview of all maintenance and servicing work that you must carry out permanently or at regular intervals.

Interval	Measures
Regularly, as needed	• Cleaning the device [page 39]
As needed	• Replacing the batteries [page 40]
Every 12 months	• Calibrating the device [page 41]

Table 14: Maintenance schedule

6.2 Making the device free of voltage

If you want to open the battery compartment for maintenance work, make sure first that the device is free of voltage.

Procedure

1. Remove the device from the measuring point.
2. Disconnect the safety measuring lines from the device.
3. Switch off the device.

6.3 Cleaning the device

Clean the device regularly and as the need arises. Make sure that the battery compartment and the battery contacts are not contaminated by leaking battery electrolyte.

Requirements

- A clean and dry cloth or special cleaning cloth
- Voltage-free device [page 38]



NOTICE

Wrong cleaning agents

Using the wrong cleaning agents can damage the device.

- Do not use any solvents, abrasives or polishing agents.

Procedure

1. Clean the exterior of the device with a clean and dry cloth or a special cleaning cloth.
2. Check the battery compartment. To open and close the battery compartment, follow the procedure given in the chapter “Replacing the batteries” [page 40].
3. In case of electrolyte contamination or white deposits in the area of the battery or the battery compartment, clean the batteries and these areas by means of a clean and dry cloth. Replace the batteries, if necessary [page 40].

6.4 Replacing the batteries

The device is powered by batteries. Replace the batteries as soon as they are discharged.

Requirements

- Discharged batteries inside the device (the battery symbol on the digital display is shown permanently)
- 6 new 1.5 V mignon batteries (AA)
- Voltage-free device [page 38]
- Suitable slotted screwdriver

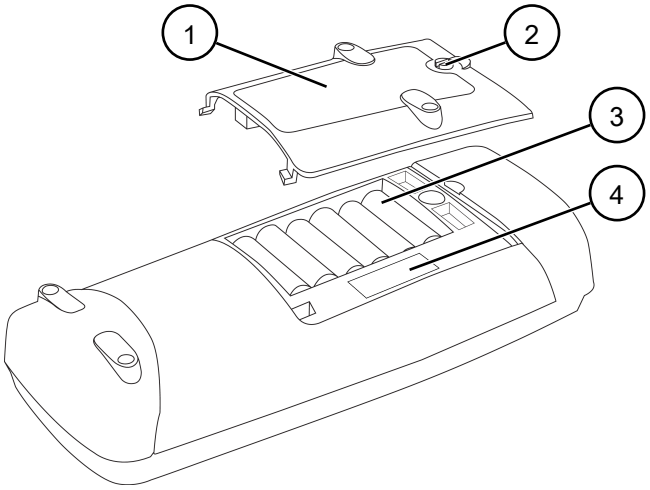

Figure 10: Battery replacement (exemplary)

1	Battery compartment cover	2	Slotted screw for opening the battery compartment cover
3	Batteries	4	Fuse

Procedure

1. Place the device face down (onto an anti-slip surface).
2. Unscrew the screw of the battery compartment cover.
3. Lift the battery compartment cover off the device.
4. Remove the discharged batteries from the battery compartment and dispose of them properly [page 44].
5. Insert the new batteries into the battery compartment observing the correct polarity.
6. Place the battery compartment cover back onto the device and tighten the screw.

6.5 Calibrating the device

Benning guarantees compliance with this technical and accuracy specifications stated in this operating manual for the first 12 months after the delivery date.

To maintain accuracy of the measuring results, make sure that the device is recalibrated in annual intervals by the BENNING Service [page 9].

http://calibration.benning.de

6.6 Replacing the fuse

The device is protected against overload by means of a fuse. Replace the fuse if it is defective.

Requirements

- Defective fuse inside the device

  The error code “FUSE” [page 21] indicates a defective fuse.
- Open battery compartment cover (for this, see the procedure for replacing the batteries [page 40])
- New fuse of the type F 500 mA, 1 000 V, 1 kA or better, d = 6.3 mm, l = 32 mm, (e. g. item no.: 749771)
- Voltage-free device [page 38]
- Suitable slotted screwdriver
- Please observe the figure for battery replacement [page 40].

Procedure

1. Laterally lift one end of the defective fuse off the fuse holder by means of a slotted screwdriver.
2. Remove the defective fuse from the fuse holder and dispose of it properly [page 44].
3. Insert the new fuse and position it centrally in the fuse holder.
4. Place the battery compartment cover back onto the device and tighten the screw.

7 Technical data

Protection class	II (double or reinforced insulation)
Contamination level	2
Protection category (DIN VDE 0470-1, IEC / EN 60529)	IP 40 1st digit: 4 = protection against access to dangerous parts and protection against solid impurities (diameter >1.0 mm) 2nd digit: 0 = no protection against water
Overvoltage category	• PV test sockets: CAT I 1 000 V to earth • 4 mm test sockets: CAT I 1 000 V, CAT III 300 V to earth
Housing dimensions (length x width x height)	270 mm x 115 mm x 80 mm
Weight (batteries included)	1.2 kg
Battery life (alkaline batteries)	Approx. 3 000 automatic measurements at an insulating voltage of 500 V
Electromagnetic compatibility (EMC)	IEC / DIN EN 61326
4 mm safety measuring lines	
Standard	IEC / DIN EN 61010-031 (VDE 0411-031)
Overvoltage category (only applies to the safety measuring lines, additionally observe the limitations of the device)	• With attachable protective cap: – CAT III 1 000 V to earth – CAT IV 600 V to earth • Without attachable protective cap: – CAT II 1 000 V to earth
Protection class	II (double or reinforced insulation)
Contamination level	2
Max. rated current	10 A
Length	1.2 m
PV safety measuring lines	
Overvoltage category (only applies to the safety measuring lines, additionally observe the limitations of the device)	• CAT I 1 000 V to earth
Protection class	II (double or reinforced insulation)
Contamination level	2
Max. rated current	15 A
Length	0.5 m
Operation	
Operating duration	Short-term use (no continuous operation)
Max. barometric altitude	2 000 m
Operating temperature	0 … 40 °C (do not permanently expose the device to sunlight)
Max. relative air humidity	80 % RH (0 … 30 °C), 75 % RH (31 … 40 °C)
Operating conditions	To be used inside or outside buildings, both in dry environments

Storage (remove the batteries from the device)	
Ambient temperature	-25 … 65 °C (do not permanently expose the device to sunlight)
Max. relative air humidity	90 % RH

Table 15: Technical data

8 Disposal and environmental protection

	At the end of product life, dispose of the unserviceable device and the batteries via appropriate collecting facilities provided in your community.

Index

A

Accessories 15
AC-Voltage 32
APO 26
Auto-Power-Off 26
Average value
  Calling the average value 19

B

Basic knowledge 7
Battery
  Replacing 40
BENNING PV 1-1+ 7
BENNING SUN 2 21
  Pairing 35
  Radio transmission 37
  Unpairing 36

C

Calibrating 41
Cleaning 39
Conductor resistance measurement
  Continuous measurement 29
  Single measurement 28
Copyright 2
Current measurement
  BENNING CC 3 33

D

Data logger
  Installing the data logger 20
Date 18
  Settings 26
  Synchronisation 21
DC-Voltage 32
Device
  Calibrating 41
  Cleaning 39
  Securing 14
Device structure 16
Digital display 17
  Symbols (Measuring functions) 18
  Symbols (Warnings) 17
Disclaimer 2, 12
Disposal 44
Documentation 2

E

Environmental protection 44
Error messages 21

F

Further information 7
Fuse
  Replacing 41

H

Hardware driver
  Installing the hardware driver 20
History 8
Holder of rights 2

I

Intended use 12

L

Limits
  Insulating resistance 22

M

Maintenance 38
Maintenance schedule 38
Manufacturer 2
Measured value
  5 % deviation 19
Measured value memory 19
  5 % deviation 19
  Deleting the measured value memory 19
Measured values
  Calling measured values 19
  Reading out via USB 20
  Storing measured values 19
Measurement
  Requirements 24
Measuring accuracy 22
Measuring range
  Current 23
  Insulating resistance 22
  Open-circuit voltage 23
  Protective conductor resistance 22
  Short-circuit current 23
  Voltage 23

N

Non-discrimination 2
Null balancing 27

O

Operation 24

P

Purpose of the operating manual 8
PV 1-1+ 7
PV measurement
  Automatic 30
  PV modules 34
  PV strings 34

R

Rear panel of the device 16
Return address 9
Returns management 9

S

Safety measuring lines
  Connecting 25
Scope of delivery 15
Securing 14
Service & Support
  Technical Support 9
Standards applied 10
SUN 2 21
  Pairing 35
  Radio transmission 37
  Unpairing 36
Switching off 18
Switching on 18
Symbols
  Device 11
  Operating manual 11

T

Target group 7
Technical data 42
Technical Support 9
Test
  Requirements 24
Time 18
  Settings 26
  Synchronisation 21
Trademarks 8

V

Voltage-free 38

W

Warning system 10
Warranty 12

The text and illustrations correspond to the state of technology at the time of printing. Subject to technical changes. No liability accepted for printing errors.

BENNING Elektrotechnik und Elektronik GmbH & Co. KG
Münsterstraße 135 - 137
D - 46397 Bocholt
Phone: +49 2871 93-0 Fax: +49 2871 93-429
Internet: www.benning.de E-Mail: duspol@benning.de