# SIMPO HV Quick Start Guide_V2.2(EN)

## Safety Precaution

- **Important**: Installers and users are obliged to familiarise themselves with this manual.
- **Danger:** Power Cables and plugs have high voltage from the battery, be careful when wiring.
- **Important:** Ensure that a fire extinguisher is in place prior to installation and use.
- **Warning:** Installation and operation must be carried out by qualified personnel and the system must be installed in restricted access areas.
- **Caution:** The battery module is with certain weight. Install with the help of tools if necessary.

## Contents in SIMPO HV Package

**Battery Package:**




**BMS Package:**

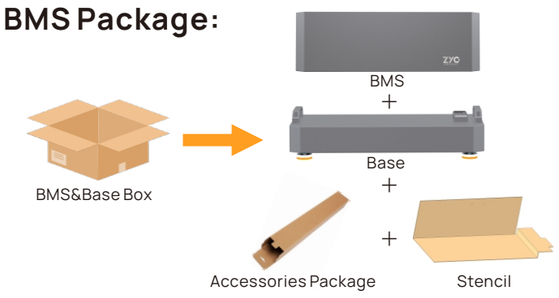


**Accessories Included:**



A×4
Fixing part



B×4
Fixing part



C×2
Power Cable fixing part



D×1
DC- Terminal



E×1
DC- Connector



F×1
DC+ Connector



G×1
DC+ Terminal

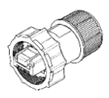

H×3
Rj45 Connectors



I×4
Bolt M5*10



J×8
Slotted step bolt
M5



K×8
Expansion Screw



L×1
Assembly Tool

## Extra Accessories

Extra accessories are not included in the accessory box but necessary for system build up.



DC Cables
(⩾10 AWG)



PE Cable with T terminal (SC10-5)
(⩾ 8AWG)



COM Cable
(Cat.5e or Upper)

## Tools



Insulated gloves



Screwdriver



Safety Shoes



Drill



Multimeter



Crimper



Torque Wrench



Wire Cutter



Utility Knife



Wrench



Spirit Level

## Different Functional Area on BMS

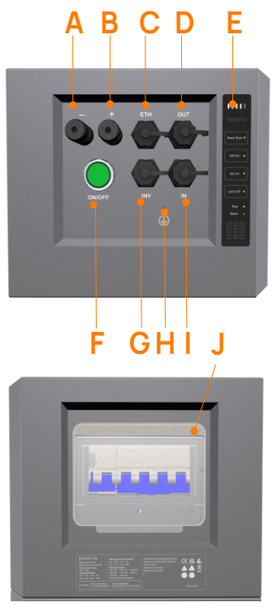


| Letter | Lable | Function |
|---|---|---|
| A | - | DC- |
| B | + | DC+ |
| C | ETH | Ethernet |
| D | OUT | Com Out |
| E | HMI | Human Machine Interface |
| F | ON/FF | ON/OFF |
| G | INV | Inverter COM |
| H | PE | PE Connection |
| I | IN | COM In |
| J | / | Circuit Breaker |



ZYC ENERGY CO., LTD +86 (0)755-2839 4019 WhatsApp: +86 19168831702



sales@zyc.energy / service@zyc.energy www.zyc.energy / www.zycportal.com

## Place the base

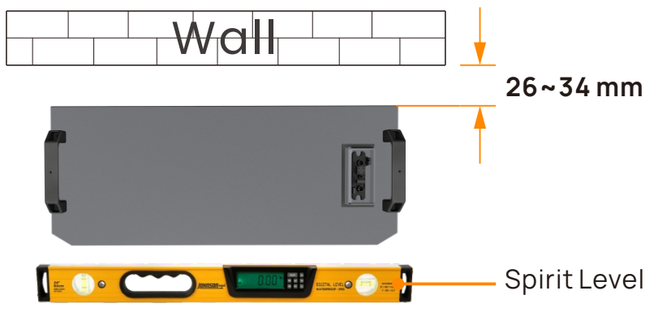


The base should be based on solid floor.
A spirit level is recommended for use when adjusting the feet.

## Quantity of Fixing Parts Needed

Number ①-⑨represent module sequence only in this part.
*Fixing part for BMS is necessary for any amount of modules

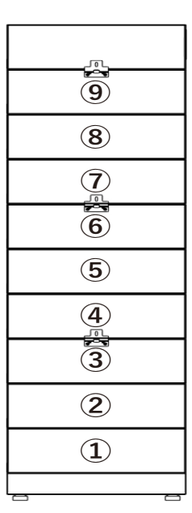


| Module Qty per Tower | Qty of fixing parts recommended | Position of module fixing parts |
|---|---|---|
| 2 | NONE | NONE |
| 3 | 1 | ③ |
| 4 | 1 | ④ |
| 5 | 2 | ③&⑤ |
| 6 | 2 | ③&⑥ |
| 7 | 2 | ③&⑦ |
| 8 | 3 | ③&⑥&⑧ |
| 9 | 3 | ③&⑥&⑨ |

## Power Cables Crimping

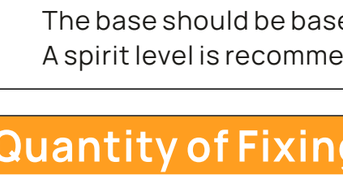


*Cables of 8/10 AWG is recommended to meet the need of SIMPO HV.
*Determine the cable size according to your system.

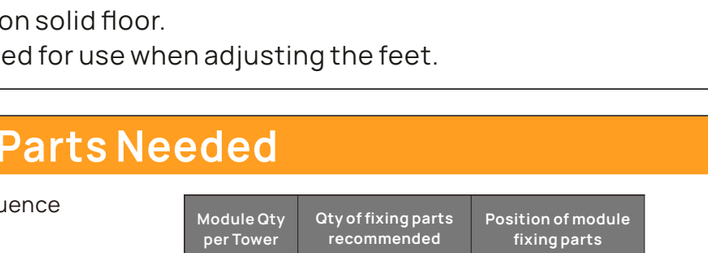




ZYC ENERGY CO., LTD +86 (0)755-2839 4019 WhatsApp: +86 19168831702

## Fix To The Wall

Stack up the modules and whenever reaches the quantity of fixing parts needed, follow the instructions below:

Step 1:Locate and drill holes for fixing parts on the wall.
Before stacking up the module that needs to be fixed to the wall, use the stencil to locate the drilling holes and finish the drilling.

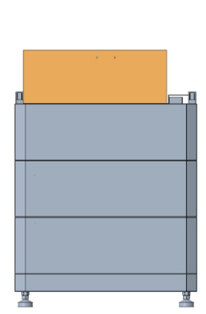

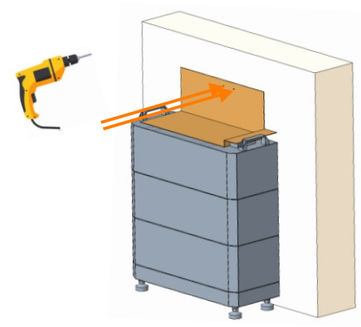

Step 2:Install fixing part A to the wall and fixing part B to the module.

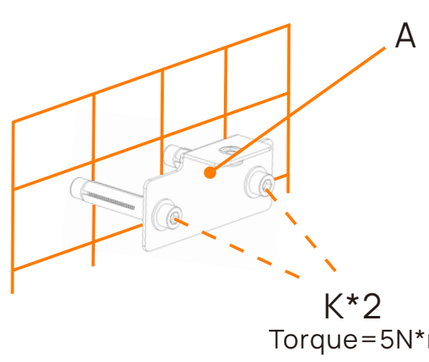


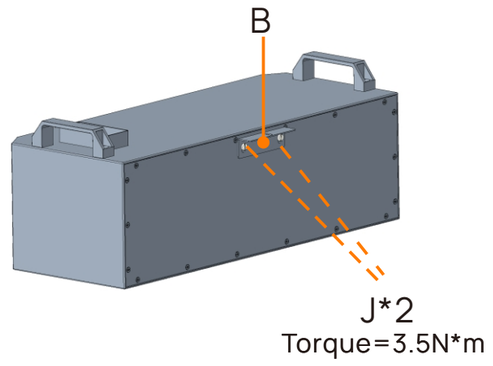


Step 3:Stack up the module and fix the screw between A and B

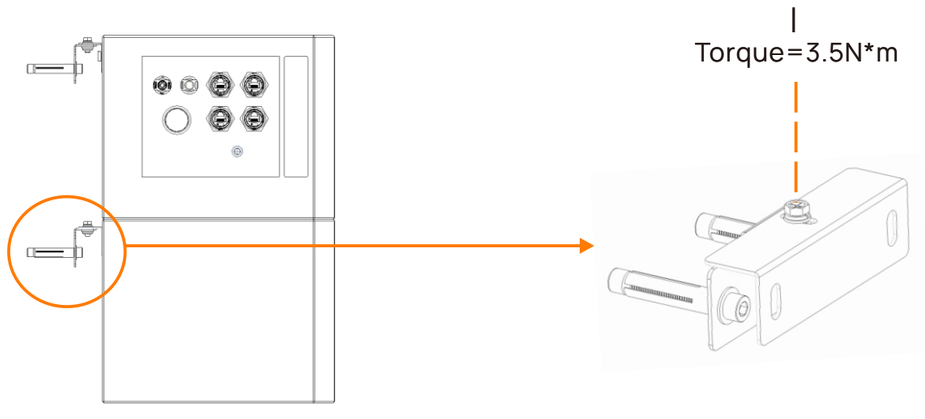




sales@zyc.energy / service@zyc.energy www.zyc.energy / www.zycportal.com

## Cables Connection

**System Overview:**

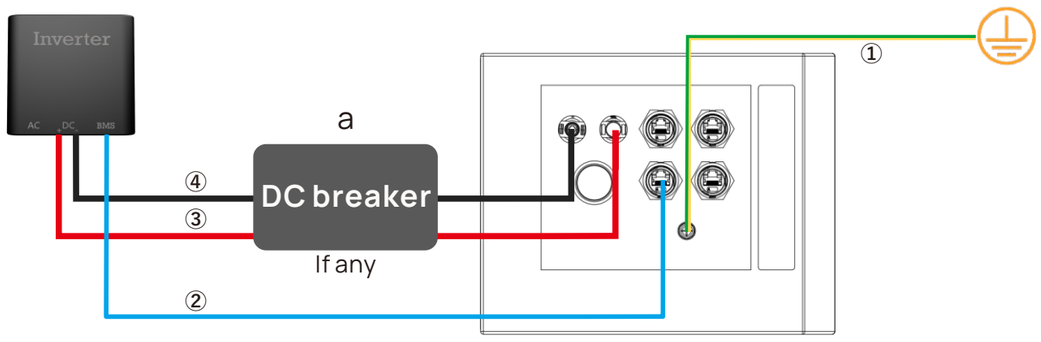


**PE Cables Connection:**

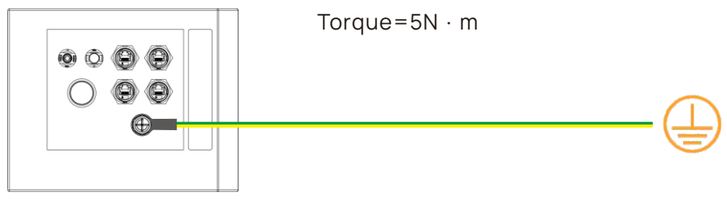


**Power Cables Connection:**

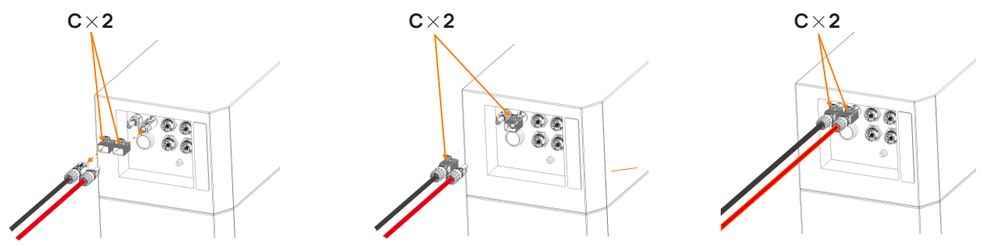


**Communication Cables Connection:**




Definition of SIMPO HV "INV" Port

| PIN NO. | 1 | 2 | 3 | 4 | 5 | 6 | 7 | 8 |
|---|---|---|---|---|---|---|---|---|
| Definition | 11VGND | 12V | 11V | CAN_H | CAN_L | 12VGND | RS485B | RS485A |

## Parallel Multiple Towers

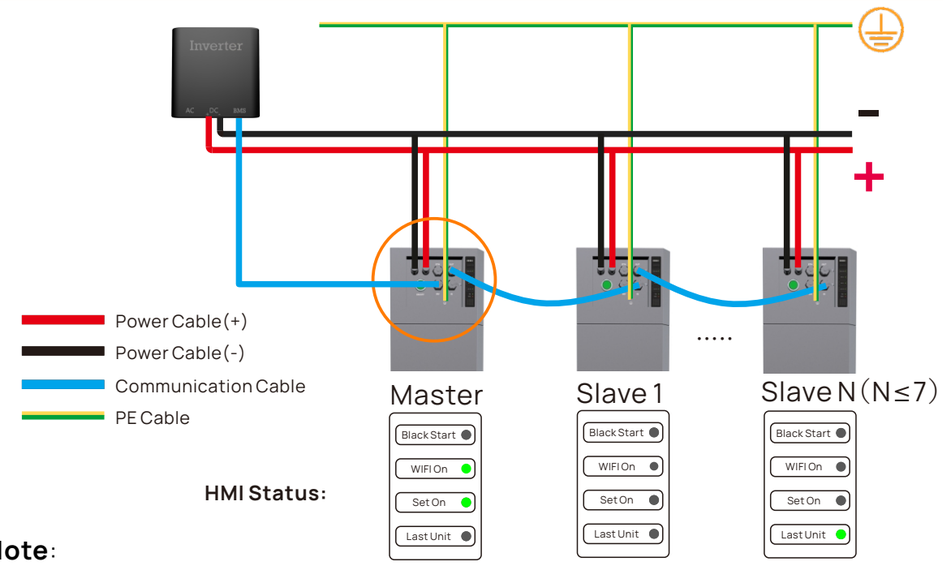


**HMI Status:**

**Note**:

- When parallel multiple towers(≤8) only the 'Set On' LED on master is ON.
- Only the 'Last Unit' LED of last tower(N) is ON.
- Only the 'WIFI On' on master tower will be on for energy saving. This function on slave towers will be turned off by master tower automatically.

## Human Machine Interface (HMI)




| Letter | Status | Operational State&Function | |
|---|---|---|---|
| a | ▮▮▮▮▮ | 80%<SOC≤100% | Indicates the SOC of the system |
| | ▮▮▮▮▮ | 60%<SOC≤80% | |
| | ▮▮▮▮▮ | 40%<SOC≤60% | |
| | ▮▮▮▮▮ | 20%<SOC≤40% | |
| | ▮▮▮▮▮ | 0%<SOC≤20% | |
| | While discharging, the last LED flashes quickly(Once per second) | | |
| | While charging, the last LED flashes slowly(Once per 2 seconds) | | |
| b | ● | Black Start On | Designed for off-grid systems. Press to supply energy to the inverter. Once the inverter starts working, LED will extinguish. |
| | ● | DEFAULT | |
| c | ● | Hotspot ON | 1. Connecting with internet: Flash slowly.<br>2. Connecting with mobile device: Flash normally.<br>3. Non-connection: Solid ON . |
| | ● | Hotspot OFF | |
| d | ● | DEFAULT | Confirm the master tower. Make sure only the LED on master tower is ON.<br>***Master tower: which is directly connected to the inverter.** |
| | ● | | |
| e | ● | DEFAULT | Confirm the last tower. Make sure only the LED on last tower is ON.<br>***Last tower: Last tower in parallel.** |
| | ● | | |
| f | ● | DEFAULT | 'FAULT' when system stops working |
| | ● | FAULT | |
| g | ● | DEFAULT | Alarm when fault occurs |
| | ● | FAULT | |
| h | 1 | DEFAULT | Number 1-9 correspond modules from top to bottom. |
| | 1 | FAULT | |



## Connection With Inverters

Connecting with **Kostal Plenticore Plus G2/ Plenticore G3 / Plenticore BI G2**

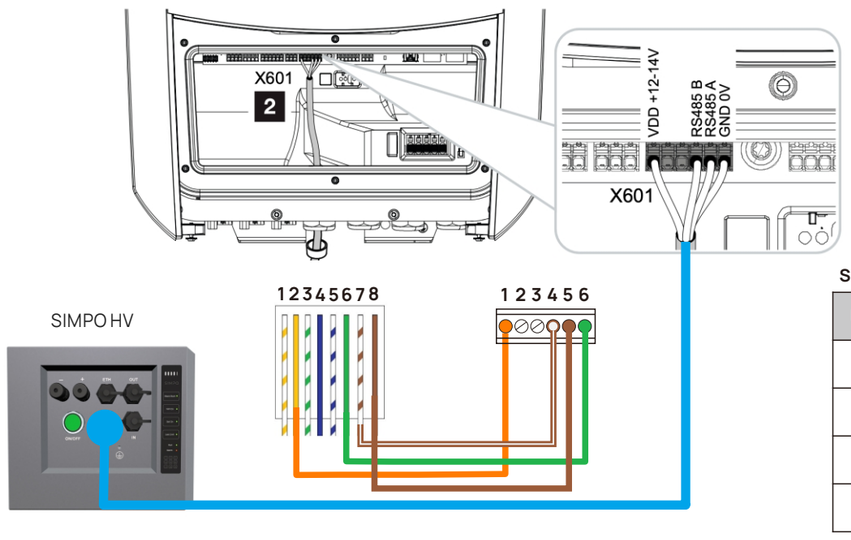


| SIMPO HV PIN NO. | KOSTAL PIN NO. |
|---|---|
| 2 | 1 |
| 6 | 6 |
| 7 | 4 |
| 8 | 5 |

Connecting with **Solis S6-EH3P & RHI -3P**

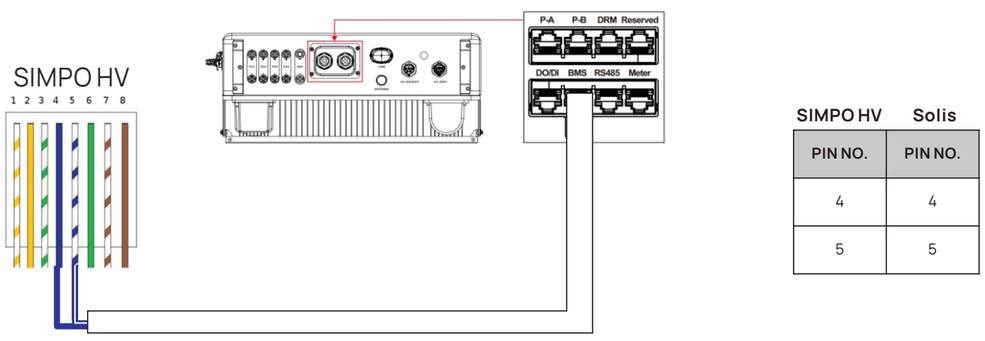


| SIMPO HV PIN NO. | Solis PIN NO. |
|---|---|
| 4 | 4 |
| 5 | 5 |

Connecting with **GoodWe** Inverters

| SIMPO HV PIN NO. | GoodWe PIN NO. |
|---|---|
| 4 | 4 |
| 5 | 5 |

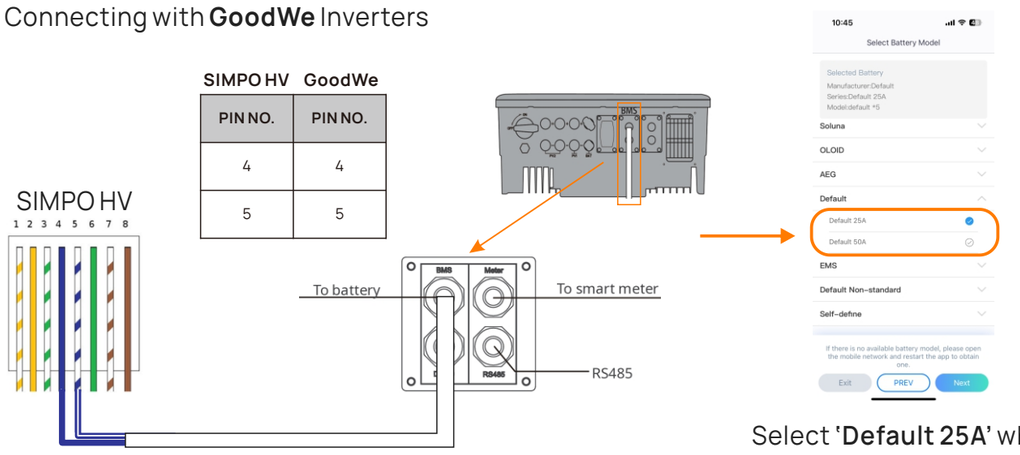


Select '**Default 25A**' when selecting 'Battery model'

## Start Up

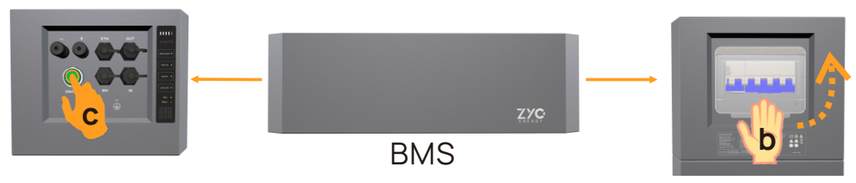


**a**.Turn on the **DC breaker** between battery and inverter(if any).
**b**.Turn on the **Air Switch.**
**c**.Press '**ON/OFF**' to start the system.

## Connect to Internet & ZYC Portal & ZYC Assist

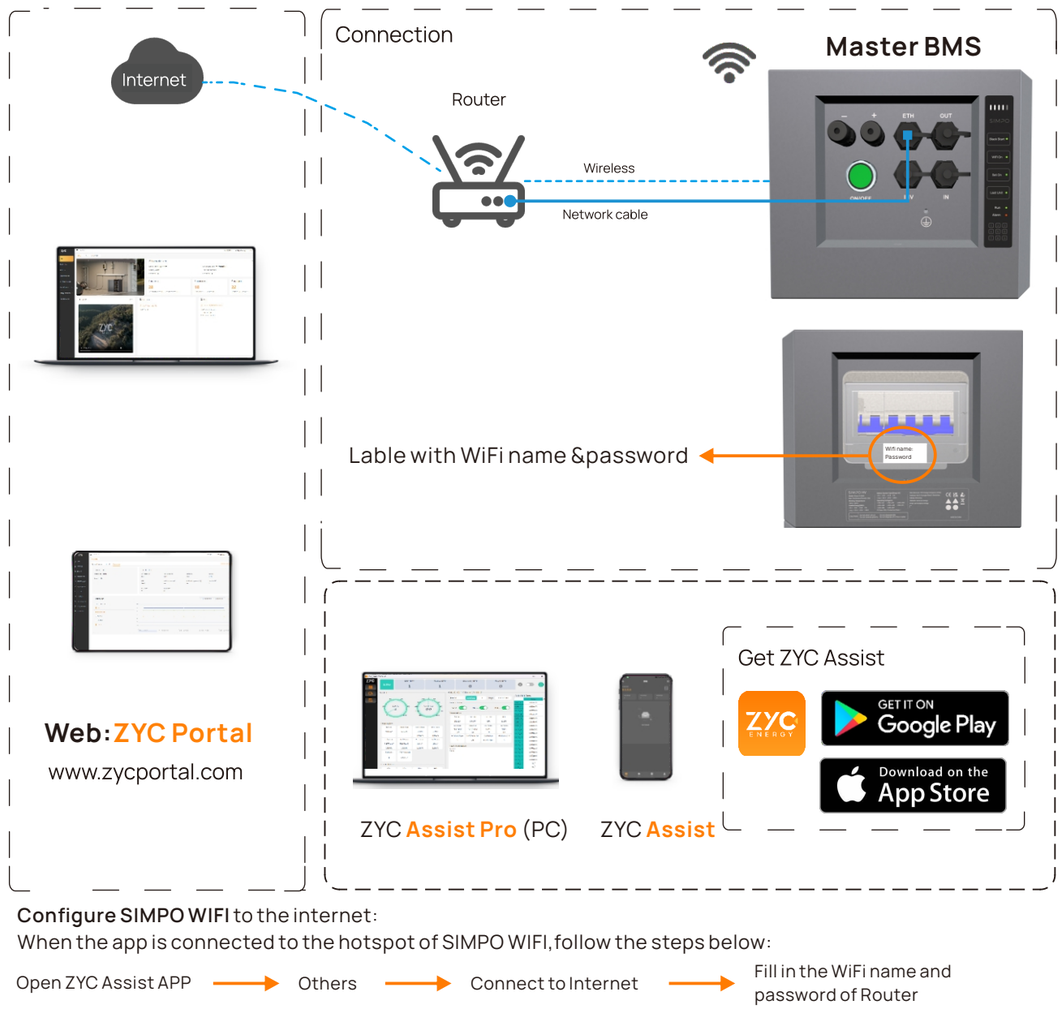


**Configure SIMPO WIFI** to the internet:
When the app is connected to the hotspot of SIMPO WIFI, follow the steps below:

Open ZYC Assist APP → Others → Connect to Internet → Fill in the WiFi name and password of Router