TS4-A with TAP and CCA

Installation Manual



Visit the Tigo Energy Help Center for comprehensive videos, articles, and other resources for all Tigo products.

Disclaimer of Warranties and Limitation of Liability

The information, recommendations, descriptions, and safety disclosures in this document are based on Tigo Energy, Inc.'s ("Tigo") experience and judgment and may not cover all contingencies. If further information is required, consult a Tigo representative. Sale of the product shown in this document is subject to the terms and conditions outlined in Tigo's Limited Warranty, Terms and Conditions, and any other contractual agreements between Tigo and the purchaser.

THERE ARE NO UNDERSTANDINGS, AGREEMENTS, WARRANTIES, EXPRESSED OR IMPLIED, INCLUDING WARRANTIES OF FITNESS FOR A PARTICULAR PURPOSE OR MERCHANTABILITY, OTHER THAN THOSE SPECIFICALLY SET OUT IN ANY EXISTING CONTRACT BETWEEN THE PARTIES. ANY SUCH CONTRACT STATES THE ENTIRE OBLIGATION OF TIGO. THE CONTENTS OF THIS DOCUMENT SHALL NOT BECOME PART OF, OR MODIFY ANY CONTRACT BETWEEN, THE PARTIES.

In no event will Tigo be responsible to the purchaser or user in contract, in tort (including negligence), strict liability or otherwise for any special, indirect, incidental, exemplary, reliance or consequential damage or loss whatsoever, including but not limited to injury to persons, damage or loss of use of property, equipment or power systems, loss of profit, cost of capital, loss of power, additional expenses in the use of existing power facilities, or claims against the purchaser or user by its customers resulting from the use of the information, recommendations and descriptions contained herein. The information contained in this document is subject to change in Tigo's sole discretion and without notice.

Contents

Overview 1

Safety 2

Install TS4s 3

Install the Tigo Access Point (TAP) 6

Design Considerations 6

Install Procedure 7

Install the CCA 8

Design Considerations 8

Install Procedure 8

LED Status Indicators 10

Commissioning 11

Specifications 12

Warranty 12

Support 12

Overview

Tigo TS4 Flex module level power electronics (MLPE) enable monitoring, rapid shutdown, and optimization of solar modules.

TS4-A-M (monitoring), TS4-A-S (monitoring and rapid shutdown), and TS4-A-O (monitoring, rapid shutdown, and optimization) MLPE use the Tigo Access Point (TAP) and the Cloud Connect Advanced (CCA) hot spot to communicate with inverters and the cloud.

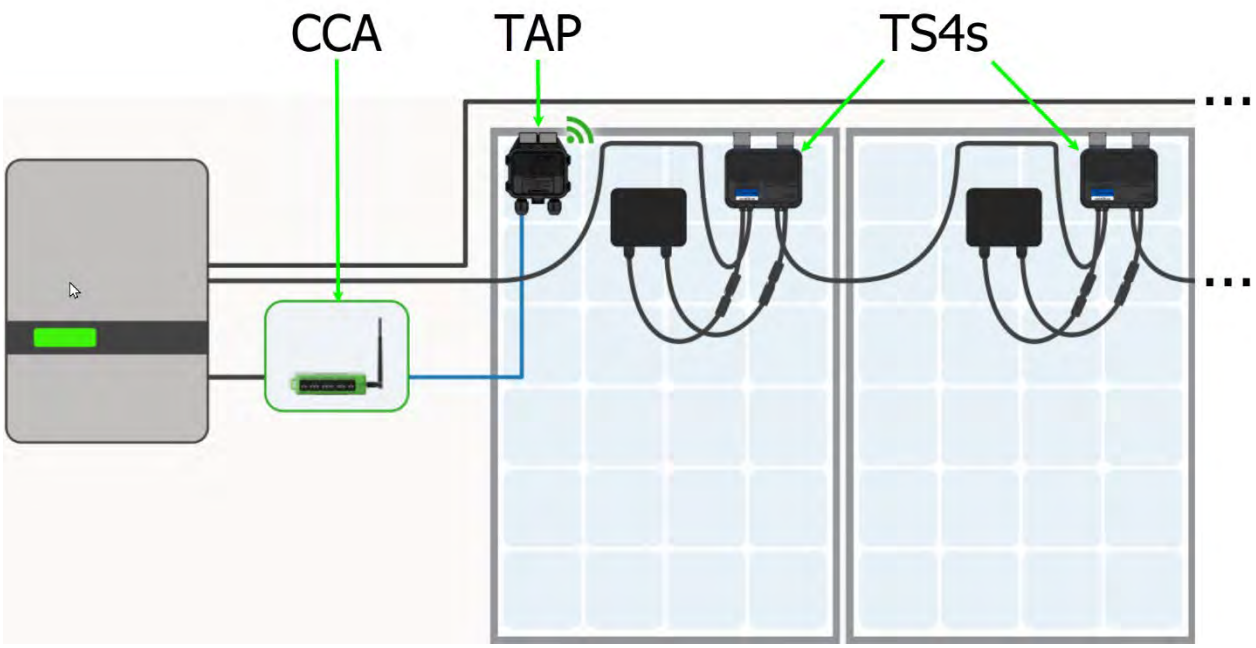

This manual explains how to install TS4-A/M/O MPLE, TAPs, and the CCA. For instructions how to install TS4-A-F/2F MPLE used with the rapid safety shutdown (RSS) transmitter, visit the Tigo Energy Downloads page.

Safety

Tigo equipment must be installed and maintained by licensed personnel in accordance with the National Electrical Code and ANSI/NFPA 70 wiring methods. In addition:

- Components must operate within the technical specifications listed in their datasheets. Failure to follow instructions herein may cause equipment damage not covered by the warranty.
- Connectors from different manufacturers cannot be mated with each other.
- Installers must wear appropriate PPE and use insulated tools.
- This product could expose the user to chemicals known to the State of California to cause cancer. For more information refer to www.P65Warnings.ca.gov.

These safety symbols may appear in the manual:



A hazardous situation which could result in serious injury or loss of life.



A hazardous situation which could result in injury or damage to the product.



An important operational note.

Install TS4s

- Do not install TS4s if they have been physically damaged or with damaged or substandard wiring or connectors.
- Do not connect or disconnect TS4s under load.
- Do not apply an external voltage source to a module or string equipped with TS4s.

TS4s mount directly onto module frames with spring clips where the frame edge extends ≥22mm/.85in and the clearance between the frame edge and the module glass is ≥30mm/1.2in. Frame thickness should be 1.8mm/.07in – 2.2mm/.085in.

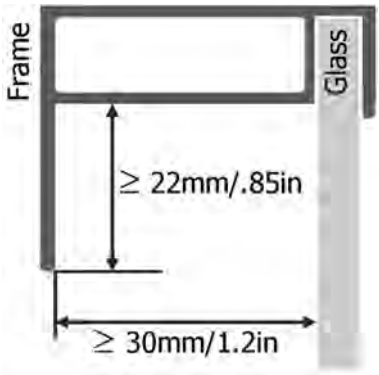

If using frameless modules, remove the clips and bolt the TS4 directly to the PV rail with M8 bolts and torque to 10.2Nm. No additional grounding is required.

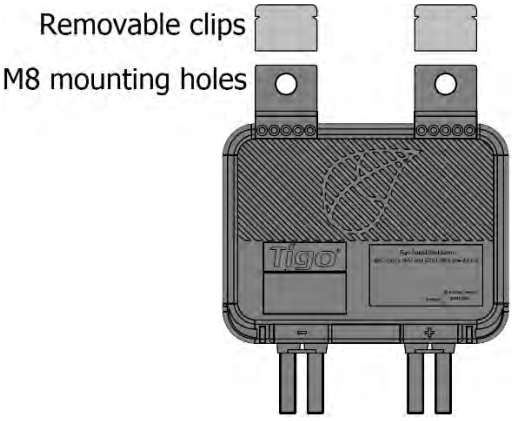

To install a TS4:

1. Remove the QR/barcode sticker and affix it to a suitable map of the solar array.

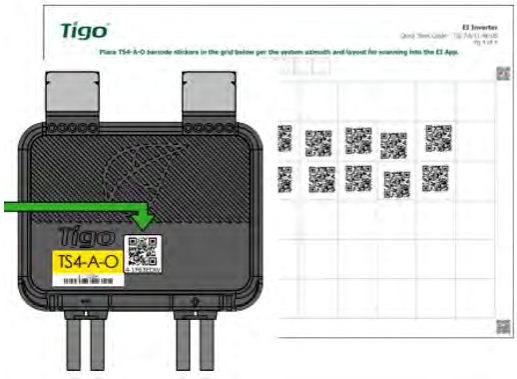

   Try to match the physical layout of modules on the roof.

2. Attach the TS4 to the top of the PV module frame using the silver clips with the cable glands facing down. The TS4 and its cables, cable glands, and connectors must not touch the roof surface.



3. Connect the shorter TS4 input leads to the PV modules.





You must connect the shorter TS4 input leads to the PV modules before connecting to neighboring TS4s. Failure to do so can damage the TS4 units.

4. Connect the longer set of TS4 output cables to the neighboring TS4 to create a string.

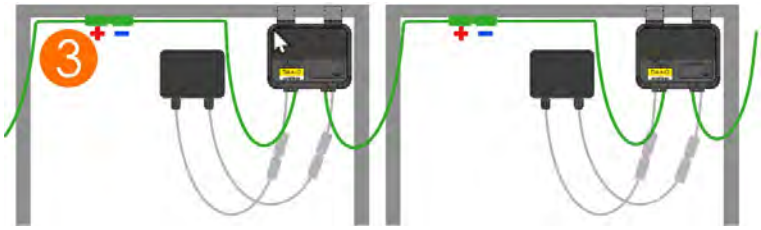

To disconnect a TS4:

- Activate rapid shutdown by turning off the CCA and inverter or by using the designated PV rapid shutdown system (PVRSS) initiator.
- Wait 30 seconds after a rapid shutdown activation before disconnecting DC cables.
- Disconnect individual TS4-A output cables from a string before disconnecting the TS4-A input cables from the module junction box.

Always assume that TS4 units are in an ON state.

Install the Tigo Access Point (TAP)

A TAP communicates wirelessly with TS4 devices to gather monitoring data and enable rapid shutdown. The TAP communicates with a CCA via a ferruled 4-wire communication cable such as shielded RS-485. Refer to this Help Center article TAP and GATEWAY Communication Cable Installation for details.

TS4-A-O MLPE used to optimize performance only and not monitoring or module level shutdown do not require a TAP or CCA.

Complete all TAP connections before powering on the CCA.

Design Considerations

One TAP can communicate with up to 300 TS4s when placement guidelines are followed. A CCA can communicate with up to seven TAPs and up to 900 TS4s. To calculate the number of TAPs and CCAs required for your project, visit the Tigo Product Selection Tool.

- A TAP communicates directly with any TS4 within 10m/33ft.

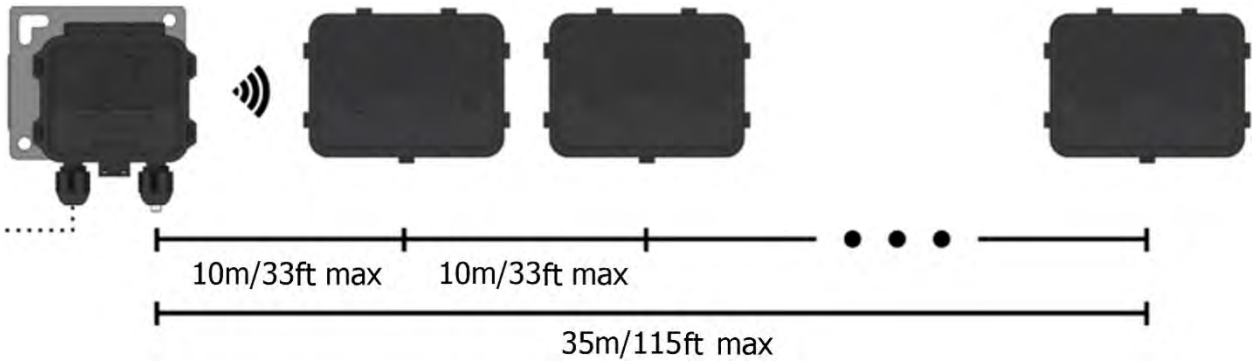

- Each TS4 can relay data to and from another TS4 within 10m/33ft.
- The TAP can communicate through relays to any TS4s within 35m/115ft.

Install the TAP centrally in an array for best coverage.

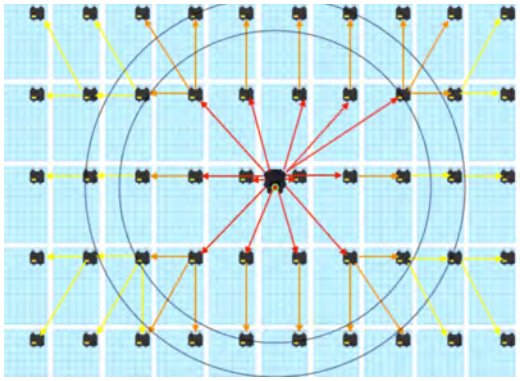

Ensure there are no obstructions that may interfere with the TAP signal to other TS4 units in the array. If the array has multiple roof planes, you may need to install multiple TAPs. Refer to the Help Center article TAP Placement and Layout for details.

Install Procedure

To install a TAP using a ferruled four-wire RS-485 cable:

1. Run the cable from the CCA *GATEWAY* terminal to the TAP. If using more than 1 TAP per CCA, run the cable to the first TAP in the series.
2. Connect cable wires to the left side of the TAP using either the quick-connect or the terminal block.



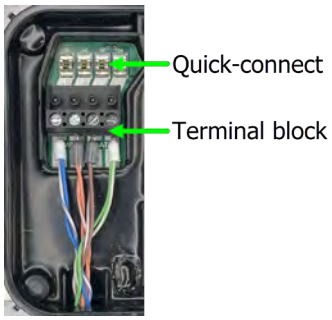

3. If connecting to another TAP, use the right-side terminals after removing the pre-installed 120Ω terminating resistor.
4. At the last TAP, leave the terminating resistor in the right-side terminal block.
5. Attach the TAP to the PV module frame using its metal mounting bracket.

Install the CCA

A CCA and TAP enable monitoring and rapid shutdown. TS4-A-O MLPE used to optimize performance only do not require a TAP or CCA.

Design Considerations

A CCA should control all TS4s on all strings connected to a specific inverter or MPPT. Install the CCA near this inverter with access to AC power and the internet. Ethernet and WiFi are built in.

- For PV RSS compliance, the CCA must be on the same AC branch circuit as the inverter(s) it is controlling. The rapid shutdown initiator, whether it is an automatic disconnect or a manual switch, must turn off power to the CCA.
- One CCA can communicate with up to 7 TAPs and up to 900 TS4s.
- Make all connections to TAPs before powering on the CCA.
- The DC power supply may be a Tigo supply or a 3rd-party supply with 120/240V AC input and $24V_{DC}$ output.

A CCA also includes two three-pin RS-485 connections to enable up to 32 Modbus communications with 3rd-party data sources such as inverters, charge controllers, revenue-grade meters, and weather monitoring.

Install Procedure

To install a CCA:

1. Mount the CCA within a NEMA-rated enclosure that is suitable for the site environment: indoors, minimum NEMA 1; outdoors, minimum NEMA 4.
2. Connect the TAP RS-485 wires to the CCA *GATEWAY* port:

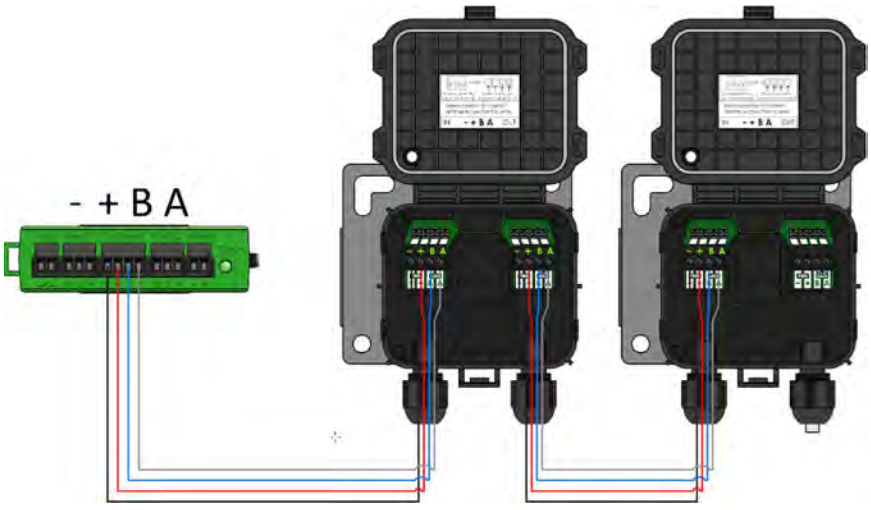

3. If used, connect any 3rd-party devices using Modbus to the *RS-485 1* and *RS-485 2* terminals:

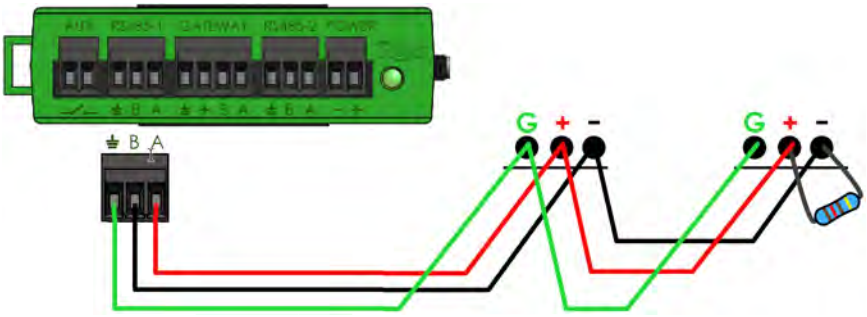

- All devices must have a unique Modbus address.
- Devices connected in series must have the same baud rate, parity, and stop bit settings.
- A 120Ω resistor must connect the + and – terminals on the last Modbus device.

For a list of supported Modbus devices, refer to the Supported RS-485 Devices Help Center article. For details about using Modbus, refer to How-To: Setup and Monitor Modbus Connected Devices (Inverters, Meters & Sensors).

4. Connect the power supply's DC output leads to the CCA power terminals:

Rail power supply:

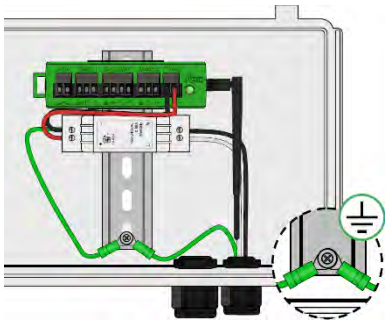

External power supply:

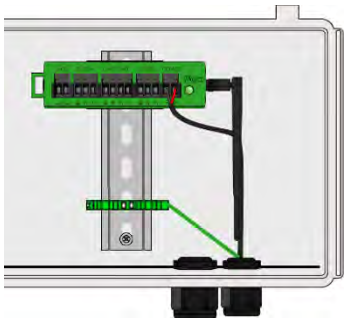

Complete all communications connections before powering on the CCA.

LED Status Indicators

The LED on the right of the CCA indicates system status as well as the status of the commissioning *Discovery* process:



LED	State	Description
Solid green	System OK	The system is operating normally.
Blinking green/gray	SMART app activity	The CCA is connected to the Tigo SMART app.
Blinking green/yellow	User PV-Off	The PV-Off mode was manually activated.
Blinking yellow/gray	Discovery	The CCA is scanning for TAPs/TS4s.
Solid yellow	Warning	Scanning is incomplete or the CCA cannot connect to the Tigo server.
Blinking red/yellow	Auto PV-Off	The PV-Off mode was automatically activated.
Solid red	Error	CCA cannot find all TS4s or cannot connect to the Tigo server.

Use the Tigo Energy Intelligence (EI) app (available in the App Store or Google Play) to troubleshoot CCA issues.

Commissioning

Perform system configuration and registration with a browser at https://ei.tigoenergy.com or with the Tigo Energy Intelligence (EI) mobile app available in the App Store or Google Play. Final commissioning requires using the Tigo EI mobile app.

Browser

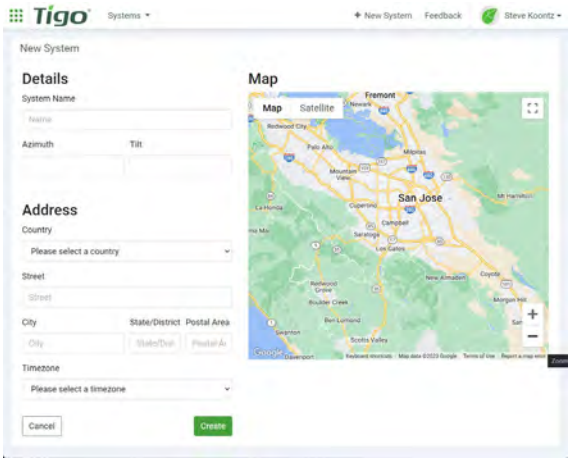

Mobile App

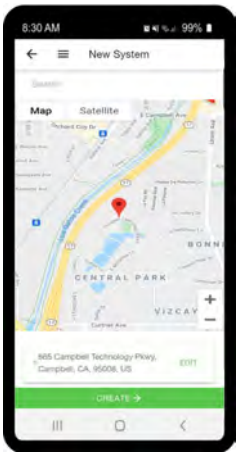

- Commercial installers can use a browser to enter the site layout of large numbers of TS4s and TAPs and then use the Tigo EI app to commission the system.
- Residential installers can use the Tigo EI app for the entire process.

Use a browser or app to:

- Create a Tigo user account.
- Set system information.
- Select equipment.
- Configure equipment and site layout.
- Set system and network access.

Use the mobile app to:

- Connect CCAs to a smartphone or tablet.
- Complete commissioning after all site equipment and TS4 barcodes have been entered.

For detailed instructions how to use either the browser or app, visit the Tigo Energy Help Center Commissioning page.

Scan this QR code to download the app.

Tigo EI App

If you need further help, contact Tigo support within the app or via support@tigoenergy.com.

Specifications

Download comprehensive specifications for all Tigo products from the Tigoenergy.com Downloads (www.tigoenergy.com/downloads) page.

Warranty

Download comprehensive warranty information from the Tigoenergy.com Downloads (www.tigoenergy.com/downloads) page.

Support

If you have any questions about installing or maintaining Tigo equipment, visit the Tigo Help Center, email support@tigoenergy.com, or call:

- North America (7 a.m to 6 p.m. Pacific Time): +1 408 402-0802
- South America (Brazil): +55 21-991045050
- Europe: Phone: +39 055 1987 0059 (Italian, English, German, Polish, Spanish)
- Middle East: Phone: +972 50 687-8618
- Japan: +81 3 4567-6199
- China: +86 512 6587-4600
- Taiwan: +886 919 743-749
- Australia: +61 2 5700 8347