SUNGROW
Clean power for all

Quick Installation Guide

Battery Energy Storage System (BESS)

PowerKeeper-ST050/062/075/087/100/112/125/137/150/
162/175/187/200/212/225/237/250CF



⚠ NOTICE

For safety instructions, please refer to the last section of this guide.

Product Introduction

The BESS is primarily composed of the decorative upper cover, S/G for the main battery stack, upper cover for the auxiliary battery stack (if applicable), Pack, main battery stack base, auxiliary battery stack base, and other modules. The system allows 4 to 20 Packs to be connected in series.

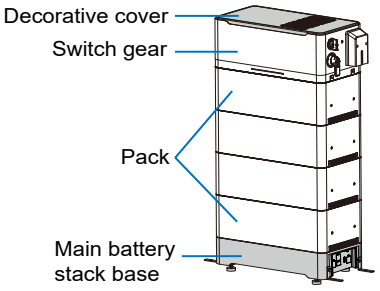

Main battery stack

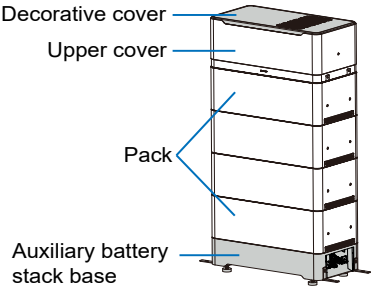

Auxiliary battery stack

Model	Decorative cover	Switch gear	Upper cover	Pack	Main battery stack base	Auxiliary battery stack base	Recommended combinations*
ST050CF	1	1	0	4	1	0	4
ST062CF	1	1	0	5	1	0	5
ST075CF	2	1	1	6	1	1	3+3
ST087CF	2	1	1	7	1	1	4+3
ST100CF	2	1	1	8	1	1	4+4
ST112CF	2	1	1	9	1	1	5+4
ST125CF	2	1	1	10	1	1	5+5
ST137CF	3	1	2	11	1	2	4+4+3
ST150CF	3	1	2	12	1	2	4+4+4
ST162CF	3	1	2	13	1	2	5+4+4
ST175CF	3	1	2	14	1	2	5+5+4
ST187CF	3	1	2	15	1	2	5+5+5
ST200CF	4	1	3	16	1	3	4+4+4+4
ST212CF	4	1	3	17	1	3	5+4+4+4
ST225CF	4	1	3	18	1	3	5+5+4+4
ST237CF	4	1	3	19	1	3	5+5+5+4
ST250CF	4	1	3	20	1	3	5+5+5+5

*For the recommended combination, the first number represents the quantity of Packs in the main battery stack. Numbers from the second onward represent the quantities of Packs in the auxiliary battery stacks. A maximum of five Packs can be stacked for each battery stack.

Scope of Delivery

Pack Shipping Box

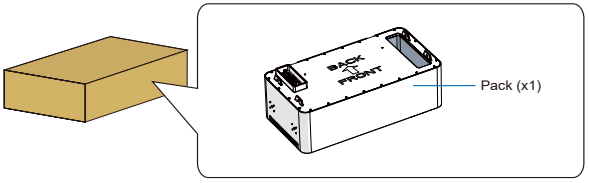

Main Battery Stack Accessory Shipping Box

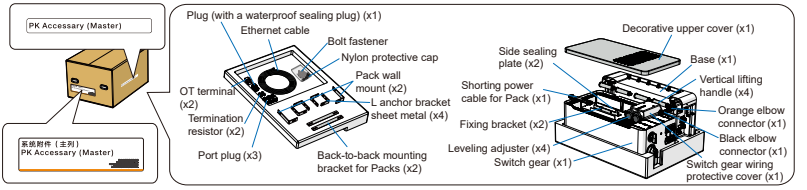

Auxiliary Battery Stack Accessory Shipping Box

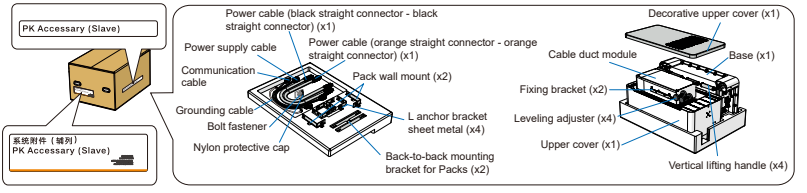

Installation Tools


Phillips/Slotted torque screwdriver


Socket wrench


Wire strippers


Wire cutter


Crimping tool


Rubber mallet


Utility knife


Hydraulic pliers


Torque wrench


Marker



Multimeter


Hammer drill


Heat shrink tubing


Heat gun


Level


Measuring tape

Personal Protective Equipment


Safety gloves


Safety goggles


Safety shoes


Protective clothing

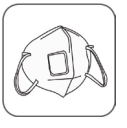
Dust mask



Safety helmet



Reflective vest

Electrical Safety Equipment

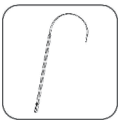

Rescue pole



Anti-static wristband



Insulated gloves



Insulated stool

- The above figures are for reference only and may deviate from the actual product.

BESS Installation

- The BESS installation process is illustrated with ST050CF as an example.

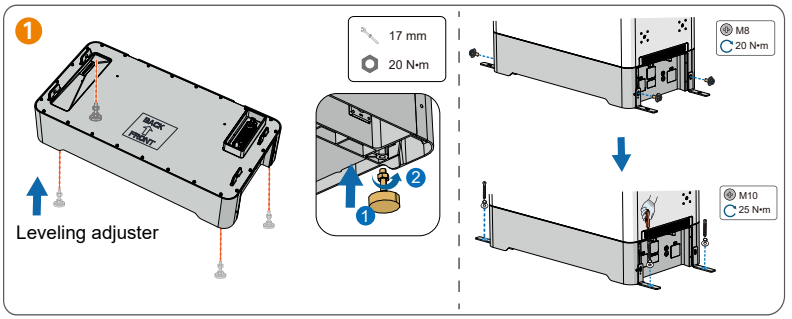

- If the equipment is installed against a wall, maintain a 25 mm to 30 mm clearance between the base and the wall. If the installation site floor already meets the levelness requirement and no adjustment via leveling adjusters is needed, the battery base can be directly placed on the floor and secured using the L anchor bracket sheet metal.

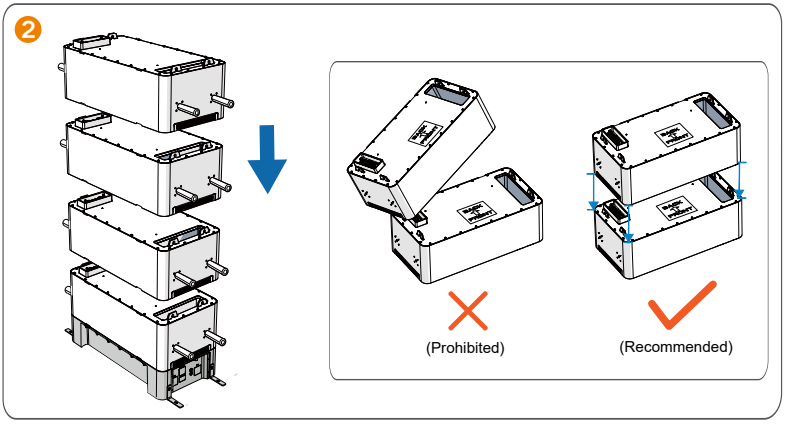

- After installing the Packs, remove the vertical lifting handles and install the nylon protective caps in the handle mounting points.

NOTICE

- Packs can be manually lifted using handles or hoisted using shackles (recommended: US-standard bow shackle, 0.75 tonnes) attached to the four lifting points on the Pack upper cover.
- Lift and install Packs with care. Localized paint peeling on the enclosure may occur if the equipment is handled roughly.
- Minor gaps between Packs may occur during random stacking, but this does not affect electrical performance. If a more seamless appearance is preferred, try reordering the Packs. If the issue persists, contact SUNGROW or the retailer.

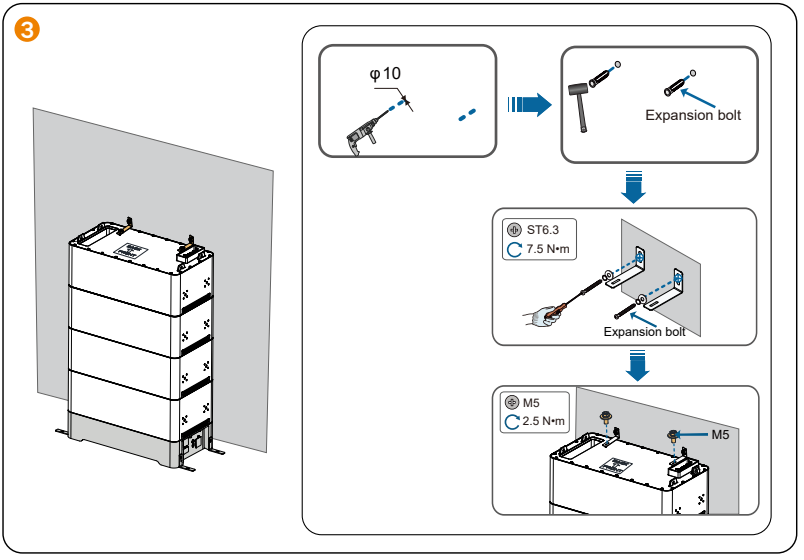

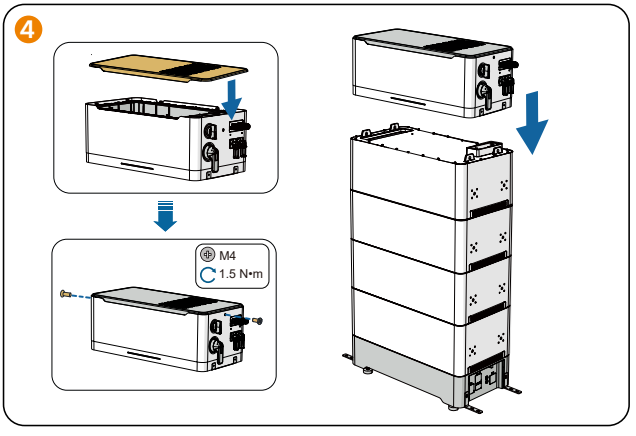

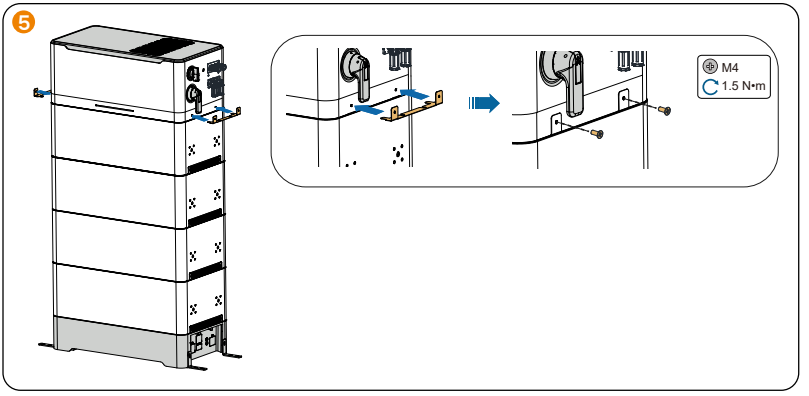

- For auxiliary battery stacks with a upper cover, install the fixing bracket following the same procedure.

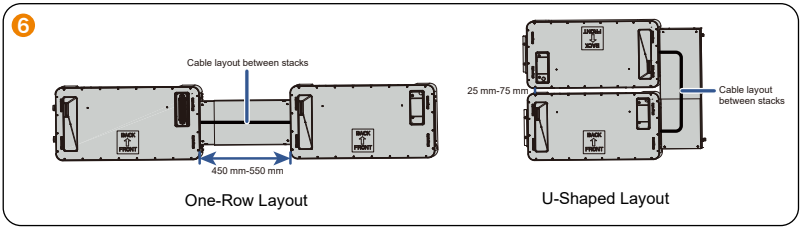

One-Row Layout

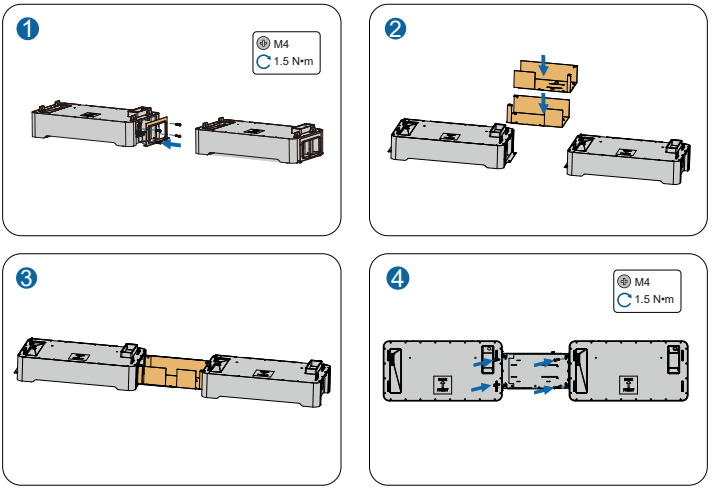

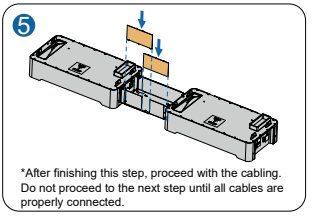

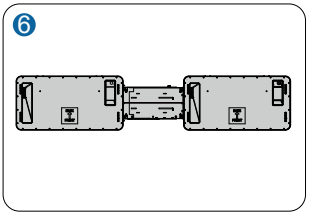

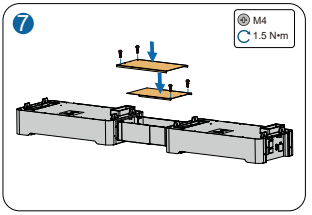

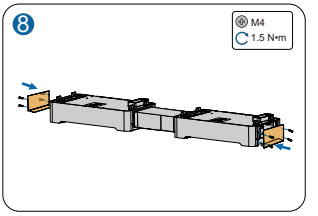

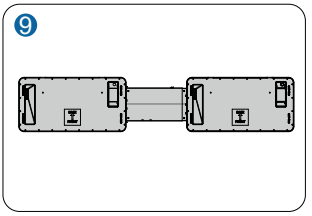

U-Shaped Layout

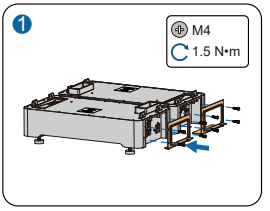

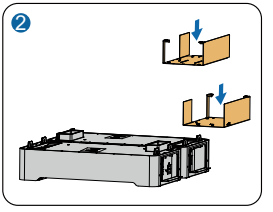

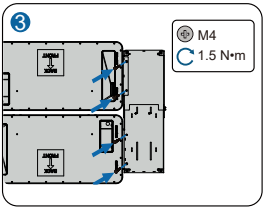

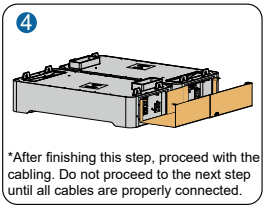

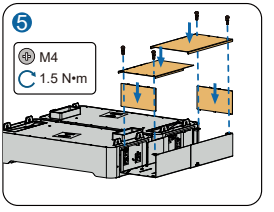

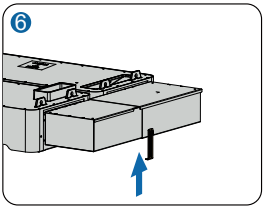

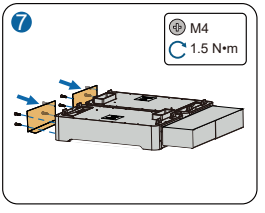

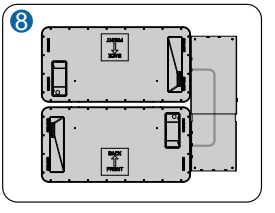

Electrical Connection Overview

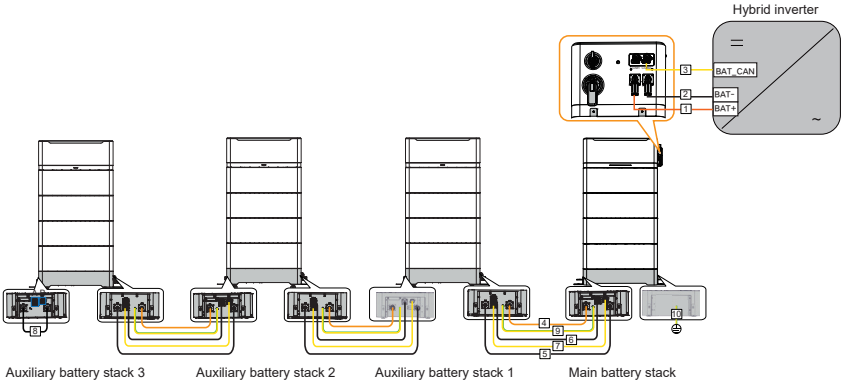

No.	Name	Mark	Recommended specification*	Note
1	Main power cable (positive)	P+	70 mm^2	Connection distance (≤40 m)
2	Main power cable (negative)	P-	70 mm^2	Connection distance (≤40 m)
3	External CAN communication cable	COM1	/	Termination resistor for connection (included in product accessories)
		COM2	Ethernet cable (CAT5e or higher shielded cables)	Connection distance (≤40 m) The shipment accessories include a 3 m Ethernet cable. (The communication cable shall be cut to length according to the actual on-site requirement.)
4	Stack power cable (positive)	B_R / B_L	70 mm^2	Quick-connect cable**
5	Stack power cable (negative)	B-_R / B-_L	70 mm^2	Quick-connect cable**
6	Auxiliary power cable***	BUS+_R / BUS+_L	4 mm^2	Quick-connect cable**
7	CAN communication cable***	COM_R / COM_L	Ethernet cable	Quick-connect cable**
8	Stack negative jumper cable	B_L / B-_L	70 mm^2	Quick-connect cable**
9	Grounding cable	⏚	35 mm^2	Included in product accessories
10				Prepare by the customer

*The aforementioned cable conductors utilize homogeneous copper, and the design is based on overhead installation.

**A quick-connect cable refers to a preassembled cable that can be plugged directly into its corresponding port. It is included in the product accessories and requires no on-site fabrication. The customer shall prepare cables (items 1, 2, and 3) for connecting the BESS to the hybrid inverter as well as the main battery stack grounding cable (item 10).

***If the auxiliary equipment power port and the CAN communication port are not connected to their respective cables (labeled Port A and Port B as shown in the figure), insert the plug with a waterproof sealing plug from the master battery stack accessory shipping box into Port A. For Port B, install the port plugs and termination resistors provided in the same shipping box.

⚠ NOTICE

When installing the quick-connect cables between battery stacks, note the following:

- During the installation of the communication connector, a “click” sound will indicate that the connector is fully seated. Gently pull the DC cable backward to check whether it is securely fastened.
- After installing the auxiliary power cable, press the green connector position assurance (CPA) to the locked position. To disconnect, first pull out the green CPA. Then, press button “1” and button “2” in sequence to release the cable.

- After installing the stack positive and negative power cables, push the green locking slider inward to secure the connection. To unlock, use a small tool (such as a screwdriver) to depress the front of the green locking slider while sliding it outward. Once released, press the button on the connector to pull out the cable.

PE Cable

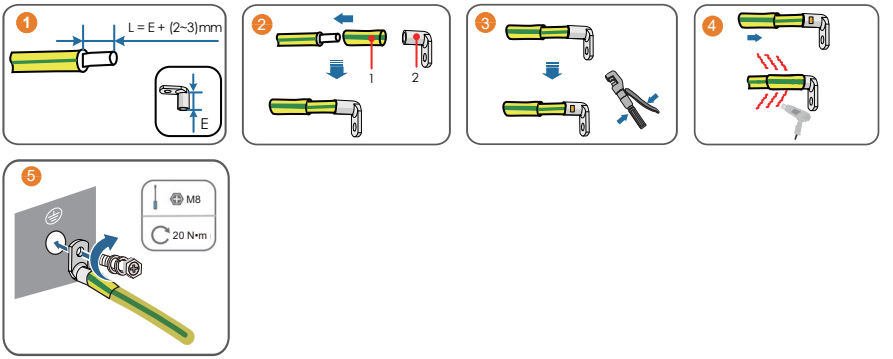

Connect DC Cables

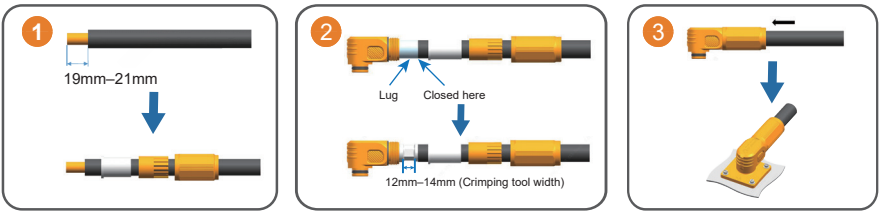

Communication Connection

Communication connector:

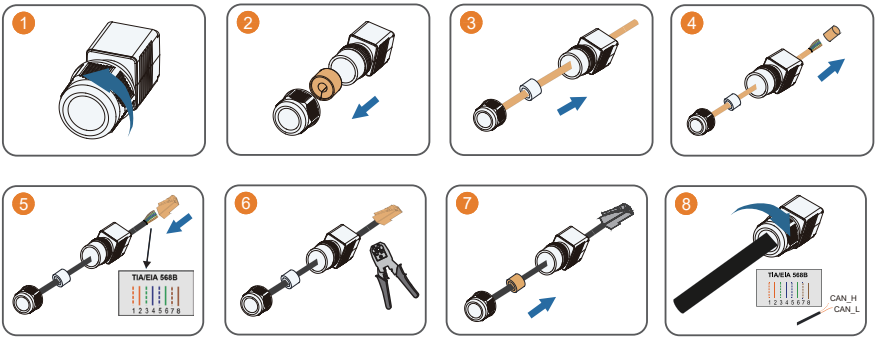

Termination resistor:

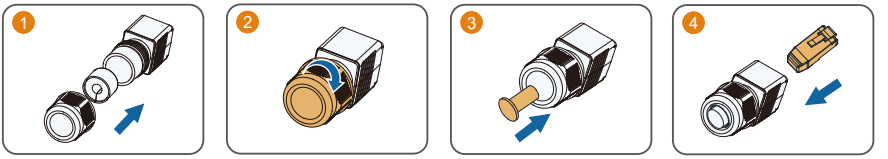

Cable connection:

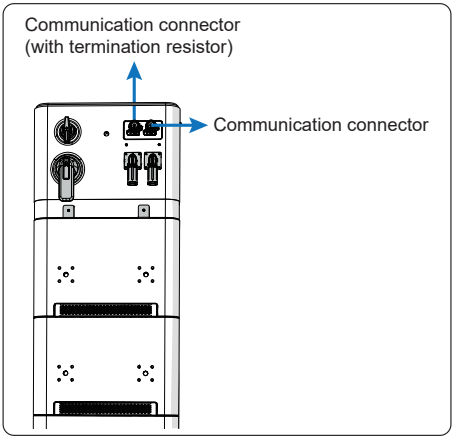

Install Switch Gear Protective Cover

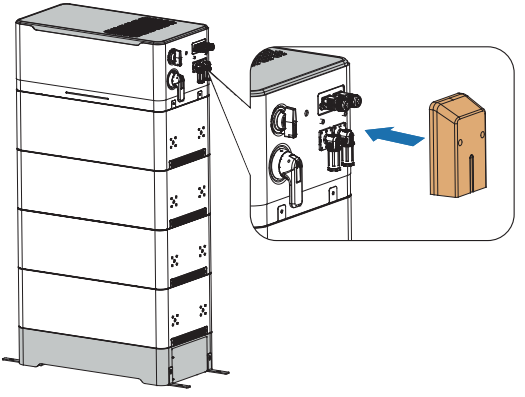

Powering On

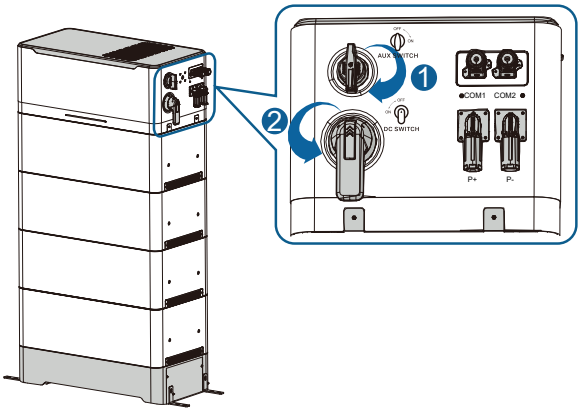

Powering Off

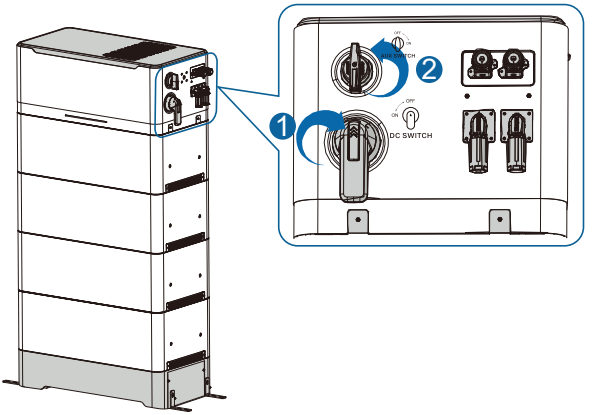

Tag-Out and Lock-Out (TOLO)

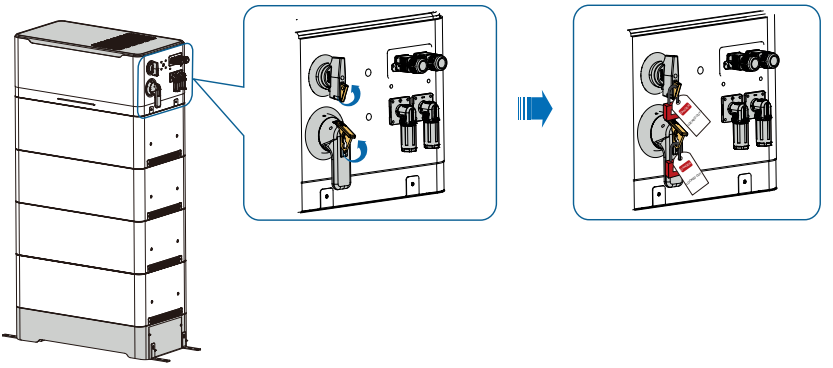

LED Indicators

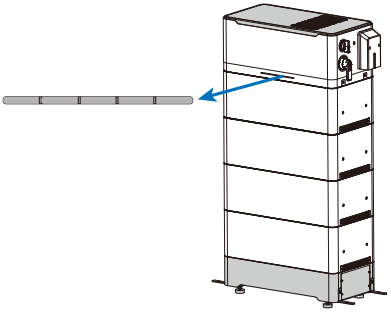

Main battery stack

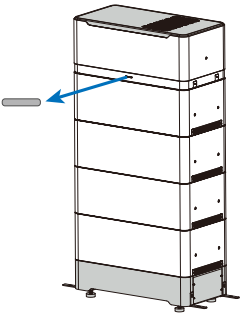

Auxiliary battery stack

SOC Indicator

Indicator	Color	Status	Meaning
	Yellow	Steady on	SOC ≤ 5%
	Blue	Steady on	5% < SOC ≤ 20%
	Blue	Steady on	20% < SOC ≤ 40%
	Blue	Steady on	40% < SOC ≤ 60%
	Blue	Steady on	60% < SOC ≤ 80%
	Blue	Steady on	80% < SOC ≤ 100%

- During the charging process of the BESS, the SOC indicator displays a chasing lights effect; during the discharging process, the SOC indicator displays a blinking effect.

Status Indicator

Main Battery Stack Status Indicator:

Indicator	Color	Status	Meaning
	Blue	Steady on	In normal operation
		Flashing Interval: 1 s	Self-testing
		Flashing Interval: 0.5 s	Updating
	Red	Steady on	Main battery stack fault
	Grey	In shutdown status	The BESS is powered off and in shutdown status.

Auxiliary Battery Stack Status Indicator:

Indicator	Color	Status	Meaning
	Blue	Steady on	In normal operation
		Flashing Interval: 1 s	Self-testing
		Flashing Interval: 0.5 s	Updating
	Red	Steady on	Auxiliary battery stack fault
	Grey	In shutdown status	The BESS is powered off and in shutdown status.

EN

- This document will be updated from time to time due to updates of the product or other reasons. Under no circumstances should this document be taken as a substitute for the user manual and the safety instructions provided on the product.
- Before performing any operation, please read through carefully the user manual and relevant standards and specifications. You can find the related documents by visiting http://support.sungrowpower.com/ or by scanning the QR code provided on the product or the back cover of this Quick Installation Guide.
- Operations on the equipment must only be performed by qualified technical persons. The qualified technical persons must have received specialized training, read through the user manual to gain a good understanding of the relevant safe operation instructions, and be familiar with the applicable local standards and safety code for electrical systems.
- Before installation, check the delivered items for quantity according to the packing list and see if the delivery matches the order you placed. Meanwhile, inspect the items for any visible damage. Contact the transport service provider or SUNGROW in case of anything abnormal.
- The cables used for the battery energy storage system must all be intact and well-insulated. Be sure to use insulated tools and wear personal protective equipment properly during operation.
- The cable used must be intact and well insulated. Operation personnel must wear proper personal protective equipment (PPE) all the time.
- Violation of any of the above requirements may result in personal injury or equipment damage.

Safety Disclaimer

The BESS has been designed and tested strictly according to international safety regulations. Read all safety instructions carefully prior to any work and observe them at all times when working on or with the BESS. Incorrect operation or work may cause:

- injury or death to the operator or a third party;
- damage to the battery or other properties.

Signs on the Product

 Danger! No live working!	 High voltage inside! Touching may cause electric shock!
 Heavy object. Lifting may cause back injury. Please use appropriate lifting equipment.	 Explosion hazard.
 Corrosion hazard.	 CE marking. EU/EEA importer.
 UKCA marking.	 Do not dispose of it together with household waste.
 A nearby medical facility must be set up.	 In case of eye contact, immediately flush eyes with running water or normal saline and seek medical attention promptly.
 No smoking or open flames.	 Read the manual before performing any operation on the equipment.
 Wear safety goggles.	 The product is recyclable.
 The lithium battery is recyclable.	 The protective earthing (PE) terminal must be connected for reliable grounding to ensure the safety of the operator.

*Users may also attach other warning signs as per the requirements of the local standards or installation specifications.

⚠ DANGER

Explosion Hazard
- Do not subject the battery to strong external impact.
- Do not cause mechanical damage to the battery (e.g., by puncturing, deforming, or disassembling it).
- Do not heat the battery or dispose of it in a fire.
- Do not install the battery in a potentially explosive environment.
- Do not immerse the battery in water or other liquids.

⚠ DANGER

Fire Hazard
- Do not expose the battery to temperatures in excess of 60°C.
- Do not place the battery near heat sources, such as direct sunlight, fireplaces, uninsulated walls exposed to sun, hot water, or heaters.
- Keep ignition sources (e.g., sparks, open flames, and smoking materials) away from the battery.

⚠ DANGER

Electric Shock Hazard
- Do not disassemble the battery.
- Do not handle the battery with wet hands or tools.
- Do not immerse the battery in water or expose it to moisture or liquids.
- Keep the battery out of reach of children and animals.
- Wear PPE such as protective clothing and gloves to prevent direct contact with DC voltage.
- Use insulated tools when working on the battery.
- Before working on DC circuits, ensure you are not wearing any metal accessories.

⚠ NOTICE

Comply with local standards for use with the battery.



More information in the QR code or
at http://support.sungrowpower.com

SUNGROW

Sungrow Power Supply Co., Ltd.
www.sungrowpower.com