SUNGROW
Clean power for all

Three-Phase Smart Energy Meter
Quick Installation Guide
DTSU666-20



Applicability

This manual is applicable to Sungrow Three-phase Smart Energy Meter.

- DTSU666-20

Keep the manual in a convenient place for future reference. The latest manual can be acquired at support.sungrowpower.com.

Target Group

Only qualified personnel with the following skills are allowed to perform the work described in this document:

- Training in the installation and commissioning of the electrical systems.
- Capable of coping with the dangerous and emergency situations during the installation and commissioning.
- Familiar with the country/regional standards and specifications.
- Knowledge of and compliance with this manual and other related documents.

Intended Use

- The Smart Energy Meter is designed for indoor use only. It is a measuring device detecting the electrical values at the grid-connected point. It cannot be used for billing purposes. The data collected by the Smart Energy Meter on the PV power generation may differ from the data of the main Smart Energy Meter.
- Any use other than those described in this document does not qualify as appropriate usage and is prohibited. Do not make any modifications to the product.
- Damage or destruction may be caused to the Smart Energy Meter due to inappropriate usage. The Smart Energy Meter must not be operated beyond the values specified in the technical data.

⚠ DANGER

Lethal voltages and danger to life due to electric shock!

- Only use the Smart Energy Meter in a dry environment and keep it away from liquids.
- Install the Smart Energy Meter in the switch cabinet only and ensure that the connection areas for the line and the neutral conductors are behind an insulating cover or have contact protection.
- Install an external disconnect switch between the Smart Energy Meter and the grid-connection point. The external disconnector must be close to the Smart Energy Meter and easily accessible.
- Disconnect the Smart Energy Meter from voltage sources before cleaning. The Smart Energy Meter must be cleaned with a dry cloth only.

⚠ WARNING

Fire hazard !

- If a fuse is missing or incorrect, a fire may be caused when a fault occurs. This can result in death or serious injury.

Technical Data

Parameters	DTSU666-20
Nominal voltage	230Vac L-N / 400Vac L-L
Input voltage range	50 ... 280Vac L-N / 85 ... 485Vac L-L
Current Transformer(CT)	***[1]/0.333V
Grid frequency	50Hz/60Hz
Operating temperature	-25 ℃ ... +70 ℃
Relative humidity	< 75%（non-condensing）
Dimensions (W x H x D)	118 x 72 x 65.5 mm

[1] *** indicates the input current:

Voltage current transformers are suitable for: 100A, 250A, 400A, 500A.

Delivery Contents

Related components in the scope of delivery:

- Smart Energy Meter (DTSU666-20)
- RS485 cable *
- Quick installation guide
- Current Transformer(CT) **



DTSU666-20

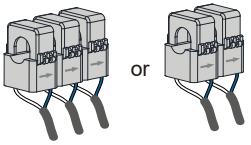

Current Transformer(CT)**

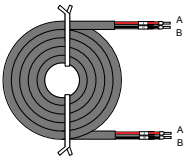

RS485 cable (8m)*



Quick guide

* The RS485 cable is included in the inverter package. If you can not find the cable, please contact SUNGROW.

** The CT (Current Transformer) is included in the accessories shipped with the inverter. There are 3 CTs if the product is sold to the European region and 2 CTs if the product is sold to the Australian region.

NOTICE

Contact SUNGROW or the distributor in case of any damaged or missing components.

Three-phase Smart Energy Meter dimensions

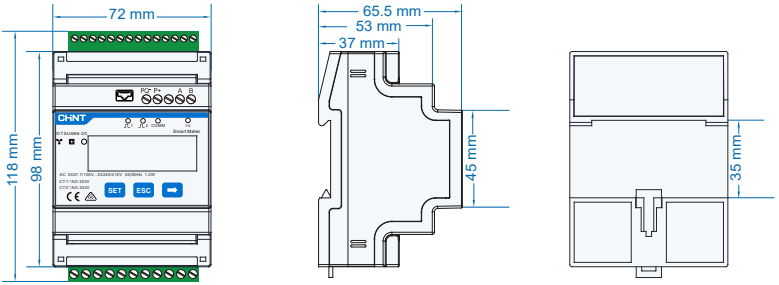

100 A CT dimensions

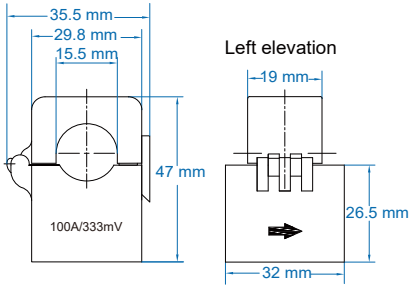

250 A CT dimensions

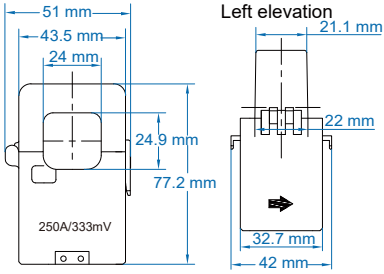

The length of the 100 A CT and 250A CT cables is 8000±20mm.If the CT cable is excessively long, cut it to the appropriate length according to the actual on-site situation.

Three-phase Smart Energy Meter and its terminals

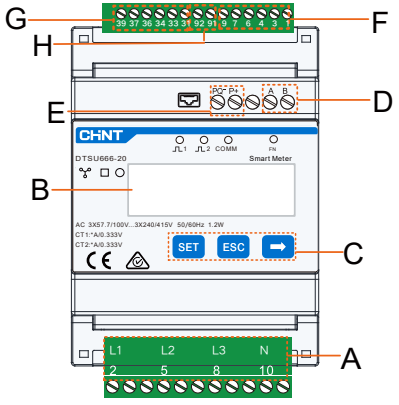

Designation		Description
A	2, 5, 8, 10	Voltage sampling terminals
B	LCD display	Displays active energy and reactive energy, etc
C	Key	SET: confirm the selection or settings ESC: return to a previous menu or cancel the settings →: increase the setting value
D	A, B	Communication terminals
E	PQ-, P+	Reserved
F*	1, 3, 4, 6, 7, 9	CT1 / Coils1 Current Input
G*	31, 33, 34, 36, 37, 39	CT2 / Coils2 Current Input
H	91, 92	Reserved

* Please remove the shorting wires as needed, and remain the wires for those unused

terminals.

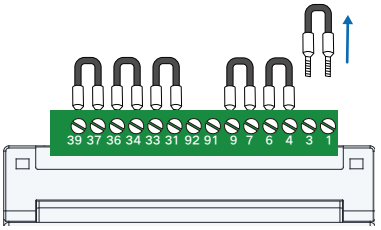

The meter ports are shown as follows, where the CT port is used to connect the CT to detect the current, and L1, L2, L3, N ports are used to detect the voltage.

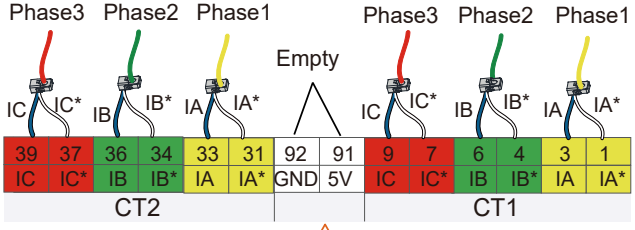

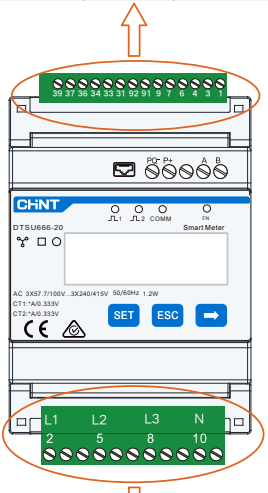

L1			L2			L3			N	
2	X	X	5	X	X	8	X	X	10	X

Phase1 Phase2 Phase3 N Line

X: empty

NOTICE :

If there is only L1(to terminal 2) and the neutral conductor (to terminal 10), then the three-phase Smart Energy Meter can be used as a single-phase Smart Energy Meter.

Installation

Mount the Smart Energy Meter to a 35 mm DIN rail. Hook it into the top edge of the rail and press down until it snaps into place.

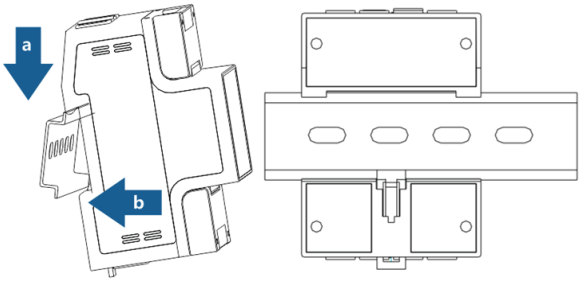

Cable Connection

Step 1 Turn off solar switch, load switch, main switch and other power switches, and secure them against reconnection.

Step 2 Take out the RS485 cable from inverter's packaging.

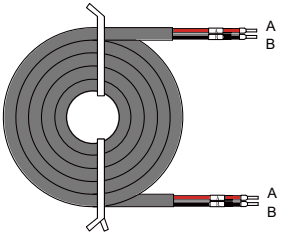

Step 3 Connect the plugs A and B to terminals A and B on the Smart Energy Meter.

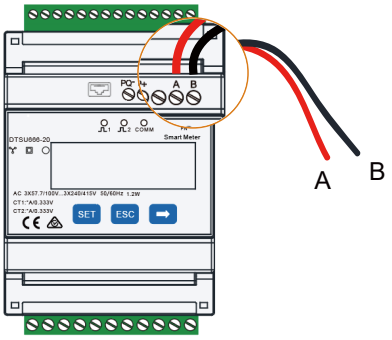

Step 4 Connect wires to the terminals on the Smart Energy Meter, as shown below.

Scenario 1： Three-phase hybrid inverter + Three-phase PV inverter + Three-phase grid

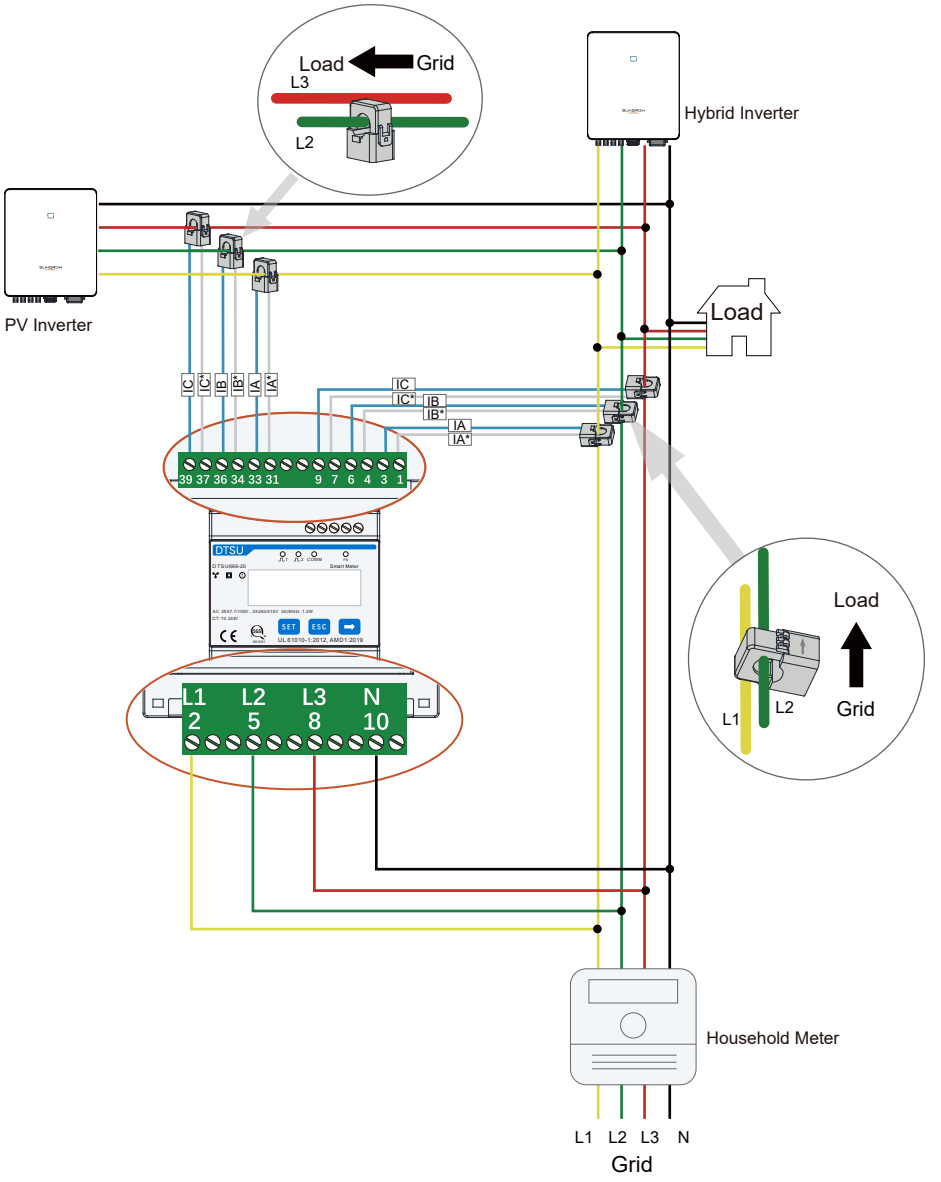

Scenario 2: Three-phase hybrid inverter + Single-phase PV inverter + Three-phase grid

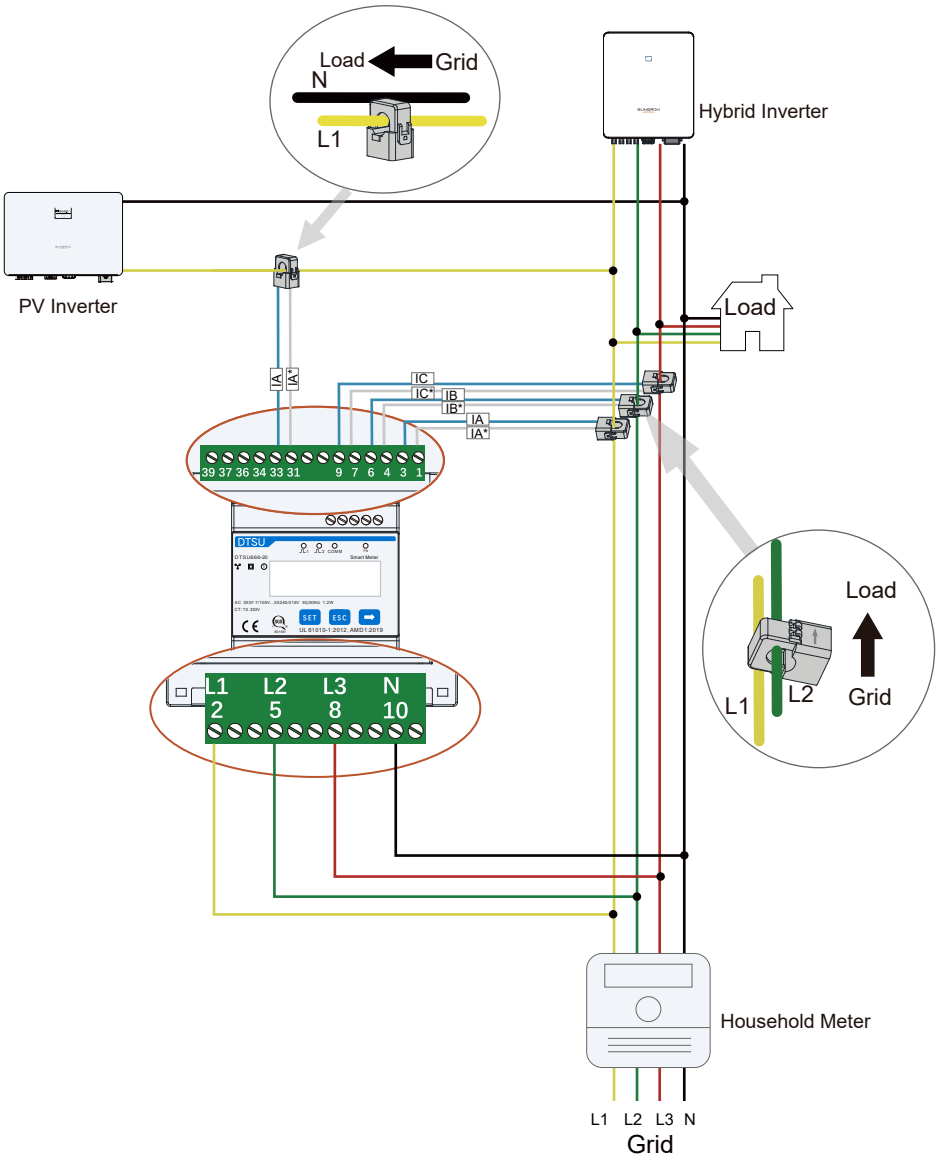

Scenario 3：Single-phase hybrid inverter + Three-phase PV inverter + Three-phase grid

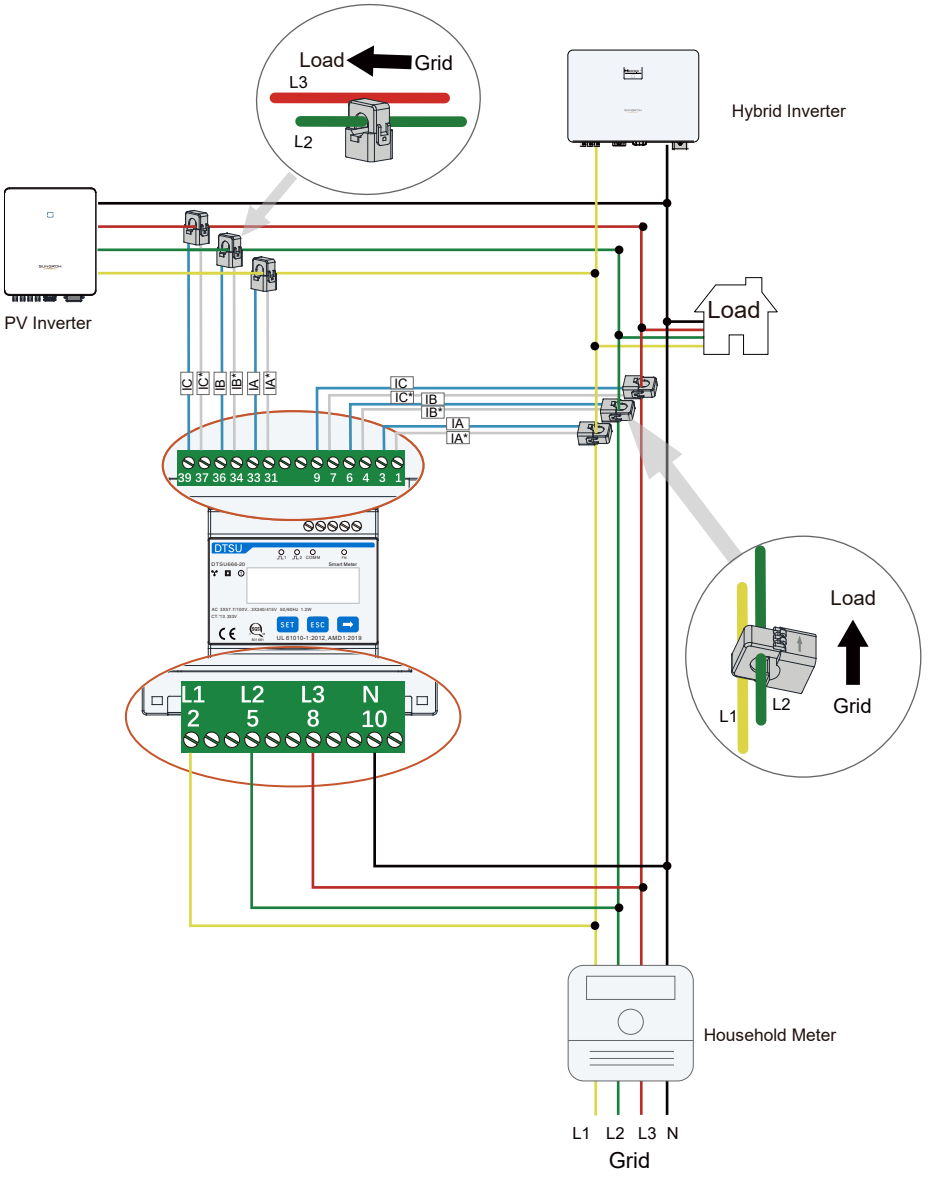

Scenario 4： Single-phase hybrid inverter + Single-phase PV inverter + Three-phase grid

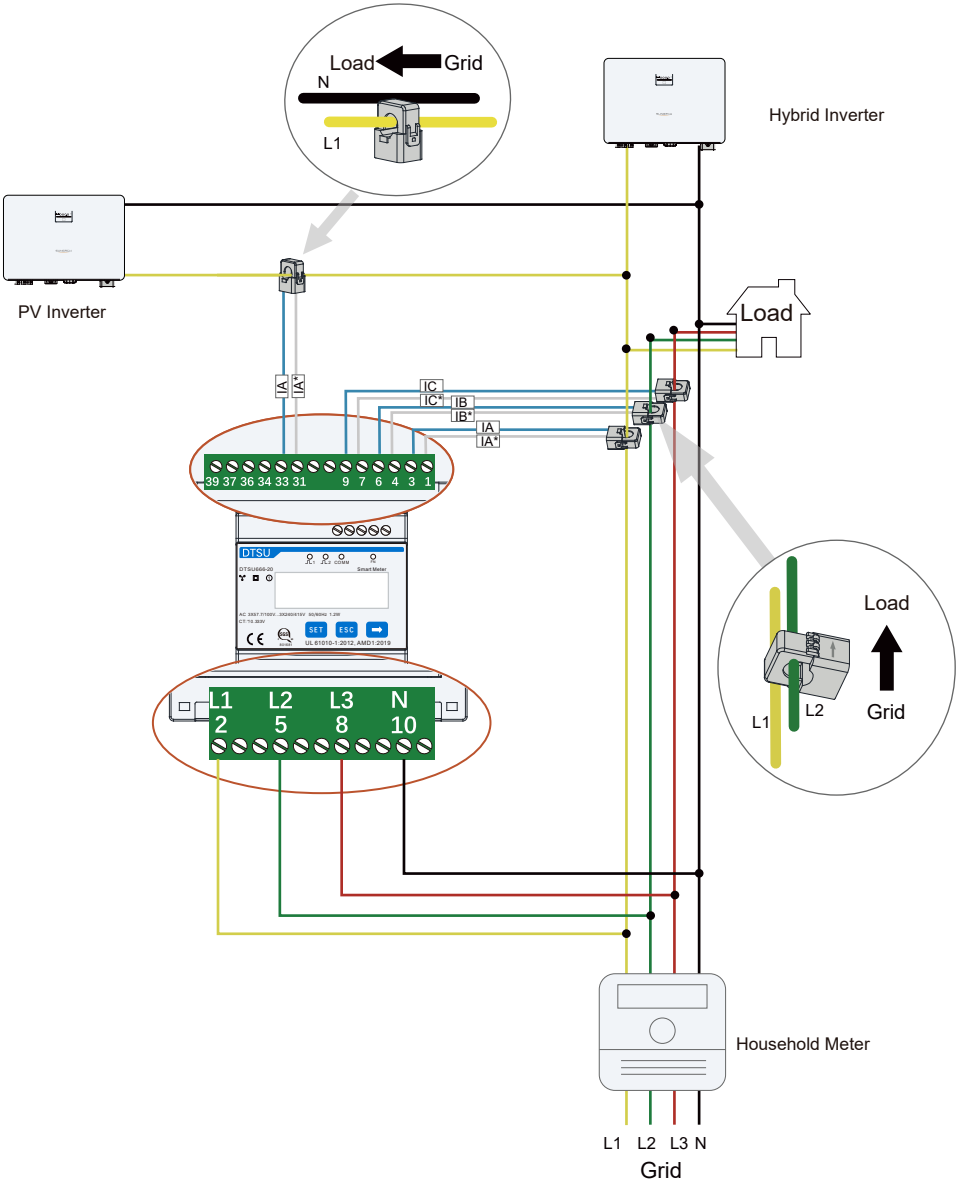

Scenario 5： Single-phase hybrid inverter + Single-phase PV inverter + Single-phase grid

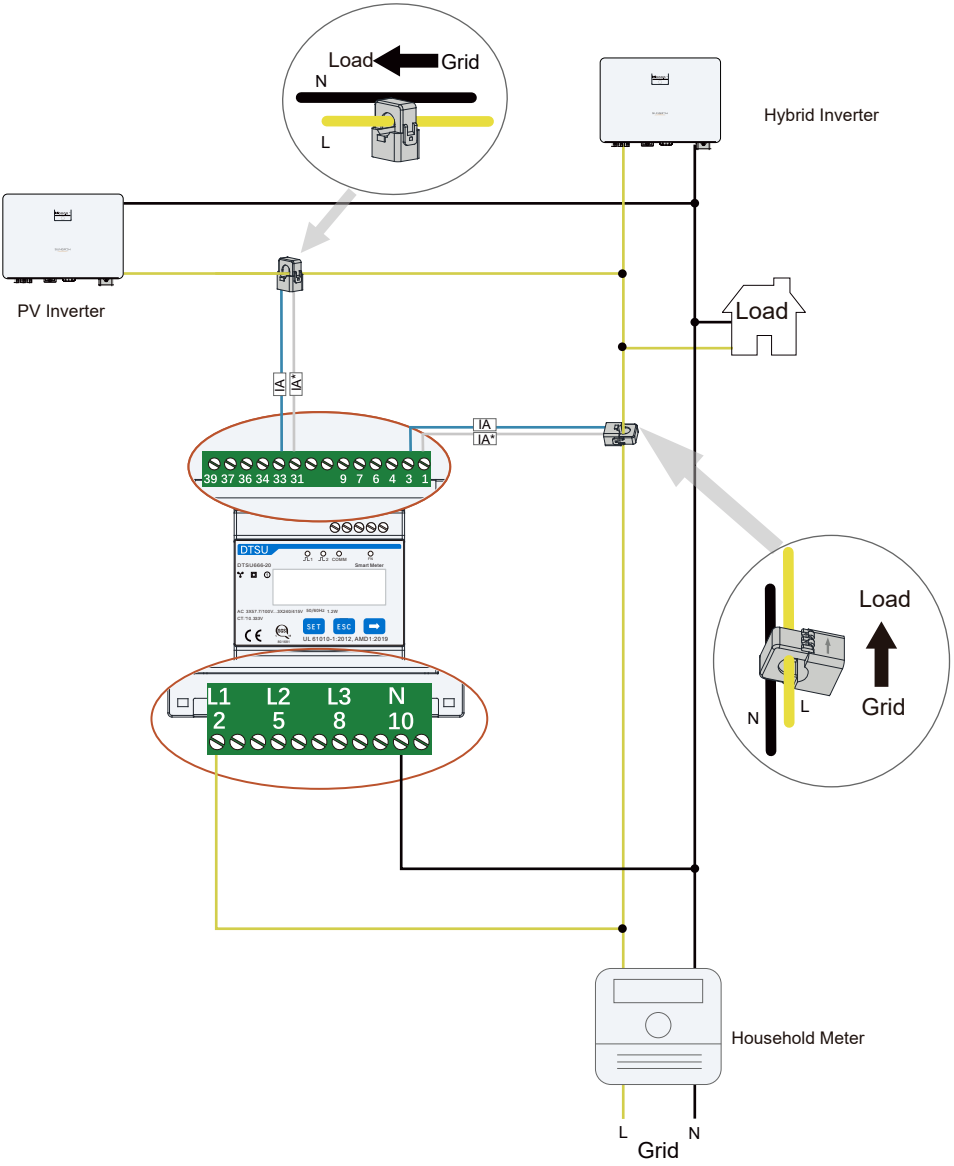

Step 5 After the meter is connected, please check the CT direction and cable installation carefully. The arrow on the CT should always point to the load side.

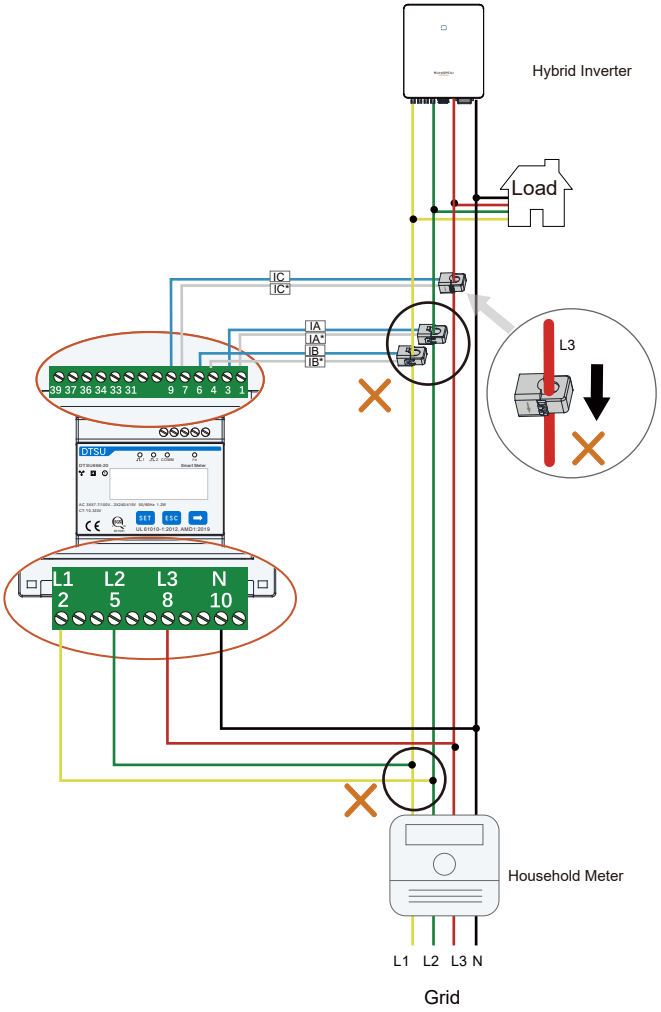

After the meter is connected, please check:

1. Whether the CT direction is correct. The arrow on the CT should point to the load side.
2. Whether CTs are connected to correct cables. The CT corresponding to IA and IA* should be connected to cable L1, the CT corresponding to IB and IB* should be connected to cable L2, and the CT corresponding to IC and IC* should be connected to cable L3.
3. Whether the cables connected to L1, L2, L3, and N terminals of the meter are correct.

Step 6 For inverter cable connection, refer to the user manual of the corresponding inverter.

Step 7 Cover the Smart Energy Meter with the insulating cover or contact protection of the sub-distribution. Switch on the power supply to the sub-distribution.

Displayed function

From the displayed interface, the electrical parameter and energy data are all primary side data (that is, the multiplied by current and voltage ratios). The energy measuring value will be displayed seven bits, with the displaying range from 0.00kWh to 9999999MWh.



No.	Display interface	Instruction	No.	Display interface	Instruction
1	NO. n1 9600	Protocol: Modbus-RTU address=001 Baudrate=9600 None parity, 1 stop bits	16	I FC-0.500	First channel Combined phase power factor PFc=-0.500
2	NO. ----001		17	II UA 220.0 V	Second channel Phase A voltage =220.0V
3	I UA 220.0 V	First channel Phase A voltage =220.0V	18	II Ub 220.1 V	Second channel Phase A voltage =220.1V
4	I Ub 220.1 V	First channel Phase A voltage =220.1V	19	II UC 220.2 V	Second channel Phase A voltage =220.2V
5	I UC 220.2 V	First channel Phase A voltage =220.2V	20	II IA 5.000 A	Second channel Phase A voltage =5.000A
6	I IA 5.000 A	First channel Phase A voltage =5.000A	21	II Ib 5.001 A	Second channel Phase A voltage =5.001A
7	I Ib 5.001 A	First channel Phase A voltage =5.001A	22	II IC 5.002 A	Second channel Phase A voltage =5.002A
8	I IC 5.002 A	First channel Phase A voltage =5.002A	23	II Pt 3.291 kW	Second channel Combined phase active power =3.291kW
9	I Pt 3.291 kW	First channel Combined phase active power =3.291kW	24	II PA 1.090 kW	Second channel Combined phase active power =1.090kW

10		First channel Combined phase active power =1.090kW	25		Second channel Combined phase active power =1.101kW
11		First channel Combined phase active power =1.101kW	26		Second channel Combined phase active power =1.100kW
12		First channel Combined phase active power =1.100kW	27		Second channel Combined phase power factor PFt=0.500
13		First channel Combined phase power factor PFt=0.500	28		Second channel Combined phase power factor PFa=1.000
14		First channel Combined phase power factor PFa=1.000	29		Second channel Combined phase power factor PFb=0.500
15		First channel Combined phase power factor PFb=0.500	30		Second channel Combined phase power factor PFc=-0.500

- The communication address of Modbus protocol is 1 decimal data (1 ~ 254), and the factory default baud rate is 9600bps, N.8.1; E1 means even check one stop bit, O1 means odd check one stop bit, N2 means two stop bits without check, N1 means one stop bits without check.
- When RS485 communicating, the telephone sign will flashes.

Programming function

The parameters of the meter equipped only with 100A/0.333VCT have been set before delivery, and can be installed directly after acceptance, without setting the parameters again, and the meters equipped with the rest of the CT and Rogwski coils need to set their parameters before installation.

Programming Parameter

Parameter	Value range	Description
CT	1 ~ 8	1：CT01:100A/333mV　2：CT02:250A/333mV 3：CT03:400A/333mV　4：CT04:500A/333mV 5：RS01:1000A/333mV　6：RS02:2000A/333mV 7：RS03:3000A/333mV　8：RS04:4000A/333mV
Pt	0.1 ~ 1.0	Voltage ratio, used for setting the voltage ratio of the input loop. When the voltage is connected to the line via the transformer, Pt= the rated voltage of the primary loop / the rated voltage of the secondary circuit. When the voltage is directly connected to the line, Pt shall be set as 1.0.
Prot	1: 645 2: n.2 3: n.1 4: E.1 5: O.1	Settings for communication stop bit and Parity: bits 1: 645mode 2: None parity, 2 stop bits, n.2 3: None parity, 1 stop bit, n.1 4: Even parity, 1 stop bit, E.1 5: Odd parity, 1 stop bit, O.1
bAud	0: 1.200 1: 2.400 2: 4.800 3: 9.600	Communication baud rate: 0: 1.200 bps 1: 2.400 bps 2: 4.800 bps 3: 9.600 bps
Addr	1 ~ 254	Communication address
nEt	0: n.34 1: n.33	Option for wiring mode: 0: n.34 represents three phase four wire 1: n.33 represents three phase three wire
PLuS	0: P0 1: P1	Pulse output: P0: First channel actsive energy pulse P1: Second channel actsive energy pulse
dISP	0 ~ 30	Display in turns(second) 0: Timely display 1 ~ 30: Time interval of actual display
bLCd	0 ~ 30	Backlight lighting time control(minute) 0: Normally light 1 ~ 30: Backlight lighting time without button operation

Programming Parameter

Button description: “SET” represents “confirm” or “cursor shift” (when input digits), “ESC” represents “exit”, and “→” represents “add”. The password is 701 by default.

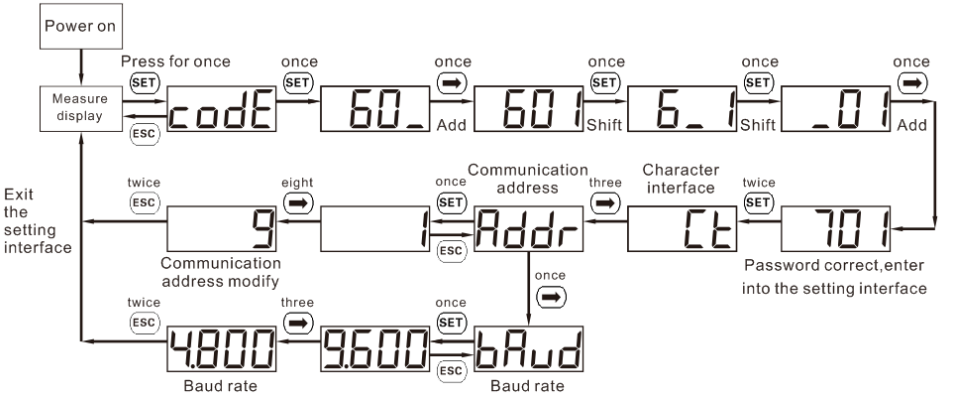

When input digits, “SET” can be used as cursor “ - ”motion button, “➡”is “add” button, “ESC”is Exit the programming operation interface or switch to the character interface from digit modification interface, add from the beginning after setting the digit to the maximum value.

Troubleshooting

Fault phenomenon	Reason analysis	Elimination method
No display after the instrument being powered on	1. Incorrect wiring mode. 2. Abnormal voltage supplied for the instrument.	1. If the wiring mode is incorrect, please connect based on the correct wiring mode. 2. If the supplied voltage is abnormal, please supply the voltage on the instrument specification.
Abnormal RS485 communication	1. The RS485 communication cable is disconnected, short circuit or reversely connected. 2. The address, baud rate, data bit and parity bit of the instrument is not in accordance with the inverter.	1. If any problems for the communication cable, please change the cable. 2. Set the address, baud rate, data bit and parity bit of the instrument to be the same as the inverter through buttons and so as the "parameter setting".
Power metering inaccuracy	1. Wrong wiring, please check whether the corresponding phase sequence of voltage and current is correct. 2. Check whether the high and low ends of the current transformer inlet are reversely connected. Pa, Pb , and Pc are abnormal if the values are negative.	1. For wrong wiring, please connect based on the correct wiring mode. 2. If a negative value is displayed, change the cable connection mode of the current transformer to ensure that the high and low ends are connected properly.