Energy Bank Floor Mount Battery Stand Assembly Guide

Content

Floor Mount Battery Stand Overview **1**
Energy Bank Floor Mount Arrangement and Gross Dimensions 1
Energy Bank Floor Stand Kit Parts List 3
Required Tools 3
Assembling the Energy Bank Floor Stand **4**

Floor Mount Battery Stand Overview

The SolarEdge Energy Bank battery can be floor mounted with each battery secured in a SolarEdge Energy Bank Floor Mount battery stand. The floor mount stand is provided as a kit that is purchased separately from the SolarEdge Energy Bank battery.

This document lists the contents of the SolarEdge Energy Bank Floor Mount stand kit and provides a guideline for assembling the stand and securing the battery on the stand. For convenience you can view a video that guides you through the process.

Energy Bank Floor Mount Arrangement and Gross Dimensions

Where more than one battery is used for a system, multiple floor mount stands can be placed against and secured one to the other to form a battery bank. Figure 1 shows the arrangement of a bank of SolarEdge Energy Bank batteries mounted on floor stands and arranged in a row.

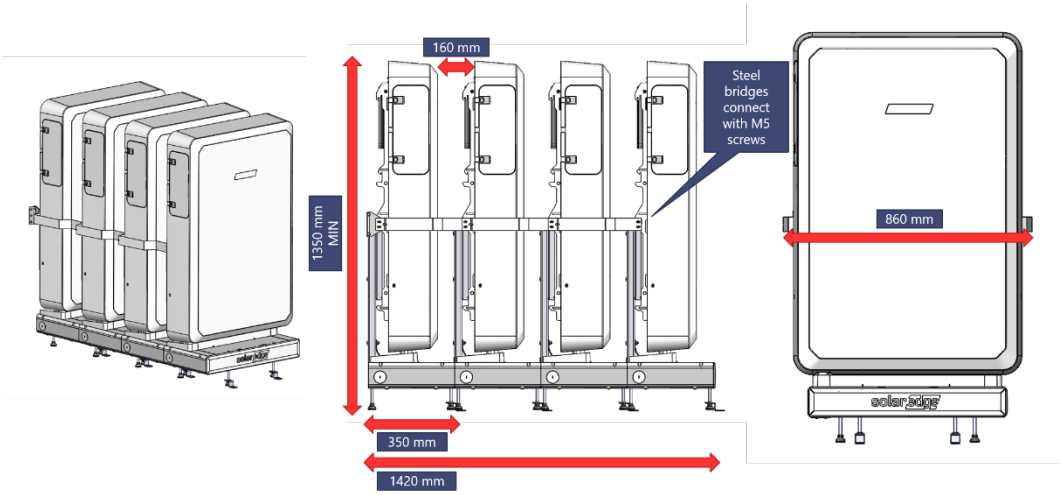

Figure 1: Energy Bank Arrangement – Perspective, Side and Front Views

Table 1: Stand and Mounted Battery Dimensions

Dimension	Minimum Measurement (mm)
Stand and Mounted Battery height	1350
Stand and Mounted Battery Width	860
Stand Depth	350
Space between Mounted Batteries	160

Floor Stand Base Mount and Back Holder

Parts for the Floor Stand Base Mount and Back Holder are supplied as part of the SolarEdge Energy Bank Floor Mount kit.

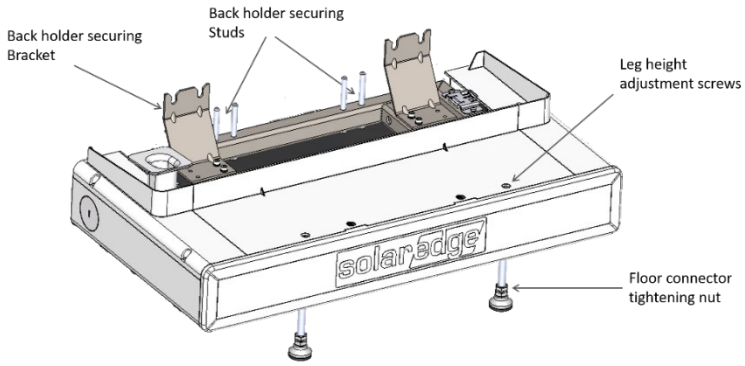

Figure 2: Base mount assembly and securing points

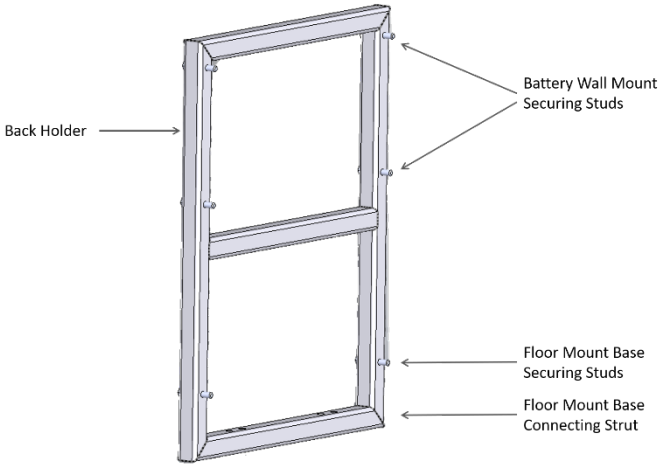

Figure 3: Back Holder

Assembled Floor Stand

The assembled floor stand includes the base and back holder as illustrated on the left in the Figure 4. The right part of the figure shows the Battery Wall Mount after being attached to the assembled floor mount stand.

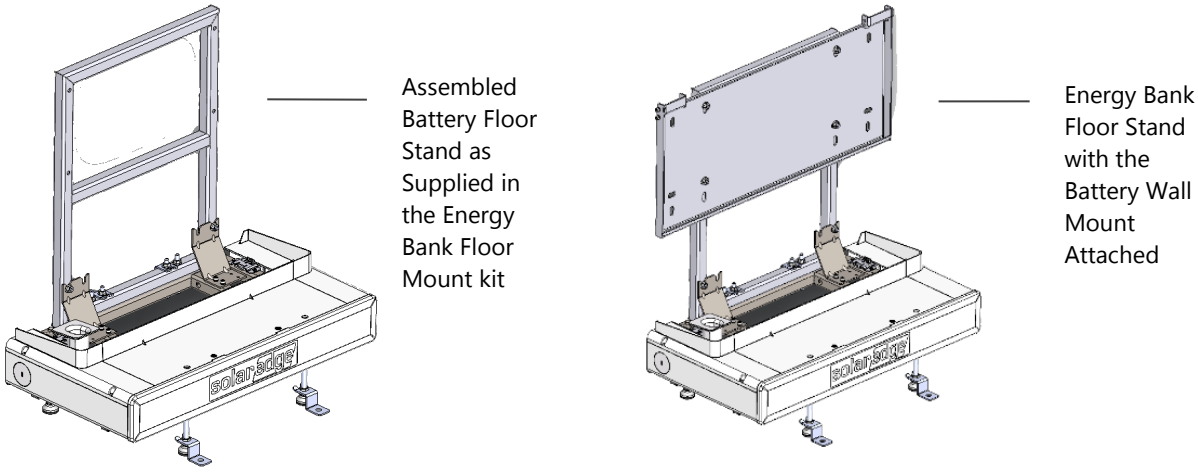

Figure 4: Assembled Floor Stand and Floor Stand with Battery Wall Mount

NOTE

The Battery Wall Mount is distributed togther with the Battery and is not part of the SolarEdge Energy Bank Floor Mount kit.

Energy Bank Floor Stand Kit Parts List

Part Number	Part Name	Part Image	Quantity
TBD	Base Mount	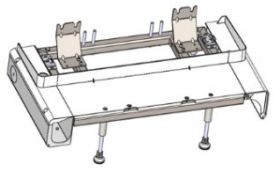	1
MCM-AS-00937-02	Back Holder	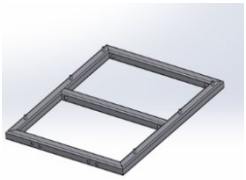	1
MCM-BR-00353-05	Wall Bracket	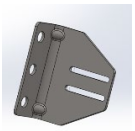	2
MCM-BR-00422-02	Side Bracket	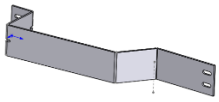	2
MCM-MC-06694-02	Stand to Stand Connector	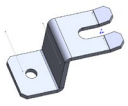	2
MCM-MC-05595-04	Floor Connector (for optional use)	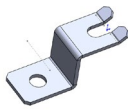	2
MCI-NT-00109	M8 nut		10
MCI-SC-00307	Screw M5x13		6
MCI-SC-01519	Screw M5x80		2
MCI-SC-00077	Screw M5x10		2
MCP-MC-02218	decorative front cover	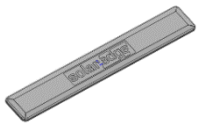	

Required Tools

- Power drill
- Spirit level
- Allen Keys: 5/32", 5/16", 5mm
- Drill bits
- Torque Wrench
- Wrench or Sockets: M8 / 1/2"

Assembling the Energy Bank Floor Stand

1. Unpackage the SolarEdge Energy Bank Floor Mount Stand kit and arrange the parts so you can check the parts against the parts list.
2. Move and position the floor mount base close to but not against the wall to which it will be secured. Position the base so that the front of the base is parallel to and facing away from the wall.
3. Level and set the height of the base mount using a 5mm Allen key to turn the **leg height adjustment screws** for each of floor mount base legs.
4. Hold the back holder so that the six studs are facing toward you and the connecting strut with four holes is at the bottom.
5. Lower the back holder over the four connecting studs located at the rear of the base. As you do this, the two lower studs on the Back Holder must sit in the outer slots of the Back Holder Securing Bracket.
6. Loosely screw the M8 (1/2") nuts onto each of the back holder and base studs to hold the back holder in place. Fully tighten at 17Nm/150 in lb to finally secure the back holder.
7. Hold the wall mount, front facing you, and position the mount on the securing studs of the back-holder's battery mounting bracket.
8. Loosely screw an M8 (1/2") nut onto each of the four back holder studs to hold the wall mount in place and then fully tighten at 17Nm/150 in lb to finally secure the wall mount as shown in Figure 4.
9. Use the M5 (5/32" Allen) short screw to attach the lower slot of the wall bracket to each side of the wall mount and then position the Floor Mount against the wall.

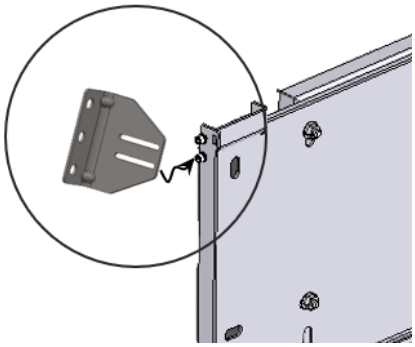

10. Use the holes in the wall bracket to mark the position on the wall for three attachment holes on each side. Move the Floor Mount aside to allow access to drill. Drill the holes, reposition the Floor Mount and attach the wall brackets to the wall.
11. (Optional) Insert a floor connector bracket between the bracket securing nut and the foot of each leg. Position the floor connector bracket and mark a drilling hole. Remove the bracket and drill the floor attachment holes.

CAUTION!

Attaching the Floor Connector Brackets is optional. This step should be only be performed after determining that doing so does not:

- Breach any local or national safety codes.
- Damage any infrastructure built into the floor. For example, sealing, plumbing lines or floor heating systems.

12. Position and hang the battery on the wall mount.
13. Check that the battery is turned off.
14. Open the wiring gutter on the left side of the floor mount base and lay the wires in place. Pass the cables through the wiring sleeve on the top left side of the floor mount base and connect to the battery. If installing more than one battery per inverter, use branch connectors. See the Energy Bank Quick Installation Guide.
15. Insert and loosely tighten the long m5 wall bracket securing screw in the upper wall bracket slot on each side. The long securing screw threads through the battery housing and acts a safety suspension pin.
16. Recheck that the stand is level and if necessary fine tune the height of the legs until the stand is level.

17. In case the floor stand is being optionally fastened to the floor, replace the floor connector brackets, and position them over the drilled hole. Secure to the floor at 17Nm/150 in lb and then tighten the M10 (11/16") bracket securing nuts on each leg also at 17Nm/150 in lb.
18. Tighten the two Wall Bracket screws M5 (5/32" Allen) on each wall bracket at 17Nm/150 in lb.
19. Assemble the decorative cover.
20. If installing more floor stands arranged front to back , position the additional base mount against the front of the already positioned base mount and repeat the floor mount assembly process for steps 1-8. The figure indicates how the batteries are arranged and attached to each other.

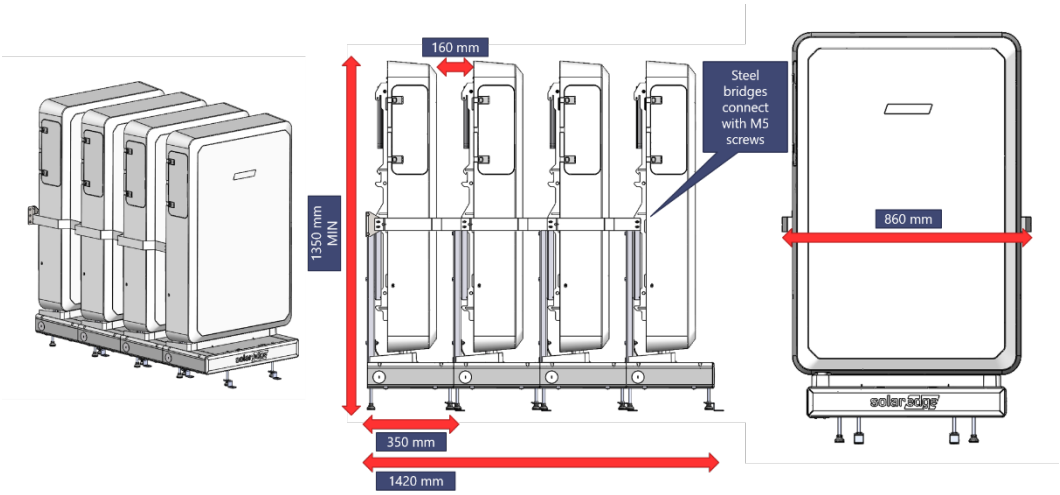

21. Attach the Stand to Stand connectors from the front of the rear base mount to the two internal base mount studs and tighten the M8 (1/2") nuts to secure the front base mount to the rear base mount.
22. Disregard the steps that refer to the wall bracket and continue from step 11 to mount the battery, wire the battery, attach the decorative cover, and then secure the two batteries to each other using M5 screws to attach a side bracket to each side of the battery.
23. You can reverse the positioning of the floor connector bracket for the last floor stand in the bank so that the connector is hidden under the front of the stand. This prevents the floor connector bracket from getting in the way of anyone walking around the battery stand. This step is optional, see the caution Optional Floor Connector.
24. Clip the gutter cover to the base.
25. Screw the front decorative logo to the base.

Note

Use the QR-Code to view a video that shows you how to wire and chain up to 3 batteries together on floor stands.