Emergency Response guide, including emergency phone numbers

Safety Datasheet

For information on installing a battery with a fire extinguisher

Support Contact Information
In case of any technical issues with SolarEdge products, please contact us at:
https://www.solaredge.com/service/support

© SolarEdge Technologies, Ltd.
All rights reserved.
Version: 1.2, September 2024
Subject to change without notice.

Quick Installation Guide

Version 1.2

SolarEdge Home Battery 400V

for use with SolarEdge Inverters

Europe

What's in the Package

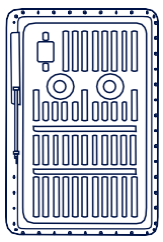
SolarEdge Home Battery

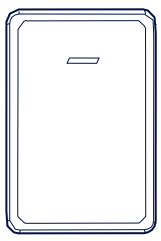
Decorative cover

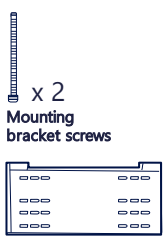
x 2 Mounting bracket screws

Mounting bracket


MC4 connectors


x 2 Cover screws


Conduit holder

The SolarEdge Home Battery 400V can be added to your SolarEdge All-in-One residential systems. This battery is intended for storing excess solar production and delivering backup power.

WARNING!
This symbol on the product or in the accompanying documentation denotes a hazard. It calls attention to a procedure that, if not correctly performed or adhered to, could result in injury or loss of life. Do not proceed beyond a warning note until the indicated conditions are fully understood and met.

WARNING!
Before installing or operating the SolarEdge Home Battery (referred to as the "Battery"), read the Safety and Handling instructions at the back of this page.

Required Personnel and Tools


Min 2 qualified installers


MC4 crimper 8/10/12 AWG


Drill


x 4 Handles (available from SolarEdge)

Level


min 2 Mounting screws - max M10


DC cable 600V insulated


Dolly with lift and ratchet straps

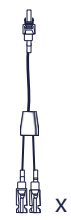
x 2 Branch connectors (optional, available from SolarEdge)

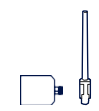
SolarEdge Home Network plug-in (available from SolarEdge)

Torque wrench

Phillips screwdriver


Long-nose pliers

1 Install mounting bracket

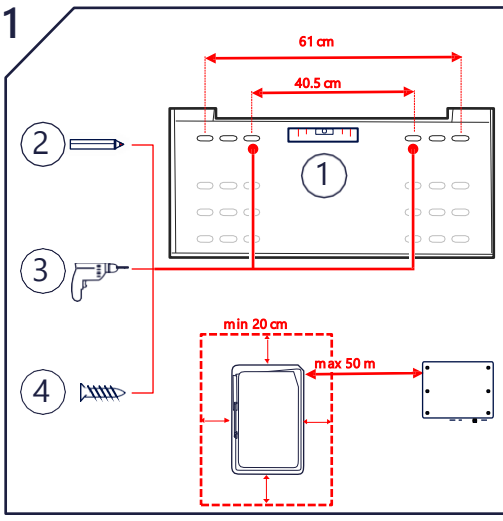

When selecting the installation location:

- Maintain a clearance of min 20 cm from other objects.
- Make sure the max distance from the inverter is max 50 m.

Make sure the installation surface sustains the weight of the battery (121kg).

1. Level the bracket.
2. Mark two drilling spots.
   Use either the inner or outer pair of holes.
   If necessary, you can use the additional holes to secure the bracket.
3. Drill holes in the installation surface.
4. Install the mounting bracket and secure with screws.

2 Transport battery

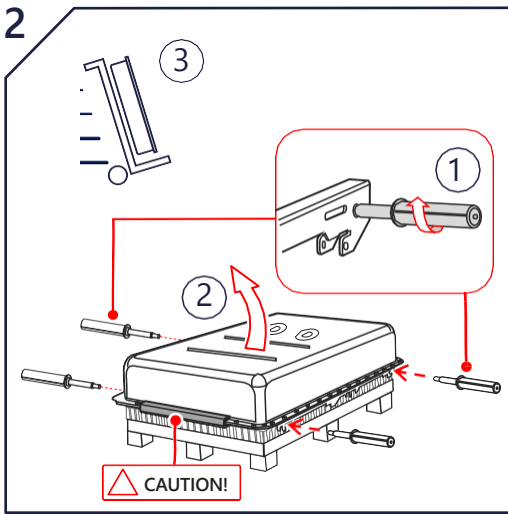

1. Screw in all FOUR handles to the battery frame.
   Make sure to screw in the handles all the way.

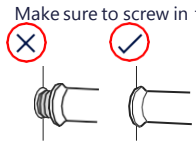

Do not use a bent, cracked, or otherwise damaged handle.

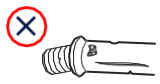

2. Place the battery upright on a dolly and secure it with straps.
   Caution!
   Stand the battery on the rubber protector only!
3. Transport the battery to the installation location.

3 Hang battery on mounting bracket

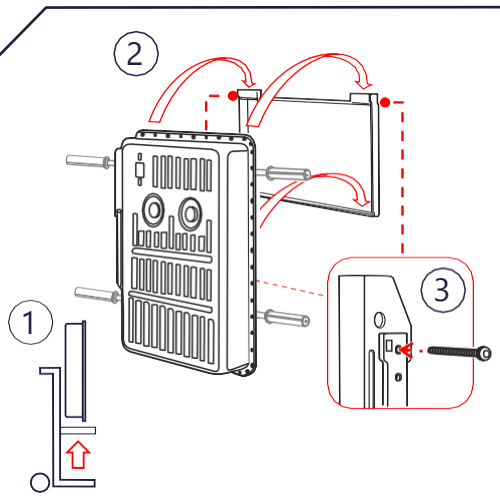

1. Lift the battery to the height of the mounting bracket.
2. Hang the battery on the mounting bracket, while holding it by the handles.
3. Secure with a mounting bracket screw (supplied) on each side. Apply a torque of 42 in-lbs/4.7N*m.

4 Prepare cables

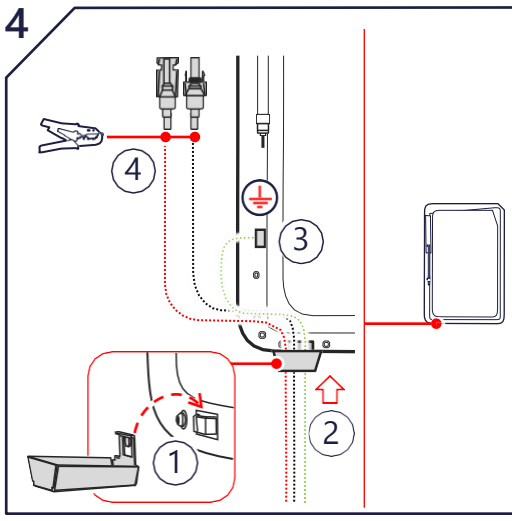

1. Mount the conduit holder.
2. Pass the DC cables and grounding cable through the conduit holder at the bottom of the battery.
3. Connect the grounding cable to the grounding terminal with a torque of 66 in*lbs/7.5 N*m.
4. Crimp the DC cables to the MC4 connectors (supplied) and tighten the MC4 connector glands with a torque of 30 in*lbs/3.4N*m.

5 Connect to inverter

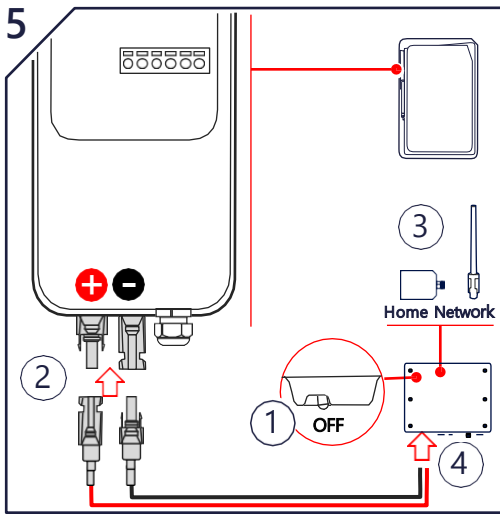

1. Make sure the inverter is OFF.
2. Connect the DC cables to the DC+ and DC- inputs. Observe correct polarity.
3. Install the SolarEdge Home Network plug-in and antenna in the inverter.
   See the installation guide:
4. Connect cables to the inverter.
   See the Connection and Configuration application note.
5. For multiple SolarEdge Home Batteries connection, see Connecting the Home Hub Inverter and the Home Wave single-phase Inverter to multiple 400V Home Batteries

6 Power on and associate

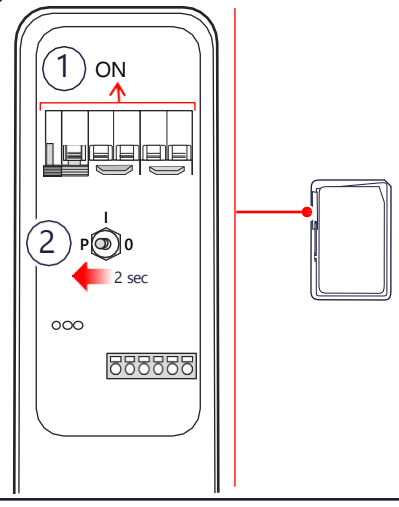

1. To power on and operate the battery, turn on the DC circuit breaker, and set the P/1/0 switch to "**1**" (ON).
2. To associate with the inverter, hold the battery's P/1/0 switch to **P** for 2 seconds and then release.

NOTE!
To power OFF the battery, follow these steps:
1. Set the P/1/0 switch to "0" (OFF).
2. Turn off the DC circuit breaker.

IMPORTANT NOTE!
If the inverter is turned off or in fault state, make sure to turn off the battery to maintain its lifetime.

7

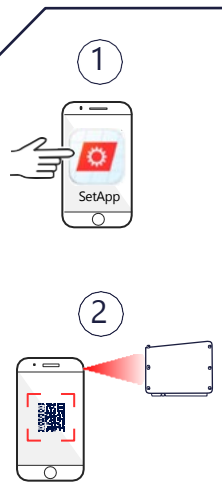

Configure installation

1. Run SetApp.
2. Scan the QR code on the inverter.
3. Follow the on-screen instructions.

For post-installation settings, see **Connection and Configuration** application note.

The battery operation is managed by the SolarEdge inverter connected to the battery.

8

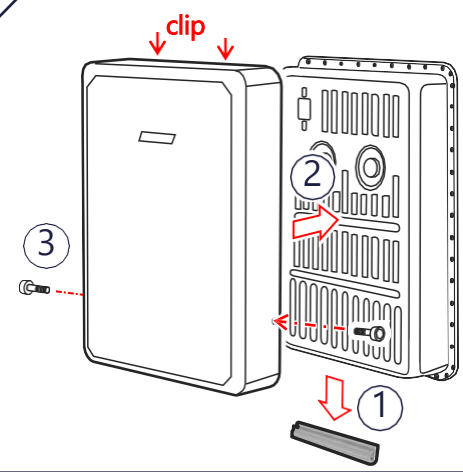

Mount decorative cover

1. Remove the rubber protector.
2. Mount the decorative cover. Make sure the cover clips to the battery frame, where shown.
3. Fasten the cover with two bolts (supplied).

LED Indications

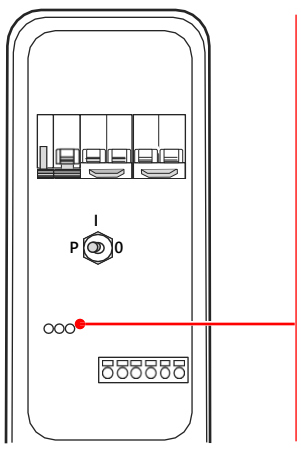

Power	Comm	Fault
Blinking Charge/discharge	**ON** Network comm OK	**ON** Fault
Flickering Standby/DC pairing	**Blinking** Searching for network	**Fast Blinking** FW update

All LEDs ON
Boot/Reset

SAFETY AND HANDLING INSTRUCTIONS

Read this entire document before installing or operating the SolarEdge Home Battery (referred to as the "Battery"). Failure to do so or to follow any of the instructions or warnings in this document can result in electrical shock, serious injury, or death, or may damage the Battery and other property.
Do not discard this document! After installation, keep it adjacent to the Battery for future reference!

Installation

- Install the battery according to national and local codes and standards and in locations compliant with local building codes and standards.
- The Battery installation must be carried out only by qualified electricians who have been trained in handling low voltage electricity works.
- The Battery is heavy. Adhere to local regulations for material handling and heavy lifting, when installing heavy equipment.
- Do not install the Battery in habitable spaces, including sleeping rooms.
- Make sure the mounting surface can sustain the total weight of the Battery and mounting bracket.
- Do not install the Battery, if it has been dropped, crushed, or has signs of physical damage.
- When the Battery is installed in a residential environment, fire detection and protection equipment must be installed in accordance with local building and fire codes.
- Do not install the Battery near heating equipment, ignition sources, or open flames.
- Install the Battery only on non-combustible surfaces and under non-combustible ceilings, overhangs, or eaves.
- Do not install the Battery in proximity to gas meters, valves, regulators, lines, or gas appliances. Follow local codes. However, 2m / 6ft or more spacing is highly recommended. A failing battery may ignite flammable gasses resulting in property damage, serious injury, or death.
- Avoid installing the Battery in direct sunlight.
- Install the Battery in a location protected from flooding.
- Do not install the Battery in the vicinity of water sources, including downspouts, sprinklers, or faucets.
- When installing the Battery in a garage or near vehicles, keep it out of the driving path. If possible, install the Battery on a side wall and/or above the height of vehicle bumpers.
- Before beginning the wiring, ensure that the Battery is switched off. Also, make sure that the DC safety switch of all inverters in the PV system is turned off.

Operation

- The Battery contains rechargeable lithium-ion cells that are potentially hazardous and can present a serious fire hazard, injury and/or property damage if damaged, defective or improperly used.
- In case of an electrolyte leak from the Battery, avoid contact with electrolyte and follow the instructions in the *SolarEdge Home Battery – Emergency Response Guide.*
- Use the Battery only as directed in this document.
- Do not use the Battery if it is defective, appears cracked, broken, or otherwise damaged, or fails to operate.
- The Battery and its components are not user-serviceable.
- Do not attempt to open, disassemble, repair, tamper with, or modify the Battery. The Battery cells are not replaceable.
- Do not operate the Battery at ambient temperatures of above 50°C or below -10°C.
- Do not expose the Battery or its components to direct flame.
- Do not store or use flammable liquids or gasses in the vicinity of the Battery.
- Do not place any combustible items in the vicinity of the Battery.
- If the Battery catches fire, or if fire breaks out near the Battery, call the fire department immediately and follow the instructions in the *SolarEdge Home Battery – Emergency Response Guide.*
- The Battery is prone to re-ignition after extinguishing. Use caution and follow the emergency response instructions.
- Do not immerse the Battery or its components in water or other fluids.
- Charge and discharge voltage: 350-450 V_{DC}.
- Operating the Battery in temperatures outside the specified range might cause damage to the Battery.
- Do not use solvents to clean the Battery, or expose the Battery to flammable or harsh chemicals or vapors.
- Do not use fluids, parts, or accessories other than those specified in this guide, including use of non-genuine SolarEdge parts or accessories, or parts or accessories not purchased directly from SolarEdge or a SolarEdge certified party.
- After the installation, do not place the Battery in storage conditions for more than one (1) month, or permit the power feed to the Battery to be discontinued for more than one (1) month.
- Do not paint any part of the Battery, including any internal or external components such as the exterior shell or casing.
- Ensure that snow does not accumulate around the Battery.
- A non-functioning Battery must be handled with caution. The Battery state of charge and risk of venting may be unknown. Contact SolarEdge for assistance.
- Do not attempt to remove or transport a damaged or non-functioning battery. Contact SolarEdge or your SolarEdge certified installer for support.
- This symbol on the product means: Do not dispose of this product with general household waste. Consult your local regulations for proper disposal instructions.

Emission Compliance

The Battery has been tested and found to comply with the limits for a Class B digital device, pursuant to part 15 of the FCC Rules in the United States, and local regulations in other countries.

The Battery contains FCC ID: 2AGPT-ENET, IC: 20916-ENET.

These limits are designed to provide reasonable protection against harmful interference in a residential installation. The Battery generates, uses and can radiate radio frequency energy and, if not installed and used in accordance with SolarEdge's instructions, may cause harmful interference to radio communications. However, there is no guarantee that interference will not occur in a particular installation. If the Battery does cause harmful interference to radio or television reception, which can be determined by turning the Battery off and on, you are encouraged to try to correct the interference by one or more of the following measures:

- Reorient or relocate the receiving antenna.
- Increase the separation between the Battery and the receiver.
- Consult the installer or an experienced radio/TV technician for help.

Changes or modifications not expressly approved by SolarEdge for compliance may void the user's authority to operate the Battery.