Scan for updates:

IMPORTANT! Always check this QR code for the latest version of this guide

Scan for mounting and wiring video:

Scan for Backup Interface commissioning:

Scan for Backup Interface commissioning video:

Scan for Backup Interface datasheet:

Support Contact Information
In case of any technical issues with SolarEdge products, please contact us at:
https://www.solaredge.com/service/support

© SolarEdge Technologies, Ltd.
All rights reserved.
Version: 1.7, May 2026
Subject to change without notice.

MAN-01-00988-1.7

Quick Installation Guide

SolarEdge Home Backup Interface, Three Phase

BI-EU3P

for use with the SolarEdge Home Hub Inverter Three Phase and the SolarEdge Nexis Inverter - 3ph

What's in the Package

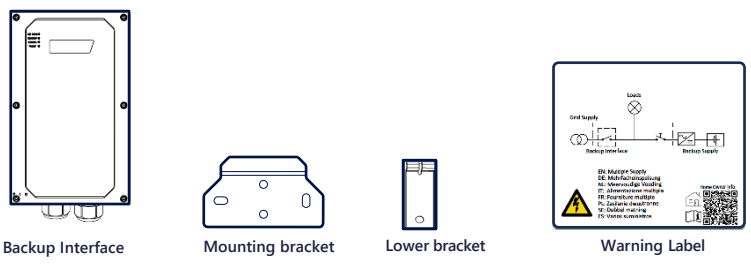

Required Tools

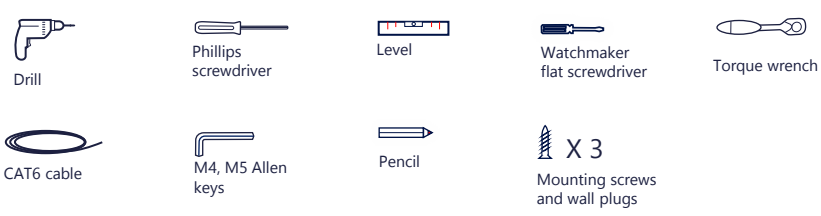

SAFETY AND HANDLING INSTRUCTIONS

- Read this entire document before installing or operating the Backup Interface (also referred to as BUI). Failure to do so or to follow any of the instructions or warnings in this document can result in electrical shock, serious injury, or death, or may damage the Backup Interface and other property, it can also lead to warranty void.
- Do not discard this document! After installation, keep it adjacent to the Backup Interface for future reference!
- Before operating the Backup Interface and inverter, ensure that they are properly grounded. The Backup Interface and inverter must be connected to a grounded, metal, permanent wiring system, or an equipment-grounding conductor must be run with the circuit conductors and connected to the equipment grounding terminal or lead.
- Opening the Backup Interface and repairing or testing under power must be performed only by qualified service personnel familiar with the Backup Interface.

WARNING!
The backup systems generate power to the home when the grid is off or when the main circuit breaker is also OFF. Please make sure to attach the warning sticker (of Dual Supply warning) in a visible place at the main circuit cabinet. For additional safety, we recommend installing an external shutdown press button to make sure the Inverter is also turned off when the main circuit breaker is off.
For installation instructions please refer to the Inverter installation guide.

BACKUP POWER DESIGN GUIDE

The design of backup power is limited only to **the SolarEdge Home Hub Inverter Three Phase**, operating as a backup Inverter, and the availability of a standard code three phase grid (not a generator). The backup system cannot operate as an OFF-grid-only system.

The following design configuration options are available:

- Full House Backup (FHB) – In this configuration, all home loads can operate in backup mode and are limited to the Inverter power during Backup.
- Partial House Backup (PHB) - In this configuration, only part of the home loads can operate in backup mode and are limited to the Inverter power during Backup.

For detailed design and configuration options, refer to: https://knowledge-center.solaredge.com/sites/kc/files/se-home-hub-inverter-three-phase-connection-and-configuration-options-eu.pdf

WARNINGS!
This symbol on the product or in the accompanying documentation denotes a hazard. It calls attention to a procedure that, if not correctly performed or adhered to, could result in injury or loss of life. Do not proceed beyond a warning note until the indicated conditions are fully understood and met.

This symbol on the product denotes risk of electric shock due to stored energy. Before handling the product, wait for at least 5 seconds after disconnecting it from all sources of energy.

DANGER!
It is forbidden and dangerous to open the upper section. Use only the lower section for interface connections.
Before opening the covers and connecting the grid, please make sure that the main CB and the Inverters are OFF.

Main connection scheme

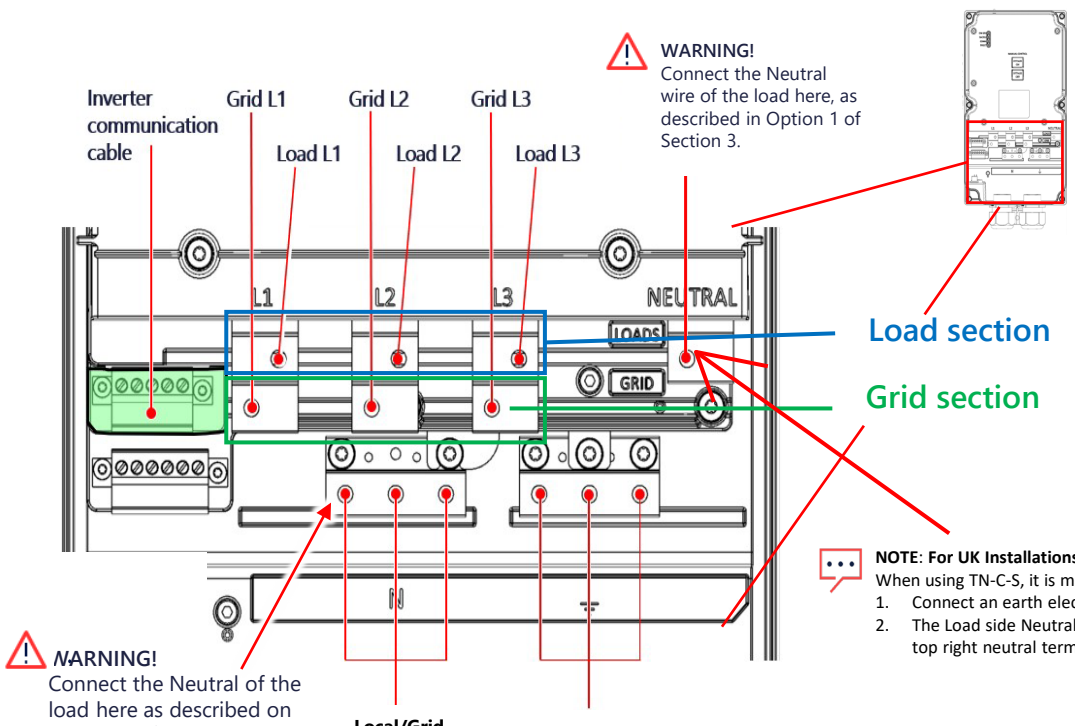

WARNING!
Connect the Neutral wire of the load here, as described in Option 1 of Section 3.

WARNING!
Connect the Neutral of the load here as described on Option 2 of Section 3.

NOTE: For UK Installations:
When using TN-C-S, it is mandatory to:
1. Connect an earth electrode to MET.
2. The Load side Neutral must be connected to the top right neutral terminal.

Local/Grid neutral connectors

Ground Connection

Bottom interface of the Backup Interface

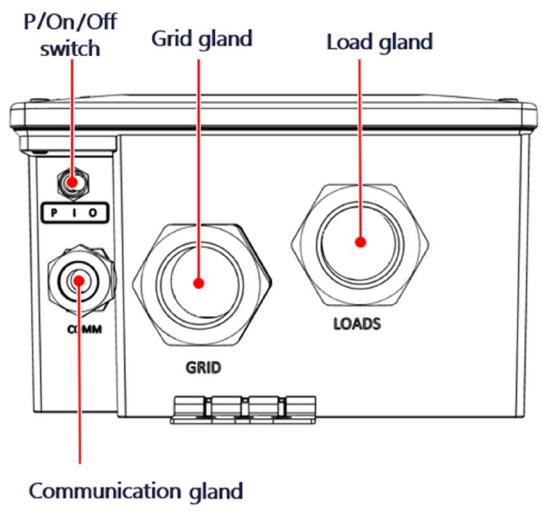

1 Mounting the Backup Interface

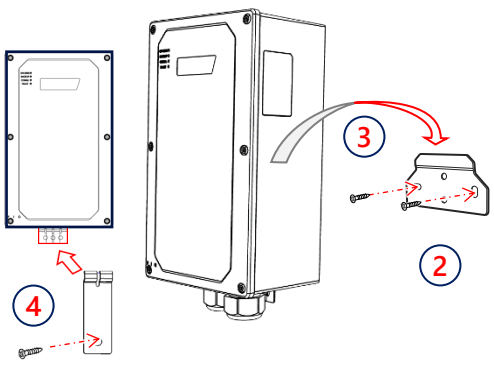

1. Select an installation location. Make sure you have enough space between the Backup Interface and other objects to securely access all its interfaces.
2. Install the mounting bracket to the wall and secure it with 2-4 screws. If using only 2 screws, use left and right ones.
3. Hang the Backup Interface on the mounting bracket.
4. Hang the lower bracket on the hook behind the bottom glands, secure it to the wall with a screw.

2 Removing the covers

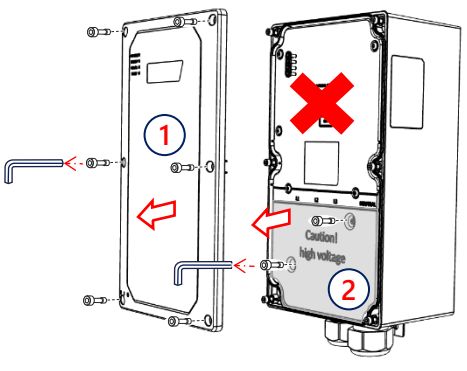

DANGER!
It is forbidden and dangerous to open the upper section.
Use only the lower section for interface connections.
Before opening the covers and connecting the grid, please make sure that the main CB and the Inverters are OFF.

1. Using M5 Allen key, release six screws and remove the Backup Interface front cover.
2. Using M4 Allen key, release two screws and remove the Backup Interface internal lower cover.
3. Make sure the ON/OFF switch is in the OFF position.

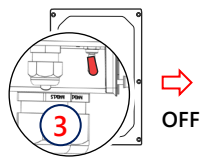

3

1 Grid Connection

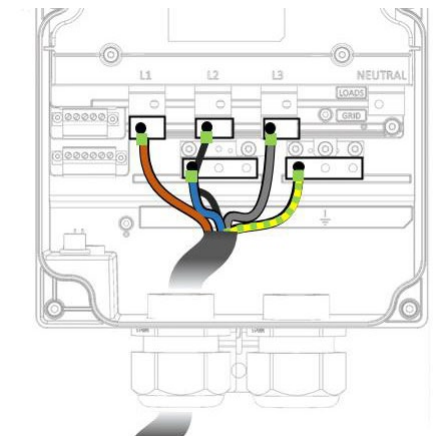

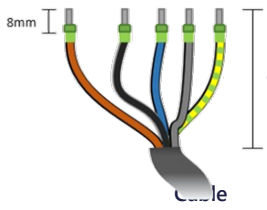

Note: Strip the ground/load cables to 12-150mm

Cable

Outer diameter of 25-32mm

Cable cross section of 6-16mm²

Scan for the Home Hub inverter installation guide

2 Load Connection

Option 1 Load connection

UK- With a TN-C-S supply and the SolarEdge backup interface, connected to the top right on the diagram.

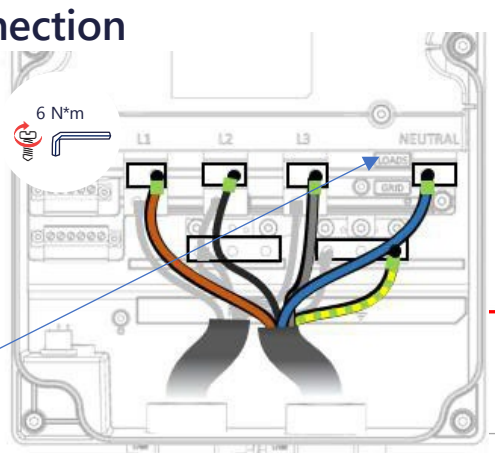

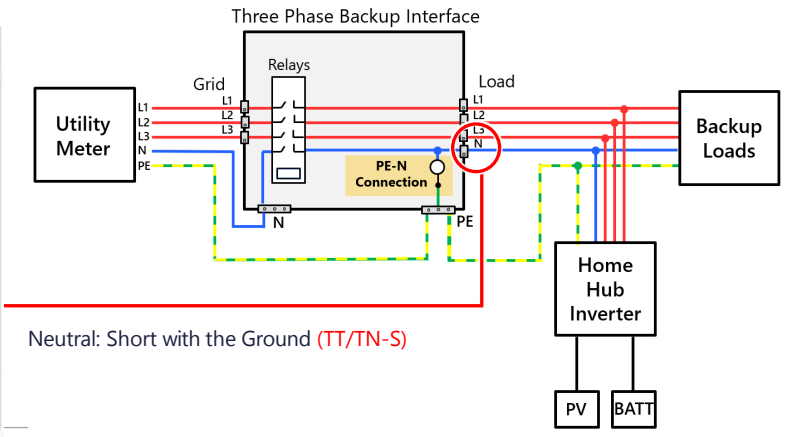

Option 2 Load connection

Note: Only for phase conductor disconnection in backup (no starpoint creation).

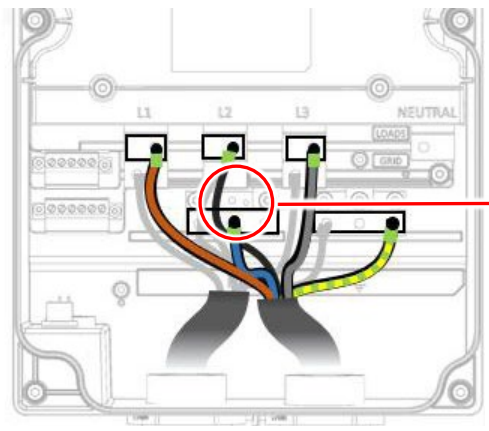

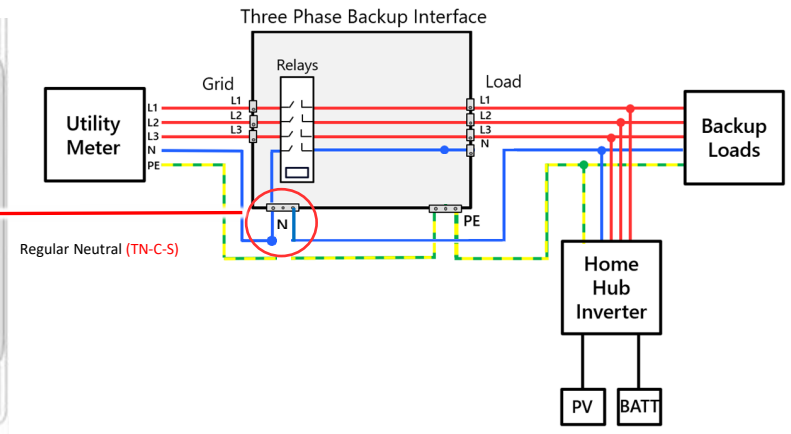

Connection in Specific Countries

UK

TN-C-S: You MUST install an earth electrode to the MET. The load's neutral must be connected as in **Option 1**. Never use Option 2 in UK

PL

SE

TNC: where permitted connect as follows:

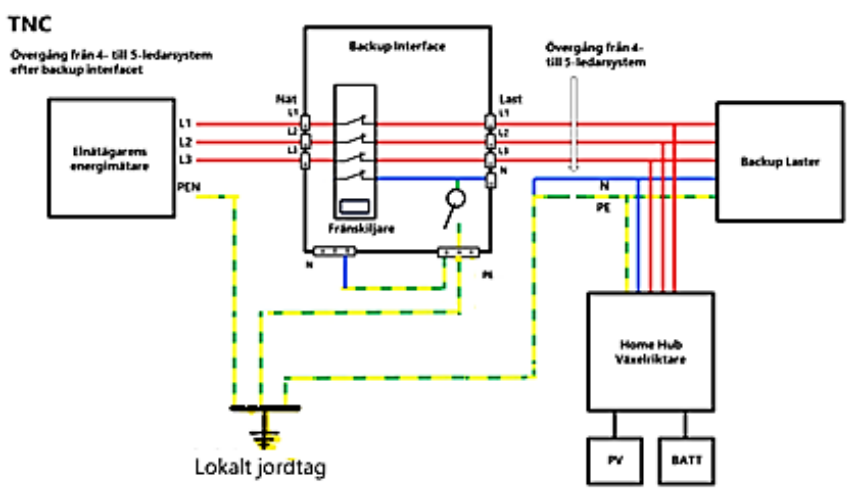

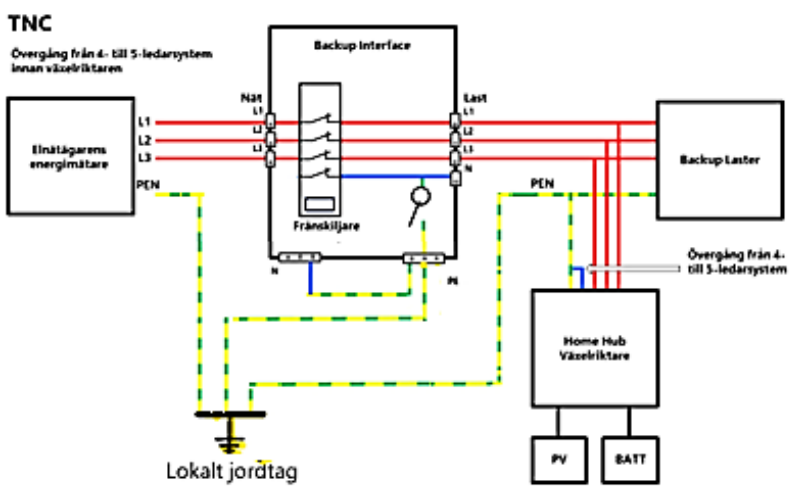

TN-C-S: Use Option 2, if only the phase conductors may be disconnected in island operation.

TT/TN-S: Use Option 1, if the neutral conductor (N) is required to be connected to the protective earth conductor (PE) in island operation (star point simulation).

Rest of Europe

TN-C-S: Use Option 2, if only the phase conductors may be disconnected in island operation (in accordance with VDE-AR-E 2510-2 for Germany).

TT/TN-S: Use Option 1, if the neutral conductor (N) is required to be connected to the protective earth conductor (PE) in island

Connecting the Backup Interface

DANGER!

1. Before opening the covers and connecting the grid, ensure that the main CB and the Inverters are OFF.
   NOTE For specific country grid codes, see the Grid Connection in Specific Countries section shown above.
2. Strip 120-150mm around the external **load** and **grid** cables, and 8mm from the internal wire insulation. If needed, crimp the wire ferrules. Open the left gland marked with Grid and insert the grid cable. **Connect the ground wire first**. Torque – 6Nm. Connect the wires Ground (yellow) Line (brown) and Neutral (blue) to their respective terminals.
3. Connect the Backup Interface to your inverter using a CAT5 E or a CAT6. Open the communication gland and insert the communication cable, close the gland. Pull out the communication connector and connect the communication cable wires to the G, A, B, and 12V +/- respectively (see figure on the right →). Please use a twisted pair connection for A and B., and make sure RS485-1 is set to the inverter and BUI. Connect the other side of this cable to the inverter.
4. The Backup Interface includes a built-in meter. If you are using full home backup, you must disconnect any other external export/import meter and remove it from SetApp. The internal meter must be configured as import/export. If you are using partial home backup, you will have to disable the BUI internal meter, connect an external meter on the main panel, and define it as the import/export meter of the system. For setup procedure please follow the commissioning procedure and videos.

3

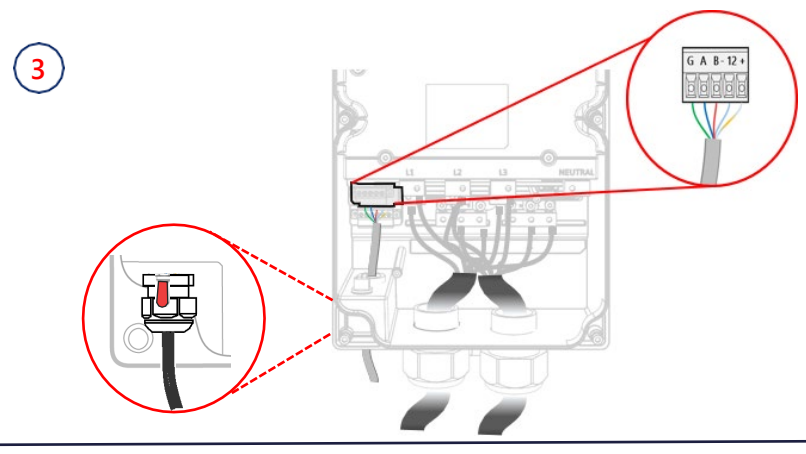

4

Closing the Backup Interface

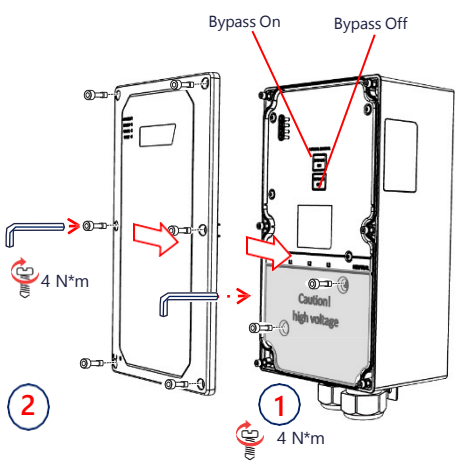

To ensure proper operation, please press each switch, ONLY ONCE, in the following order:

1. Press Bypass On.
2. Press Bypass Off.

To close the Backup Interface:

1. Using M4 Allen key, secure Backup Interface internal lower cover with two screws.
2. Using M5 Allen key, secure Backup Interface external front cover with six screws.
3. Now you can move the P/On/Off switch to the ON position.

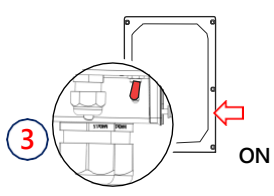

5

Configuring Installation

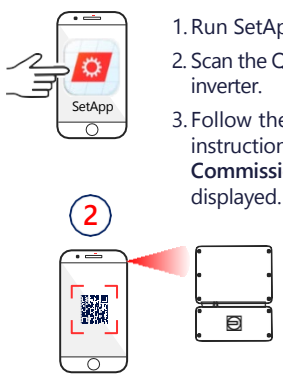

3

1. Run SetApp.
2. Scan the QR code on the inverter.
3. Follow the on-screen instructions until the **Commissioning** screen is displayed.

4 **Commissioning**

Site Commissioning

RS485-1

Meter1

Remove Meter

5 **Commissioning**

Device Manager

Check **Home Backup Interface**

Add Selected

Check all items and tap **Continue**

Add Device

6

Backup system checkup

Note: Before starting, make sure the Backup Interface is fully and successfully commissioned. Confirm that the Inverter system is operating and producing power and the battery power level is above 10%.

Checking the backup operation may cause 5-6 seconds of electricity supply failure to the loads before they are powered up again; if you have a load sensitive to such interruption, please disconnect it from the backup section. **Make sure the loads are evenly distributed between phases and do not exceed your inverter rating per phase during backup**.

1. Make sure you have power from the grid and your inverter is working.
2. Make sure the On Grid LED is ON and there is no fault detected. Turn OFF the main CB coming from the grid. Immediately after that, all home loads should shut down and the On Grid LED should turn OFF.
3. Wait for a few seconds till all the home loads are powered up again, the LED marked as Backup should turn ON.
4. After a few minutes of stable operation, turn ON the main CB again. The backup LED should turn OFF and the On Grid LED should turn on again.

LED Indications

On Grid

ON
On Grid or boot

OFF
Backup mode

Blinking
Firmware upgrade

Fast blinking
Backup interface received request to identify itself

Backup

ON
In backup or boot

OFF
On Grid

Blinking
Firmware upgrade

Fast blinking
Backup interface received request to identify itself

Comm

ON
Connected to the network/ received modbus packet/ boot

Blinking
There is no communication over RF or RS485
- On RF – not connected or temporarily disconnected
- On RS485 – no packet received for 30 seconds

Flickering
Bootloader is upgrading software

Fast blinking
Device received request to identify itself

Fault

ON
Fault or boot

OFF
No faults

Blinking
Firmware upgrade

All LEDs OFF

No power

Manually Switching to/from Grid-Connected Mode

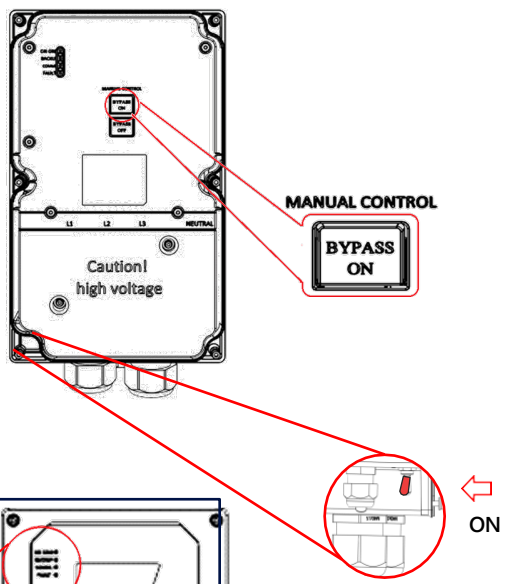

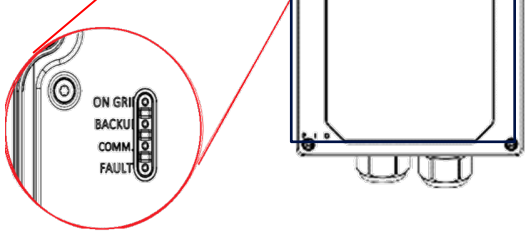

WARNING!
Only a certified installer is permitted to perform this operation

This section describes how to reconnect the grid in case the Backup Interface hasn't switched it back for some reason.

Before operating these Bypass switches, **make sure the P/ON/OFF switch is in the *ON* position**.

If the P/ON/OFF switch is in the *OFF* position, the Bypass switch may malfunction.

Switching from *Off Grid* to *On Grid*

In case the grid came back from an outage, but the system is still working in *Off Grid*, use the following procedure to switch the grid back to the system:

1. Remove the Backup Interface front cover as shown above.
2. Press Bypass On on the Manual Control panel.
3. Close the external cover.

Please note that *Bypass OFF* disconnects the grid from the home. **DO NOT** press this switch after completing the installation.

IMPORTANT! The backup system will generate power for home loads even in case the main circuit breaker is turned OFF. To prevent power during home electrical service, you must make sure to turn OFF the Inverter and the Backup Interface.
Make sure to attach the warning label in a visible location, close to the main circuit breaker of the main panel. The warning label must be visible to anyone trying to turn OFF the main circuit breaker.

