/ STPHxx-60-ISP-xx-11 | Version 1.1

SUNNY TRIPOWER HYBRID X 5 / 6 / 8 / 10 / 12 / 15

STPH5-60 / STPH6-60 / STPH8-60 / STPH10-60 / STPH12-60 / STPH15-60

eManual

1

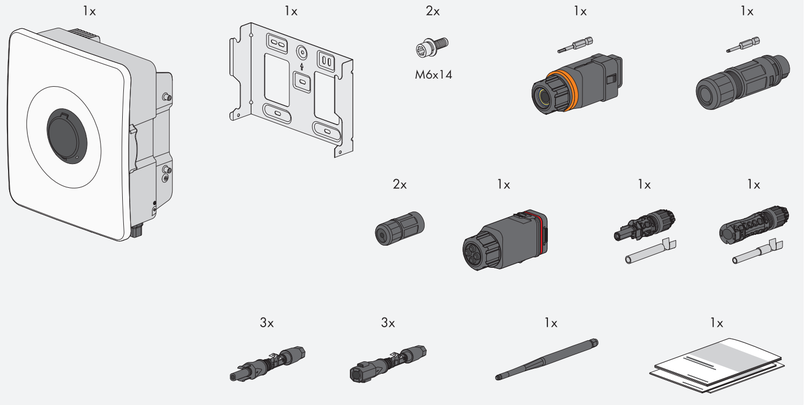

2

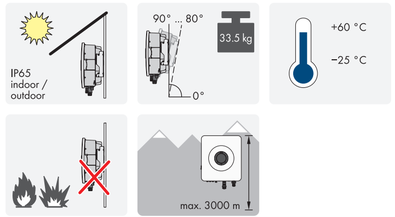

3

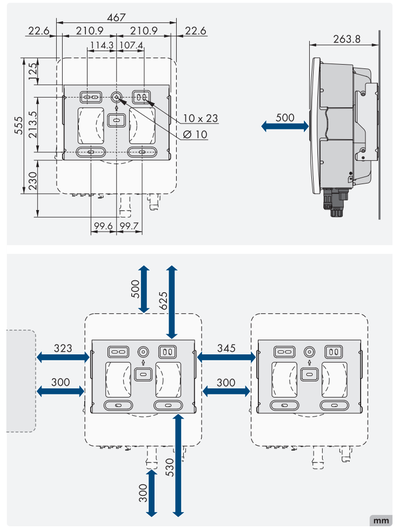

3

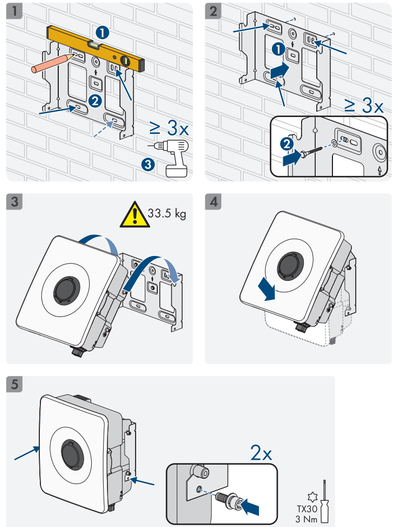

4 AC

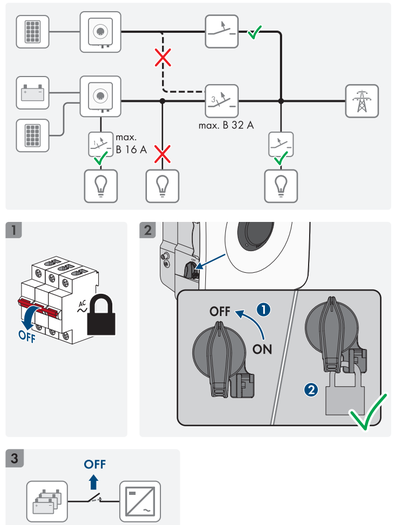

4 AC

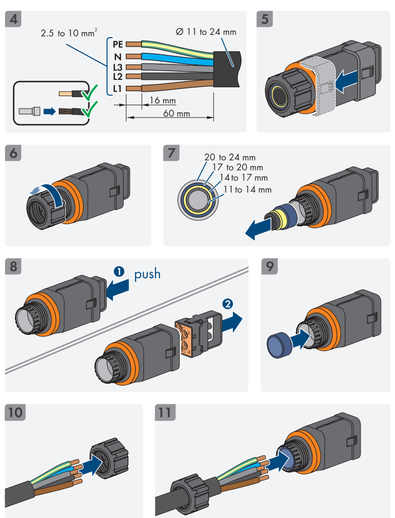

4 AC

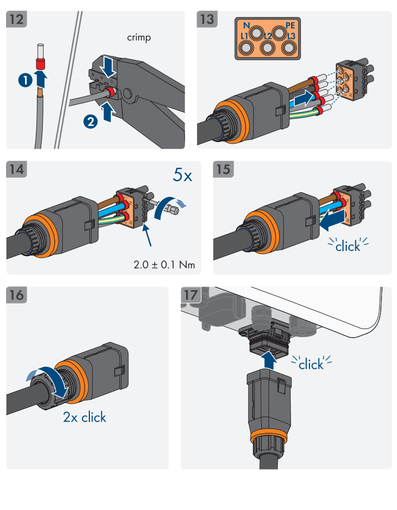

5

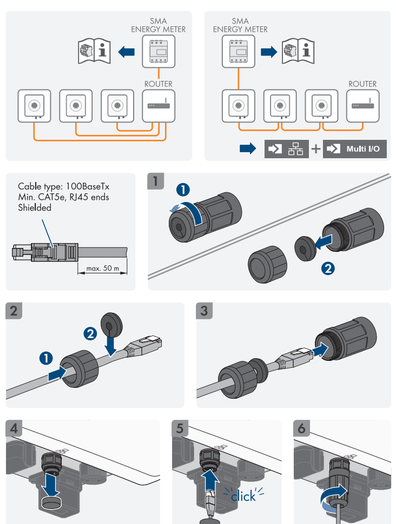

6 SMA HOME STORAGE / SMA STORAGE M

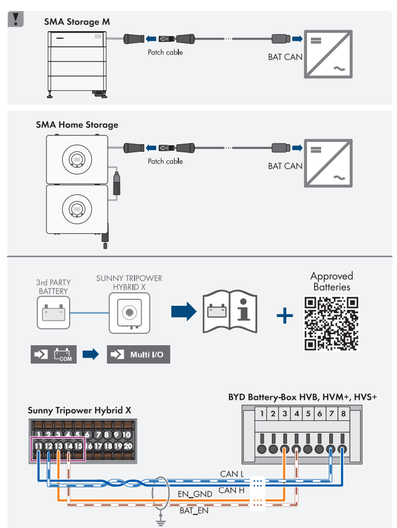

7 Multi I/O

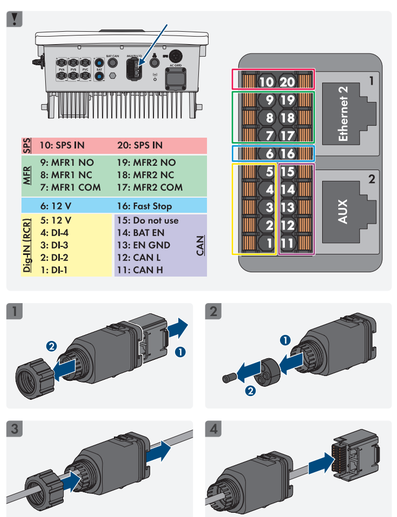

7 Multi I/O

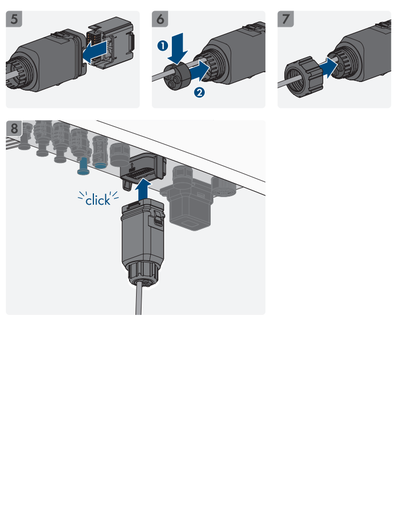

8 DC

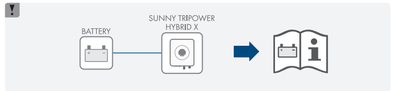

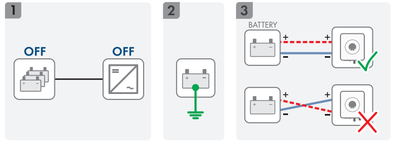

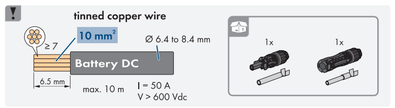

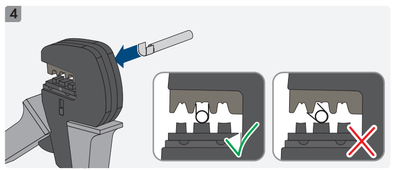

8 DC

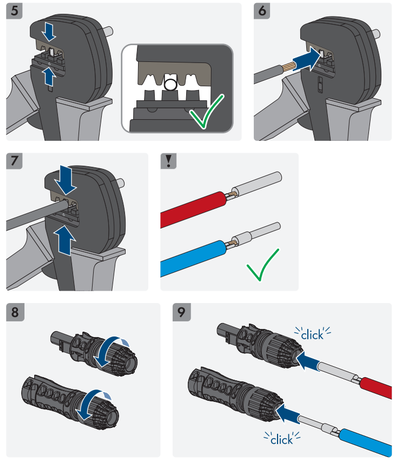

8 DC

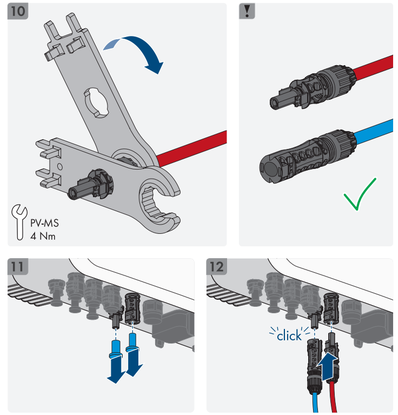

9 DC

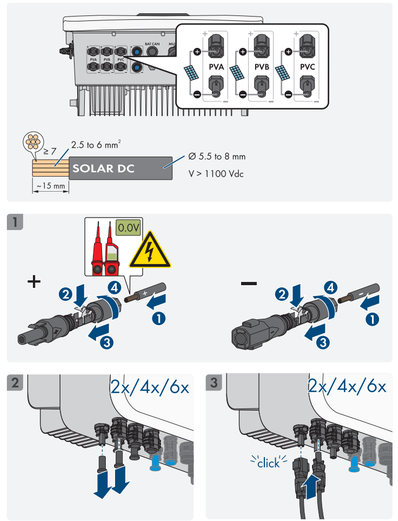

10

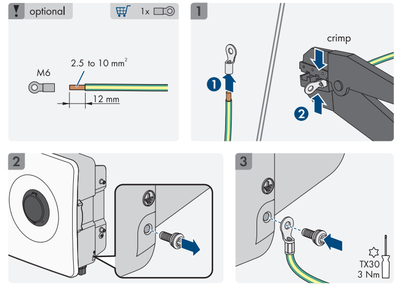

11 AC +

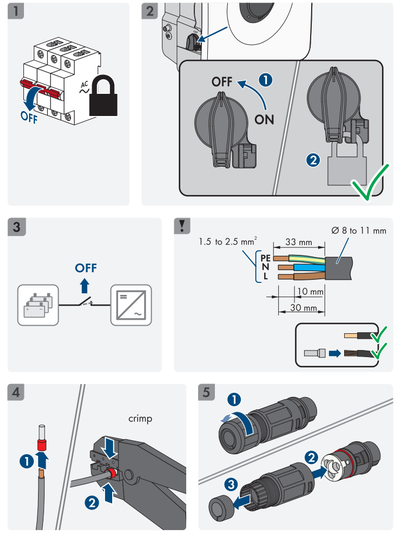

11 AC +

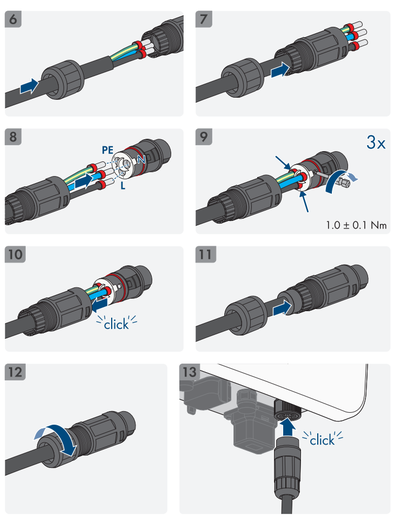

12 ON

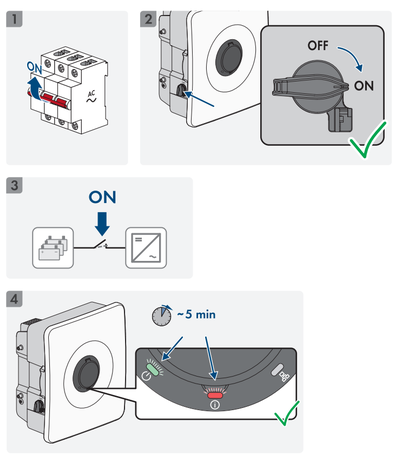

13 SMA 360° APP

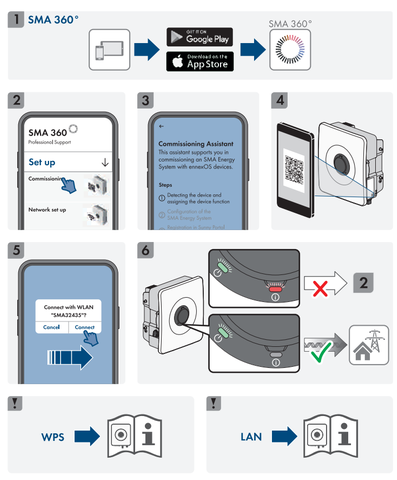

14 System data

System Data

Topology	no galvanic isolation
Overvoltage category in accordance with IEC 60664-1	II (DC), III (AC)
Protection class in accordance with IEC 61140	I
All-pole sensitive residual-current monitoring unit	integrated
Maximum permissible value for relative humidity, condensing	100 %
Extended humidity range according to IEC 60721-3-4	0 % to 100 %
Pollution degree inside the enclosure	2
Pollution degree outside the enclosure	3

AC

	STPH5-60	STPH6-60	STPH8-60
$P_{AC\ (@230\ V)}$	5 kW	6 kW	8 kW
$S_{(@cos\ \varphi\ =\ 1,\ 230\ V)}$	5 kVA	6 kVA	8 kVA
$V_{AC,\ r}$	220 V / 230 V / 240 V		
$V_{AC,\ range}$	184 V to 264 V		
$I_{AC,\ max}$	7,6 A	9,1 A	12,1 A
$I_{AC,\ max}$ (Backup)	16 A		

14 System data

	STPH5-60	STPH6-60	STPH8-60
f_{AC}	50 Hz		
cos φ	0.8 overexcited to 0.8 underexcited		

	STPH10-60	STPH12-60	STPH15-60
$P_{AC\ (@230\ V)}$	10 kW	12 kW	15 kW
$S_{(@cos\ \varphi\ =\ 1,\ 230\ V)}$	10 kVA	12 kVA	15 kVA
$V_{AC,\ r}$	220 V / 230 V / 240 V		
$V_{AC,\ range}$	184 V to 264 V		
$I_{AC,\ max}$	15,2 A	18,2 A	22,7 A
$I_{AC,\ max}$ (Backup)	16 A	22,7 A	22,7 A
f_{AC}	50 Hz		
cos φ	0.8 overexcited to 0.8 underexcited		

DC

	STPH5-60	STPH6-60	STPH8-60
Max. generator power	7500 Wp	9000 Wp	12000 Wp
$V_{DC,\ max}$	1000 V		
$V_{DC,\ MPP}$	90 V to 850 V		
$V_{DC,\ Initial\ input}$	100 V		
$I_{DC,\ max\ usable\ input\ A\ /\ B}$	18 A		
$I_{SC\ PV\ max,\ all\ inputs}$	24 A		

14 System data

	STPH10-60	STPH12-60	STPH15-60
Max. generator power	15000 Wp	18000 Wp	22500 Wp
$V_{DC,\ max}$	1000 V		
$V_{DC,\ MPP}$	90 V to 850 V		
$V_{DC,\ Initial\ input}$	100 V		
$I_{DC,\ max\ usable\ input\ A\ /\ B}$	18 A		
$I_{SC\ PV\ max,\ all\ inputs}$	24 A		

Battery

Type	Li-ion battery
$V_{DC,\ max}$	600 V
$V_{DC,\ min}$	80 V
$I_{DC,\ max}$	50 A