SUNNY HOME MANAGER 2.0

Quick Reference Guide

Rev.0001

VALIDITY

This document is valid for the Sunny Home Manager 2.0* (HM-20) from firmware version 2.00.00.R.

TARGET GROUP

Only qualified persons with the following skills are allowed to perform the tasks described in this document:
- Training in the installation and commissioning of electrical devices and installations
- Training in how to deal with the dangers and risks associated with installing and using electrical devices and installations
- Knowledge of the applicable standards and directives
- Knowledge of and compliance with this document and all safety information

SYMBOLS USED

⚠ DANGER	Indicates a hazardous situation that, if not avoided, will result in death or serious injury.
⚠ WARNING	Indicates a hazardous situation that, if not avoided, can result in death or serious injury.
⚠ CAUTION	Indicates a hazardous situation that, if not avoided, can result in minor or moderate injury.
NOTICE	Indicates a situation that, if not avoided, can result in property damage.
i	Information that is important for a specific topic or goal, but is not safety-relevant.
☐	Indicates a requirement for meeting a specific goal.
☑	Desired result.
✖	A problem that might occur.

INTENDED USE

The Sunny Home Manager 2.0 is the central device responsible for energy management in households with a PV system for self-consumption.
The Sunny Home Manager 2.0 carries out the following basic tasks:
- Collection of energy- and power measured values in the interconnected household
- Energy monitoring: Presentation of energy flows via Sunny Portal
- Energy management: Automatic control of interconnected household loads with the aim of energy efficiency optimization
- Dynamic limiting of the active power feed-in
- Active power measurement via integrated measuring unit with direct connection up to 63 A limiting current
- Use of current transformers necessary for applications above 63 A
- Interconnection of loads via EEBus and SEMP
- Support of the WLAN smart plugs Edimax SP-2101W

The Sunny Home Manager 2.0 does not support S0- or D0 energy meters, Plugwise products or Miele@home devices. The Sunny Home Manager 2.0 is not equipped with a Bluetooth interface. The Sunny Home Manager 2.0 is not an energy meter for power consumption in the sense of the EU directive 2004/22/EG (MID). The Sunny Home Manager 2.0 may not be used for billing purposes. The data collected by the Sunny Home Manager 2.0 relating to the power generated by your PV system may deviate from the data of the main energy meter, which is used for billing purposes.
The Sunny Home Manager 2.0 may only be connected to the subdistribution of the household on the load side behind the energy meter of the electric utility company. The Sunny Home Manager 2.0 must be installed in a switch cabinet.
It is possible to use the Sunny Home Manager 2.0 in delta IT grids. When using the Sunny Home Manager 2.0 in delta IT grids, the cumulative power values are correctly measured. Due to the measuring principle of the Sunny Home Manager 2.0, other measured values may be incorrect.
The Sunny Home Manager 2.0 is approved for use in all EU member states and Australia. Only use the Sunny Home Manager 2.0 in accordance with the information provided in the enclosed documentation. Any other application may cause personal injury or property damage.
Alterations to the product, e.g. modifications or conversions, are only permitted with the express written permission of SMA Solar Technology AG. Any use of the product other than that described in the Intended Use section does not qualify as appropriate.

* Also referred to in this document as the product.

The enclosed documentation is an integral part of the product and must be read and observed. Keep in a convenient place for future reference.
The type label must remain permanently attached to the product.
The latest version of this document and the comprehensive manual for installation, commissioning, configuration and decommissioning are to be found in PDF format at www.SMA-Solar.com.

ADDITIONAL INFORMATION

Links to additional information can be found at www.SMA-Solar.com:

Document title	Document type
SUNNY HOME MANAGER 2.0	Operating manual
SMA SMART HOME - The System Solution for more Independence	Planning guidelines
SMA SMART HOME - Home appliance energy management using EEBus	Technical information
SMA SMART HOME - Battery Charging Management with Time-of-Use Energy Tariffs	Technical information
SMA SMART HOME - Load Control via CAN Time Period. Example: Pool Pump	Technical information
SMA SMART HOME - Load Control via MUST Time Period. Example: Washing Machine	Technical information
SMA SMART HOME Load Control Using Relays or Contactors. Example: Heating Rod	Technical information

SAFETY INFORMATION

This section contains safety information that must be observed at all times when working on or with the product.
To prevent personal injury and property damage and to ensure long-term operation of the product, read this section carefully and observe all safety information at all times.

⚠ DANGER

Danger to life due to electric shock

Lethal voltages are present in the live components.
- Disconnect the connection point from voltage sources and make sure it cannot be reconnected.
- Before performing any work on the Sunny Home Manager 2.0, disconnect the grid side from all voltage sources using an installed disconnect switch.
- Ensure that the conductors to be connected are de-energized.
- Only use the Sunny Home Manager 2.0 in a dry environment and keep it away from moisture.
- Install the Sunny Home Manager 2.0 in the switch cabinet only and ensure that the connection areas for the line conductors and the neutral conductor are behind a cover or have contact protection.
- Disconnect the Sunny Home Manager 2.0 from voltage sources before cleaning. The Energy Meter must be cleaned with a dry cloth only.
- Observe the prescribed minimum clearance between the network cable and live installation components, or use suitable insulation.

⚠ DANGER

Danger to life due to electric shock if external disconnect switch is missing

Lethal voltages are present in the live components of the Sunny Home Manager 2.0.
- Install an external disconnect switch between the Sunny Home Manager 2.0 and the grid-connection point. The external disconnect switch must be close to the Sunny Home Manager 2.0 and easily accessible.

⚠ WARNING

Danger to life due to electric shock

Overvoltages (e. g. in the case of a flash of lightning) can be further conducted into the building and to other connected devices in the same network via the network cable if there is no overvoltage protection.
- Ensure that all devices in the same network are integrated in the existing overvoltage protection.
- When laying the network cable outdoors, attention must be given to suitable overvoltage protection at the network cable transition outdoors to the network inside the building.

⚠ WARNING

Risk of fire due to dirty or oxidized contact surfaces of live aluminum conductors

Connecting dirty or oxidized contact surfaces with aluminum conductors reduces the ampacity of the live terminals, thereby increasing the transition resistances. This can cause components to overheat and catch fire.
- The contact surfaces are to be cleaned, brushed, and treated with acidic and alkaline substances (e.g. petroleum jelly or special thermal grease).

⚠ WARNING

Fire risk

If a fuse is missing or incorrect and a fault occurs, a fire may be caused. This can result in death or serious injury.
- Fuse the Sunny Home Manager 2.0 line conductor with a fuse or a selective circuit breaker with max. 63 A.

PRODUCT DESCRIPTION

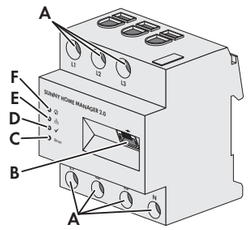

A: Connection area for line conductors and neutral conductor
B: Network terminal (Ethernet)
C: Reset button
D: Performance LED
E: COM LED
F: Status LED

SCOPE OF DELIVERY

- 1 x Sunny Home Manager 2.0 (HM-20)
- 1 x quick reference guide

Contact your specialist dealer if you find any damage.

TECHNICAL DATA

Communication	Ethernet
Nominal voltage	230 V AC / 400 V AC
Frequency	50 Hz (± 5%)
Self-consumption	< 3 W
Limiting current / line conductor	63 A
Connection cross-section with current transformers	See recommendations of the current transformer manufacturer
Connection cross-section without current transformers	10 mm² to 16 mm²
Max. cable length with current transformers	3 m
Torque for screw terminals	2 Nm
Weight	0.30 kg
Dimensions (W x H x D)	70 mm x 88 mm x 65 mm
Ambient temperature in operation	-25°C to +40°C
Ambient temperature during transport/storage	-25°C to +70°C
Relative humidity*	5% to 90%
Maximum operating altitude above mean sea level	2000 m
Protection class	II
Degree of protection**	IP2X

* non-condensing
** in accordance with IEC 60529

LED SIGNALS

Status LED (i):
- **Glowing green:** Sunny Home Manager 2.0 is switched on.
- **Flashing green:** Firmware is being updated.
- **Glowing red:** Sunny Home Manager 2.0 is starting up.
- **Flashing red:** An error has occurred.

COM LED ( ):
- **Off:** No Ethernet connection established.
- **Glowing green:** Ethernet connection established.
- **Flashing green:** The Sunny Home Manager 2.0 is sending or receiving data.

Performance LED (✓):
- **Off:** No system registered in Sunny Portal.
- **Flashing green:** Energy management in the Sunny Home Manager 2.0 running smoothly.
- **Flashing green:** An error has occurred. The error has already been reported to Sunny Portal.
- **Glowing red:** An error has occurred. The error has not yet been reported to Sunny Portal.
- **Flashing red:** No connection to Sunny Portal established.

Refer to the "Troubleshooting" section for error diagnosis.

MOUNTING

- Mount the Sunny Home Manager 2.0 on the top-hat rail. To do so, hook the Sunny Home Manager 2.0 onto the top edge of the top-hat rail and press down until it snaps into place.

INFORMATION ON CONNECTION AND COMMISSIONING

☐ The Sunny Home Manager 2.0 is supplied with current via the line conductor L1. At least the line conductor L1 and the neutral conductor must be connected in order that the Sunny Home Manager 2.0 switches on.
☐ When using fine stranded wire, bootlace ferrules must be used.
☐ The screw terminals must be retightened after six to eight weeks.

ELECTRICAL CONNECTION FOR APPLICATIONS UP TO 63 A

Installation using the integrated measuring unit

The following figure shows a connection example in TN and TT grid configurations in the case of installation at the grid-connection point when using the integrated measuring unit (recommended). For exact connection specifications, contact your electric utility company.

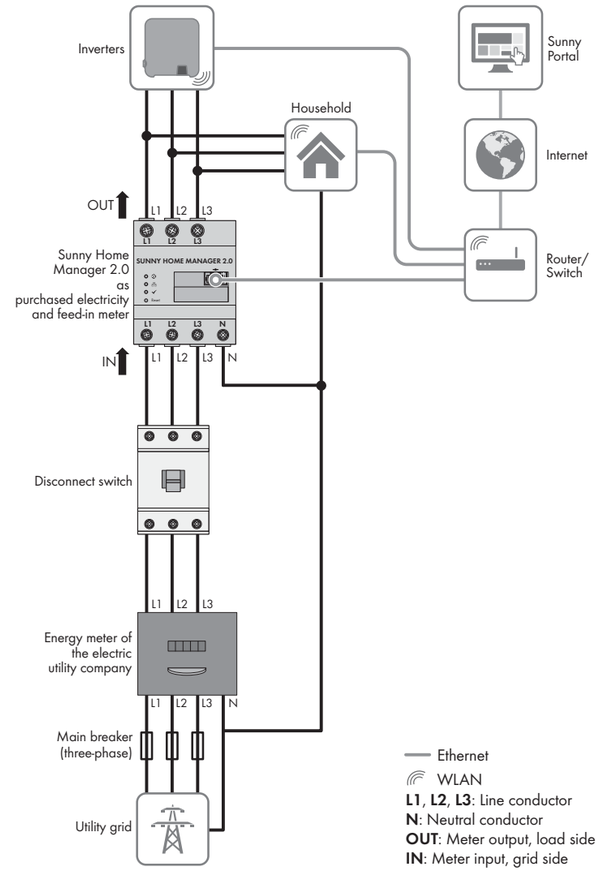

Procedure:

1. Connect the conductors to the Sunny Home Manager 2.0. Observe the permitted connection cross-section and torque for screw terminals (see Section "Technical Data"):
   - In a three-phase utility grid, connect the line conductors L1, L2 and L3 and the neutral conductor to the Sunny Home Manager 2.0 in accordance with the wiring diagram.
   - In a single-phase utility grid, connect the line conductor L1 and the neutral conductor to the Sunny Home Manager 2.0 in accordance with the wiring diagram.

Installation when not using the integrated measuring unit

If an SMA Energy Meter is installed at the grid-connection point and is not to be replaced by the Sunny Home Manager 2.0, the Sunny Home Manager 2.0 can also be operated without the measuring unit being enabled.

1. Connect the line conductor L1 and the neutral conductor to the voltage supply of the Sunny Home Manager 2.0.
2. Select the SMA Energy Meter present as the purchased-electricity and feed-in meter in Sunny Portal (see Section "Defining the Energy Meter at the Grid-Connection Point").

Measuring the PV production power (single-phase / three-phase) up to 63 A

In PV systems with inverters from other manufacturers or hybrid systems with SMA inverters, the integrated measuring unit can also be used for measuring the PV production power. In this case there must already be an SMA Energy Meter installed at the grid-connection point (see "Installation when not using the integrated measuring unit").

1. Connect the Sunny Home Manager 2.0 to the common connection point of all inverters in the household grid.
2. Select the Sunny Home Manager 2.0 as the PV production meter in Sunny Portal (see Section "Defining the Energy Meter at the Grid-Connection Point").

ELECTRICAL CONNECTION FOR APPLICATIONS > 63 A

The following figure shows a connection example in TN and TT grid configurations in the case of installation at the grid-connection point. For exact connection specifications, contact your electric utility company.

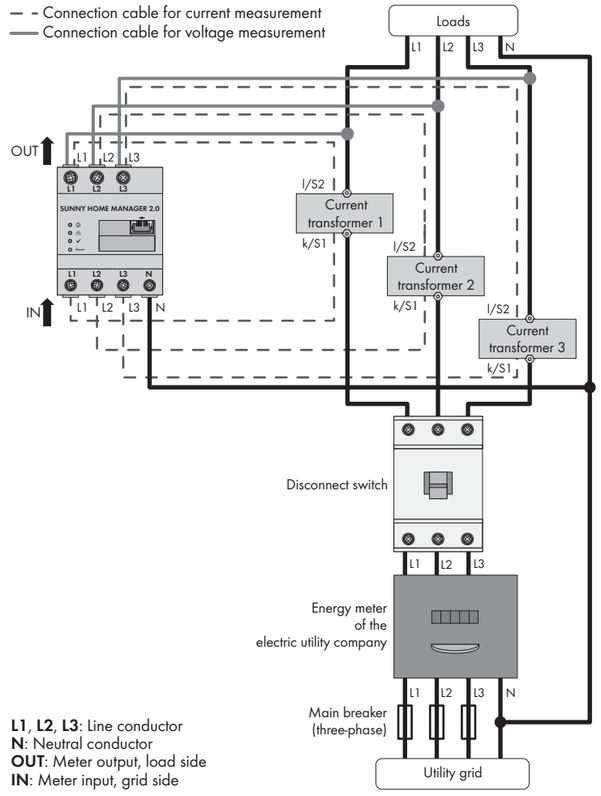

L1, **L2**, **L3**: Line conductor
N: Neutral conductor
OUT: Meter output, load side
IN: Meter input, grid side

Additionally required material (not included in the scope of delivery):

☐ 3 x current transformer
☐ Connection cables for current transformers

Recommendations for the current transformer

SMA Solar Technology AG recommends current transformers designed for a secondary current of 5 A. The current transformers should have at least accuracy class 1.

Procedure:

1. Connect one current transformer to each line conductor L1, L2 and L3.
2. On each current transformer, connect one connection cable for current measurement to each of the secondary current terminals (**k/S1** and **I/S2**). Observe the permitted connection cross-section of the Sunny Home Manager 2.0 (see Section "Technical Data"):
3. Connect the connection cables for current measurement (dashed gray line) to the Sunny Home Manager 2.0. Observe the prescribed torque for screw terminals (see Section "Technical Data").
4. Connect the connection cables for voltage measurement (solid gray line) to the Sunny Home Manager 2.0. Observe the prescribed torque for screw terminals (see Section "Technical Data").

Connect the connection cables for voltage measurement to the corresponding line conductors.

NETWORK CONNECTION

Connecting Sunny Home Manager 2.0 via router / network switch

The Sunny Home Manager must be connected to the local network via a router / network switch. If the Sunny Home Manager 2.0 is connected directly to an SMA inverter via network cable, the data will not be transmitted to the router.

IGMP protocol from version 2 must be supported

Data transmission with the Sunny Home Manager 2.0 works with multicasts. In order for the Sunny Home Manager 2.0 to function correctly, all used network components (router, network switch, power-line communication and WLAN converter) must support at least IGMP protocol version 2 (IGMP V2) (see manufacturer documentation).

Additionally required material (not included in the scope of delivery):

☐ 1 x network cable

Recommended cable types:

- SF/UTP, S-FTP, S/UTP, SF/FTP, S/FTP, S-STP

Procedure:

1. Connect the network cable to the network terminal of the Sunny Home Manager 2.0.
2. Connect the other end of the network cable to a router / network switch.

COMMISSIONING

Requirements:

☐ The PV system must be in operation.
☐ All devices must be in operation and connected to the Sunny Home Manager 2.0 via a router / network switch.
☐ Devices that support the EEBus industry standard must be connected to the Sunny Home Manager 2.0 (see technical information "SMA SMART HOME - Home appliance energy management using EEBus").
☐ DHCP must be active for the router (see router manual).

Procedure:

1. Cover the Sunny Home Manager 2.0 with a cover or the contact protection of the subdistribution.
2. Switch the power supply to the subdistribution back on.
   ☑ The LEDs on the Sunny Home Manager 2.0 light up during the startup procedure. All devices in the local network will be recognized automatically.
3. Register all devices in Sunny Portal.

REGISTERING IN SUNNY PORTAL

Sunny Portal serves as the user interface of the Sunny Home Manager 2.0. Therefore, you must register the Sunny Home Manager 2.0 in Sunny Portal.

Requirements:

☐ The PV system and all devices in the local network must be in operation (see Section "Commissioning").
☐ The registration ID (RID) and the identification key (PIC) from the Sunny Home Manager 2.0 type label must be available.

Procedure:

1. Call up **www.SunnyPortal.com** and select [**PV System Setup Assistant**].
   or
   Call up **www.SunnyPortal.com/Register**.
   ☑ The PV System Setup Assistant opens.
2. Select [**Next**].
   ☑ The **User Registration** page opens.
3. Follow the instructions of the PV System Setup Assistant.
4. After completing the registration, configure further settings in Sunny Portal (see the Sunny Home Manager 2.0 manual at www.SMA-Solar.com):
   - Add automatically recognized devices
   - Configure the load profile of the automatically recognized devices
   - Enter the operator data
   - Enter the PV array power
   - Enter the feed-in tariff, self-consumption tariff and electricity tariff
   - Configure settings for PV system monitoring.

DEFINING THE ENERGY METER AT THE GRID-CONNECTION POINT

Requirements:

☐ You must be logged in to Sunny Portal as an **Installer**.

Procedure:

1. Select **Configuration > Device Overview** in the page and menu selection.
2. In the Sunny Home Manager 2.0 row and the **Properties** column, select the properties symbol.
3. Select [**Edit**].
4. In the **Meter Configuration** area, select the desired feed-in and purchased electricity meter or PV production meter from the drop-down list (see Section "Electrical Connection for Applications up to 63 A" for selection).
5. Select [**Save**].

RESETTING THE SUNNY HOME MANAGER 2.0

Loss of data due to replacement or due to resetting to default settings

If the Sunny Home Manager 2.0 is reset to the default settings or replaced, all data saved in the Sunny Home Manager 2.0 will be deleted. The data saved in Sunny Portal can be transmitted to the Sunny Home Manager 2.0 after calling up the PV system again in Sunny Portal. Devices that were connected to the Sunny Home Manager 2.0 via EEBus must be reconnected (see technical information "SMA SMART HOME - Home appliance energy management using EEBus").

Default settings

- To reset the Sunny Home Manager 2.0 to the default settings, press down and hold the reset button using a sharp object for two to six seconds.
  ☑ LEDs flash first green and then red.

Restart

- To restart the Sunny Home Manager 2.0, press down and hold the reset button using a sharp object for longer than six seconds.
  ☑ LEDs go out. The status LED then glows red constantly during system startup.

Pressing down and holding the reset button for less than two seconds has no effect.

TROUBLESHOOTING

The Sunny Home Manager 2.0 status LED flashes red.

It may be that DHCP has not been activated in the router.

- Activate DHCP in the router.

The Sunny Home Manager 2.0 performance LED flashes green.

An error has occurred. The error has already been reported to Sunny Portal.

- Check the system logbook in the Sunny Portal system and follow the recommended actions.

The Sunny Home Manager 2.0 performance LED glows red.

An error has occurred. The error has not yet been reported to Sunny Portal.

- Ensure that the Sunny Home Manager 2.0 is connected to the Internet via the local router. If the connection is correct, the error information will be transmitted to Sunny Portal.
- Check the system logbook in the Sunny Portal system and follow the recommended actions.

The Sunny Home Manager 2.0 performance LED flashes red.

There is no connection to Sunny Portal.

- Ensure that the Sunny Home Manager 2.0 is connected to the Internet via the local router. If the connection is correct, energy data and error information will be transmitted to Sunny Portal.

During registration, the PV System Setup Assistant can not find a Sunny Home Manager 2.0, event though the RID and PIC have been correctly entered.

It is possible that the Sunny Home Manager 2.0 is not connected to the router correctly.

- Ensure that the Sunny Home Manager 2.0 is connected to the router correctly.

It is possible that there is no voltage supply to the Sunny Home Manager 2.0. In this case, all LEDs on the Sunny Home Manager 2.0 will be off.

- Ensure that the Sunny Home Manager 2.0 has a voltage supply (see section on electrical connection).

It is possible that the registration procedure was previously initiated but not completed.

- Reset the Sunny Home Manager 2.0 (see Section "Resetting the Sunny Home Manager 2.0").

DECOMMISSIONING

DANGER

Danger to life due to electric shock

Lethal voltages are present in the switch cabinet.

- Disconnect the connection point from voltage sources and make sure it cannot be reconnected.
- Ensure that the conductors to be disconnected from the Sunny Home Manager 2.0 are de-energized.

Procedure:

1. Remove all connected conductors from the Sunny Home Manager 2.0.
2. Remove the Sunny Home Manager 2.0 from the top-hat rail. To do so, tilt the the lower edge of the Sunny Home Manager 2.0 forwards and lift the Sunny Home Manager 2.0 off of the top-hat rail.

DISPOSAL

- Dispose of the Sunny Home Manager 2.0 in accordance with the locally applicable disposal regulations for electronic waste.

OPEN SOURCE LICENSES

The software licenses for the installed software modules are contained in the Sunny Home Manager 2.0 software. Upon connecting the Sunny Home Manager 2.0 with a web browser, you will find the licenses at the following address: http://IP_address/legal_notices.txt.
The IP address (e.g. 192.168.1.120) will be assigned by your router for the Sunny Home Manager 2.0.
You will find further information on determining the IP address in your router documentation.

CONTACT

If you experience any technical problems with our products, please contact Service. The following data is required in order to provide you with the necessary assistance:

- Serial number of the Sunny Home Manager 2.0
- Type and serial number of the SMA products
- Error description
- Firmware version

SMA Solar UK Ltd.
Milton Keynes
+44 1908 304899
SMA Online Service Center:
www.SMA-Service.com

SMA Australia Pty Ltd.
Sydney
Toll free for Australia: 1800 SMA AUS
(1800 762 287)
International: +61 2 9491 4200

International SMA Service Line
Niestetal
00800 SMA SERVICE
(+800 762 7378423)

Version: 2017-01-27

Copyright © 2017 SMA Solar Technology AG. All rights reserved.