Base Installation Quick Guide

Version: 01

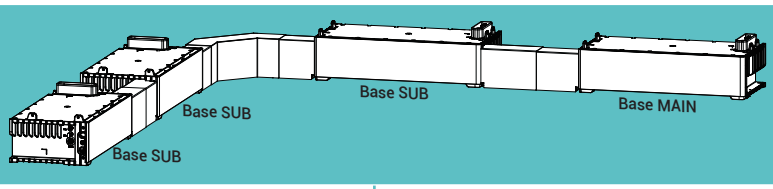

1

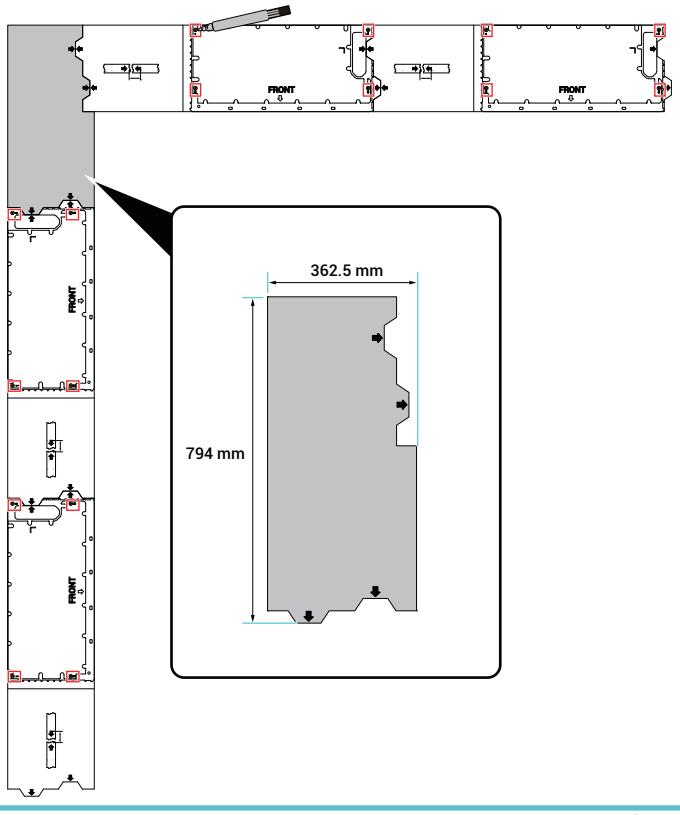

2

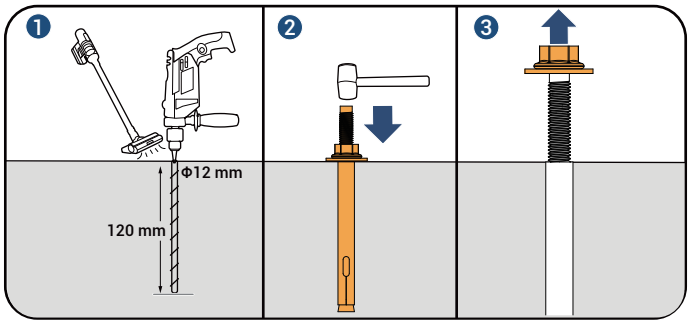

3

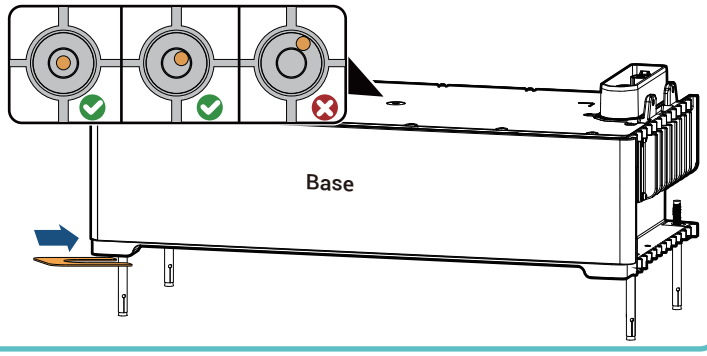

4

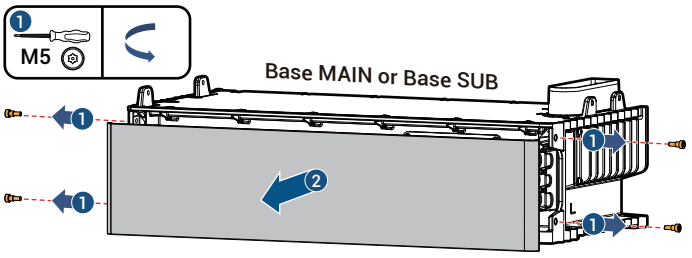

5

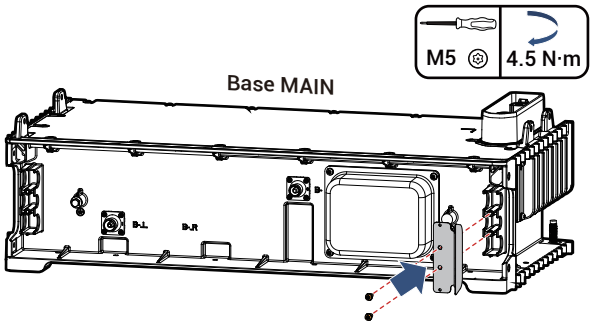

6

Connection between Base SUB and Base SUB		Connection between Base SUB and Base MAIN		Wiring diagram
Base SUB	Base SUB		Base MAIN	
B+	B-	B+	B-	Base MAIN-0.5C/Base SUB-0.5C; Base MAIN-1C/Base SUB-1C
B-_R	B-_L	B-_R	B-_L	
⏚	⏚	⏚	⏚	M8, 8–10 N·m
B+_R	B+_L	B+_R	B+_L	B+_R, B+_L
BAL_R	BAL_L	BAL_R	BAL_L	BAL_R, BAL_L
COM_R	COM_L	COM_R	COM_L	COM_R, COM_L

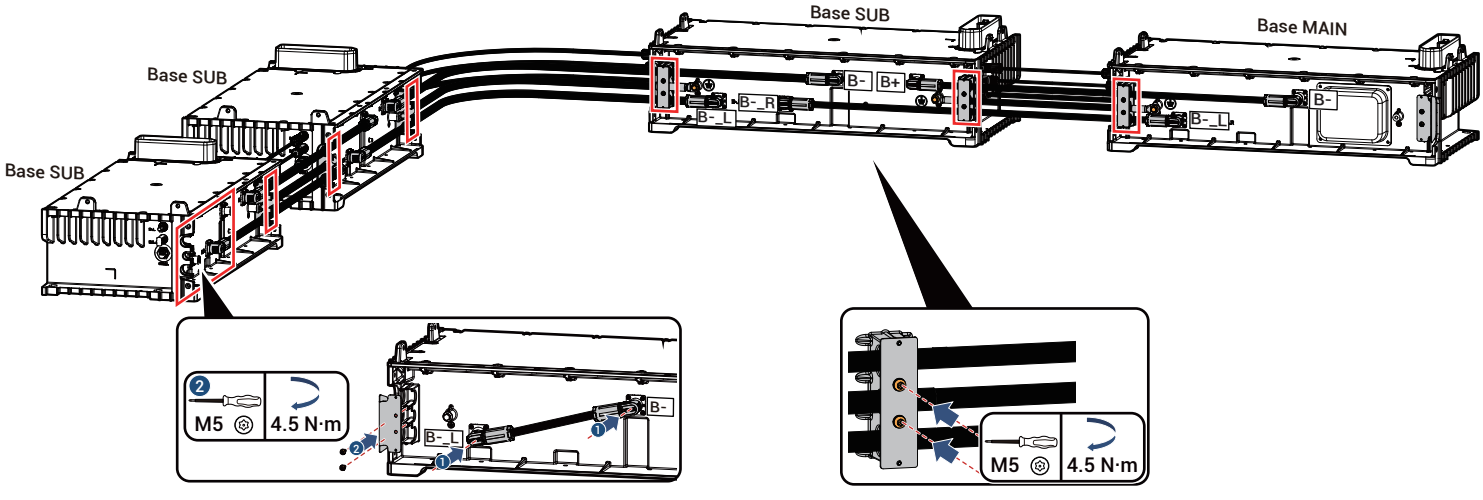

7

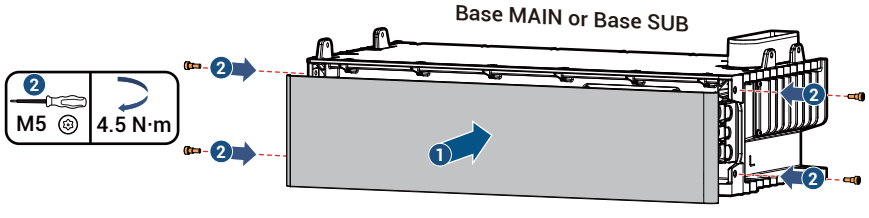

8

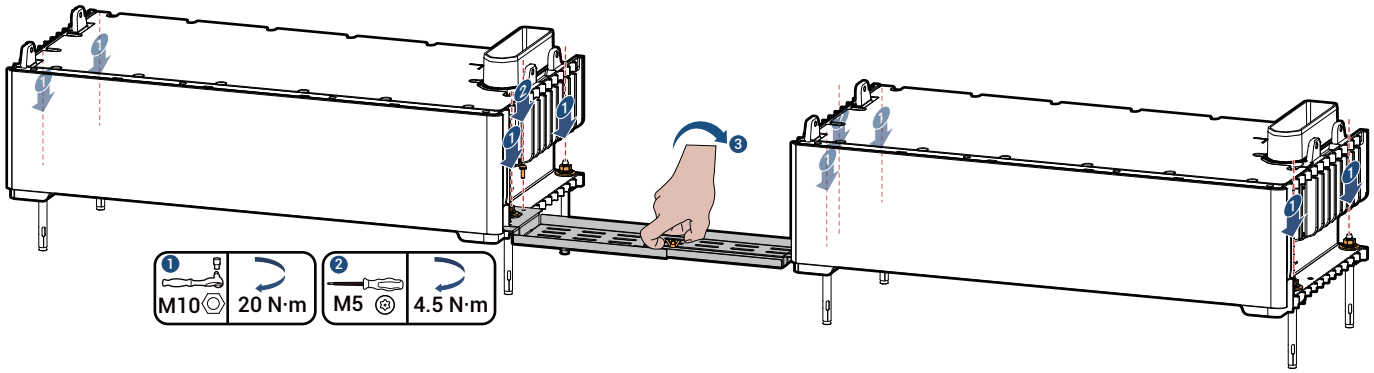

9

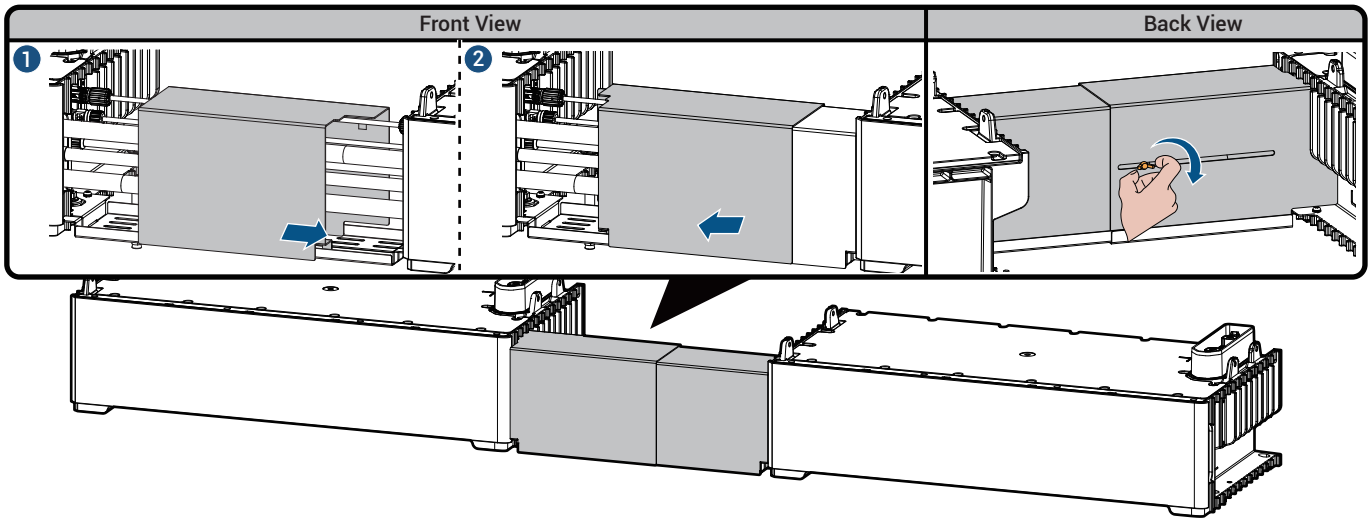

10

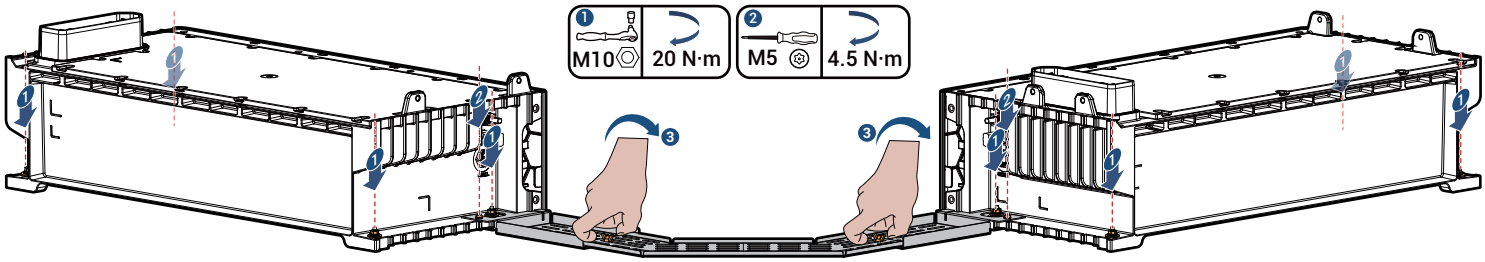

11

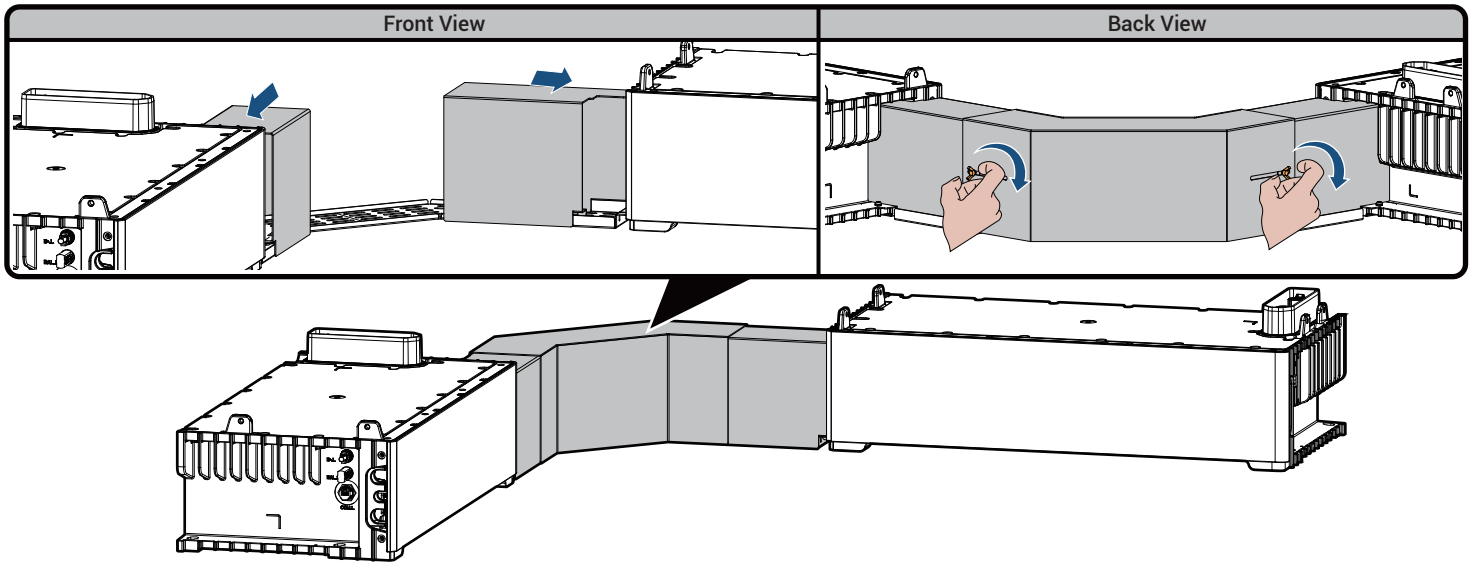

Due to product upgrades or other reasons, this document will be updated irregularly. Please visit our official website (www.sigenergy.com) to obtain the latest version. The printed materials inside the box will not be collected and reprinted. Unless specially agreed upon, this document serves as a user guide only, and its contents cannot replace product labels or manuals. The device warranty does not cover damage caused by not following the instructions in this document and manual.

Copyright© 2026 Sigenergy Technology Co., Ltd. All Rights Reserved.