C&I Sigen Inverter & Sigen Battery

Energy Storage System

User Manual

Version: Draft A

Release date: 2025-06-18



Copyright Notice

Copyright© 2025 Sigenergy Technology Co., Ltd. All Rights Reserved.

Description in this document may contain predictive statements regarding financial and operating results, product portfolio, new technology, configurations and features of product. Several factors could cause difference between actual results and those expressed or implied in the predictive statements. Therefore, description in this document is provided for reference purpose only and constitutes neither an offer nor an acceptance. Sigenergy Technology Co., Ltd. may change the information at any time without notice.

SIGENERGY and other Sigenergy trademarks are owned by Sigenergy Technology Co., Ltd.

All trademarks and registered trademarks in this document belong to their owners.

Website | LinkedIn | YouTube

www.sigenergy.com

Contents

Revision History **5**
Preface **6**
Chapter 1 Safety Precautions **7**
1.1 General Requirements 7
1.2 Personnel Requirements 9
Chapter 2 Handling and Transportation Requirements **10**
2.1 Routine Requirements 10
2.2 Battery Pack 11
Chapter 3 Storage Requirements **13**
Chapter 4 Operation Requirements **15**
4.1 Equipment Installation 18
4.2 Cable Connections 21
4.3 Safety Tips for Working at Heights 23
4.4 Equipment Maintenance and Replacement 25
Chapter 5 Introduction to energy storage system **26**
5.1 Product Introduction 26
5.1.1 Sigen Inverter 26
5.1.2 Sigen Battery 28
5.1.3 Sigen Power Sensor 29
5.1.4 Sigen Communication Module 30
5.1.5 Sigen Communication Bridge 30
5.1.6 Sigen Data Logger 31
5.2 Appearance Introduction 32
5.2.1 Sigen PV (50–125)M1 Inverter 32
5.2.2 Sigen PV (50–110)M1-HYA Inverter 34
5.2.3 Sigen PV (50–110)M1-HYB Inverter 36
5.2.4 SigenStack 38
5.2.5 Sigen Communication Bridge 39
5.2.6 Sigen Data Logger 40
5.3 Label Description 42

5.4 Supported Power Supply Methods for the Power Grid 43
5.5 System wiring introduction 44
Chapter 6 Location Requirements 49
Chapter 7 System Operation 53
7.1 LED Indicator State 53
Chapter 8 Equipment Installation and Wiring 55
Chapter 9 mySigen App Query 56
Chapter 10 System Maintenance 57
10.1 Routine Maintenance 57
10.2 System Power-on/Power-off 59
10.2.1 System power-off 59
10.2.2 System power-on 60
10.3 Low SOC 61
10.4 The standard charging steps for a battery pack 62
10.5 Emergency Treatment 63
Chapter 11 Inverter and Battery Pack Disposal 65
11.1 Removing the Inverters 65
11.2 Scrapping the Inverters 65
Chapter 12 Appendix 66
12.1 Technical Parameter 66

Revision History

Version	Date	Description
Draft A	2025.06.18	Pilot system version.

Preface

Overview

This document mainly describes the product information, system wiring, and system operation and maintenance of C&I PV storage system.

Intended Audience

This document is intended for:

- Professionally trained and qualified installers.
- Technical support engineers.

Definitions of Signs

The following signs may be used in the document to indicate safety precautions or key information. Before installation and operation of the equipment, familiarize yourself with signs and their definitions.

Sign	Definition
Danger	Danger. Indicates an imminently hazardous situation which, if not avoided, will result in death or serious personal injury.
Warning	Warning. Indicates a potentially hazardous situation which, if not avoided, will result in serious personal injury or property damage.
Caution	Caution. Indicates a potentially hazardous situation which, if not avoided, will result in property damage.
Tips	Indicates important or key information and provides operation tips.

Chapter 1 Safety Precautions

1.1 General Requirements

Before installing, operating, and maintaining the equipment, familiarize yourself with this user manual. Strictly follow the instructions in the manual and adhere to all safety precautions indicated on the equipment and within the manual.

The "Danger," "Warning," and "Caution" statements described in this manual are only supplementary precautions to all safety notices.

The Company shall not be held liable for equipment damage or property loss resulting from violation of safety operation requirements or safety standards of design, production, and use of equipment, including but not limited to the following:

- The installation environment does not comply with relevant international, national, or regional standards.
- Failure to comply with local laws and regulations during the transportation, installation, operation, and maintenance of the equipment.
- The installation area does not meet the requirements of the equipment.
- Cables, tools, and other materials used do not comply with relevant international, national, or regional standards.
- Operation connected to the grid without obtaining permission from the power authorities of the country or region where it is located.
- Damage caused by storage conditions that do not meet the requirements of the equipment.
- Failure to operate according to the instructions and precautions in the manual.
- Failure to follow the prescribed sequence of steps for installation, operation, and maintenance in the manual, unauthorized changes to the installation sequence, unauthorized modification, additions, or changes to equipment, etc.
- Do not install other equipment on top of the equipment without our evaluation.

- Failure to handle the equipment with care or violent installation may result in equipment damage and liquid leakage and pose a risk of fire or explosion hazards.
- Failure to follow the operational requirements indicated on warning labels on the equipment or tools.
- Negligence, improper operation, or deliberate damage.
- Damage caused during transportation by you or a third party you commission.
- Damage caused by the change of the scenarios for which the equipment is intended on the customer or a third party company side.
- Equipment damage caused by failure to use the accessories supplied with the packing box or purchase and use accessories of the same specification on the customer or a third-party company side.
- Equipment damage caused by unauthorized disassembly or replacement of the equipment or modification of software code, or other improper operations.
- Equipment damage caused by force majeure (such as war, earthquake, fire, storms, lightning, floods, and debris flow).
- Damage caused by the failure of the natural environment or external power parameters to meet the standard requirements for the normal operation of the equipment. For example, the actual operating temperature of the equipment is too high or too low.
- The equipment is stolen.
- The equipment is damaged after the warranty period expires.
- It is strictly forbidden for fingers, parts, screws, tools, or boards to touch the running fan to avoid injury to hands or damage to the equipment.

1.2 Personnel Requirements

- Professionals or well-trained personnel must be assigned to install, operate, and maintain the equipment. During operations, irrelevant personnel are prohibited from approaching the work area.
  - Professionals: Personnel who are familiar with the composition and working principle of the system or equipment, have participated in training or operated the equipment, and are familiar with the factors that may lead to risks during the installation, operation, and maintenance of the equipment and risk levels.
  - Well-trained personnel: Personnel who have participated in relevant technical and safety training, have relevant experience, can identify operational risks, and can take relevant corrective measures to reduce the impact of risks.
- For special operations, such as climbing and electrical operations on high-voltage equipment, the operator must be certified for special operations as required by the local country/region.
- Only authorized professionals can replace the equipment or components (including software), remove safety devices, or repair the equipment.

Chapter 2 Handling and Transportation Requirements

2.1 Routine Requirements

- Wear personal protective equipment such as protective gloves and safety shoes while handling the equipment.
- Select an appropriate handling method according to the equipment weight.
- When handling the equipment, always follow the package orientation marking. Do not turn the equipment upside down or tip it over.
- The tilt angle of the equipment with packaging must be less than or equal to 15°. After the equipment is unpacked, its tilt angle must be less than or equal to 10°. Take into account the heights of persons assigned to handle the equipment to ensure that the equipment is handled stably.
- Lift or move the equipment slowly to avoid personal injury.
- When using a forklift, position the forks so that the center of gravity of the equipment is aligned and secure the equipment as needed. Designate a person to keep an eye on the handling. Do not stand under the forks.
- Place the equipment according to the stack requirement indicated on the packaging.
- Ensure the equipment is placed on a flat and stable surface and do not tilt or place the equipment upside down.
- Transport the equipment with proper protective measures to avoid exposure to rain or water.

2.2 Battery Pack

Caution

- Do not use the equipment if it has been dropped, subjected to mechanical shock, submerged in water, or otherwise exposed to water.
- If the equipment has been exposed to rain or snow, please have it evaluated by a professional before using it again.

Tips

The equipment belongs to Class 9 Dangerous Goods and has been approved by UN38.3 (UN38.3: Section 38.3 of the sixth Revised Edition of the Recommendations on the Transport of Dangerous Goods: Section 38.3 of the sixth revised edition of the recommendations on the transport of dangerous goods: Manual of Tests and Criteria) and SN/T 0370.2-2009 "Inspection Procedures for Packaging of Dangerous Goods for Export Part 2: Performance Inspection".

Loading and Unloading Requirements:

Load and unload the equipment according to local laws, regulations, and industry standards. Violent loading and unloading are prohibited. Handle the equipment with care; otherwise, it may break, leak, fire, or explode.

Prior to Transportation:

- Before transportation, ensure that the package is intact and no odor, smoke, or fire occurs. Otherwise, do not transport the equipment.
- Before transportation, ensure that the equipment are securely placed and protected from moisture.
- It is forbidden to place the equipment in the same vehicle or container with common articles such as food, medicine and animal feed.
- If the equipment must be shipped with common goods, please take the following measures:
  - The space between common articles and equipment is ≥ 0.8 m.
  - Use isolators as high as the equipment package for isolation.

- Never arrange the equipment in the same vehicle or container with flammable, explosive or corrosive materials.

During Transportation:

- Please comply with international regulations on the transport of dangerous goods and meet the requirements of the local transport regulatory authorities of the countries of shipment, route, and destination.
- It is prohibited to transport by rail and by air.
- For transport by sea, please observe the transport requirements of the International Maritime Dangerous Goods CODE (IMDG CODE).
- For land transport, please follow the requirements of the European Agreement Concerning the International Carriage of Dangerous Goods by Road (ADR) or the Regulations Concerning Road Transportation of Dangerous Goods (JT/T 617).
- It is recommended to transport by sea or choose a road with good road conditions, and minimize turbulence or tilt in the process of transport.

Chapter 3 Storage Requirements

- The storage location must comply with local laws and regulations.
- Do not unpack the storage equipment.
- Do not store battery packs with other items. Fire fighting facilities such as fire extinguishers that meet requirements must be placed at the battery pack storage site.
- Do not expose the equipment to direct sunlight or to wet, dewy, dirty, rainy, flammable, explosive or corrosive environments.
- The storage location should be well protected against insects and rodents.
- When storing the equipment, place it according to the storage requirements on the package.
- During storage, periodically record the temperature and humidity of the storage environment.
  - Storage temperature: -25°C to 60°C, and 20°C to 30°C is recommended.
  - Relative humidity: 0% to 100% RH. Do not install the battery pack if the battery pack interface is moist and dewy.
- Before storing the battery pack, ensure that the capacity of the battery pack is 40%±5% SOC.
- When storing the battery pack, the warehouse manager needs to count and report the inventory status monthly. When the recharge period is approaching, please arrange to recharge in time.

Storage temperature requirement	**Actual storage temperature**	**Recharge period**
-25°C＜T⩽60°C	T⩽-25°C	Not allowed
	-25°C＜T⩽25°C	15 months
	25°C＜T⩽35°C	9 months
	35°C＜T⩽60°C	6 months

	60°C＜T	Not allowed

- The storage time of battery packs is calculated from the shipping time on the outer packaging. After the battery is properly charged, update the latest charging time (YYYY-MM-DD is recommended).
- It is not recommended to store battery packs beyond the recommended storage period. After first 12 months at the recommended storage temperature, the irreversible capacity loss is 3% to 10%. If battery packs are stored beyond the expiration date, expiry date, they should be checked and tested by qualified personnel before use.
- Please follow the "first-in, first-out" principle when shipping the equipment.
- Recommend charging method: Charging the battery with 157A constant current and 42.6V(3.55V/cell) cconstant voltage until the current reduces to 25A at ambient 20°C ±5°C.

Chapter 4 Operation Requirements

Danger

High Voltage and Hazards:

- Do not perform operations on the equipment with power on (including but not limited to installation, wiring, replacement). Before operation, please make sure all power supplies to the equipment have been disconnected, including but not limited to the grid side, inverter and diesel generator power switches. Operation with power on may lead to fire, electric shock, arcing, or explosion, resulting in personal injury or property loss.
- When the inverter is connected to the grid, do not perform maintenance operations on the DC input cable, such as connecting or disconnecting a string or a component in the string. Otherwise, it may cause an electric shock or an arcing fire.
- Do not power on the equipment before the installation or professional evaluation is complete.
- Do not operate the equipment in bad weather conditions, including but not limited to lightning, rain, snow, or typhoon.
- Do not expose the equipment to high temperatures or heat sources for an extended period of time, such as sunlight, ignition sources, or heaters.
- Do not clean or soak the equipment with water, alcohol, oil, or other liquids to avoid leakage current and electrical shock.
- Do not impact, drag, or step on the equipment. In case of accidental impact, stop using the equipment immediately and contact your sales representative. The equipment shall be subject to inspection and evaluation by professionals before being put into operation again.
- Before operating the equipment, check whether the equipment is damaged. For any abnormality, such as appearance deformation or odor, contact your sales representative instead of disassembling the equipment without authorization.
- If you find that the equipment works abnormally or that the equipment

may cause personal injury, such as appearance deformation, odor, or arcing, stop your operation immediately, report the fact to the person in charge, and take effective measures.

- Wear personal protective equipment such as insulating gloves, insulating shoes, and safety hats while operating the equipment. Do not wear conductive accessories such as metal bracelets, rings, or necklaces.
- Use insulated tools when installing or wiring.
- Equipment that must be grounded is permanently connected to the PGND. Connect the PGND in the first step before connecting cables, and when replacing an equipment, remove the PGND in the last step.
- Do not touch terminals with bare hands or conductors or damp objects. Measure the voltage of the contact before touching a terminal to avoid the risk of electric shock.
- Prevent foreign objects from falling into the equipment while operating the equipment. Otherwise, the equipment may be short-circuited or damaged, or power supply to loads may be derated or power failure may occur, or this may even result in personal injury.
- Before powering off the 10 kV or higher medium-voltage equipment, it is recommended to turn off the inverter and switch off the low-voltage equipment first.
- Touch up paint scratches on the surface of the equipment.

⚠ Warning

- Do not disable any protective devices, including but not limited to protective covers and surge arresters.
- Do not touch the hot surface in the heat dissipation area when the equipment is operating.
- Do not cover the heat dissipation area, and maintain a 300 mm to 600 mm channel for heat dissipation to prevent high temperatures from causing a fire when the equipment is operating.

Caution

- You must obtain a license for power utilities in the country or region where the equipment is located before the equipment can be connected to the grid.
- Do not use damaged or unqualified cables or tools. Before operating the equipment, ensure that all cables and tools comply with the requirements, and keep records. Upon completion of operation, make an inventory and recovery the cables and tools in full to prevent them from being left in the equipment to avoid safety hazards.
- Comply with the power station safety regulations of the country or region where the equipment is located when operating the equipment, including but not limited to operation tickets and work tickets.
- Carbon dioxide fire extinguishers or ABC dry powder fire extinguishers are recommended.
- Keep irrelevant personnel away from the operation site. Please install a temporary fence or set a warning line around the operation site, and attach "No Entry for Irrelevant Personnel" and other signs.
- Do not cover or damage the warning label or nameplate on the equipment. Replace the warning label or nameplate if it is damaged or cannot be clearly recognized due to long-term use.
- Before operating or maintaining the equipment, check whether there is water, snow, or other debris on the top of the equipment. Clean it up when necessary.

Do not use the equipment in the following situations:

- When connected to public infrastructure systems, such as traffic lights or security systems.
- When connected to emergency medical equipment.
- When connected to elevators and other control devices.
- Any other critical systems.

4.1 Equipment Installation

Warning

- Before installing the equipment, check whether the screws installed before delivery are secured. Before delivery, the tightened screws are marked with lines. If the marks are misaligned, the screws are loose. Tighten the screws again.

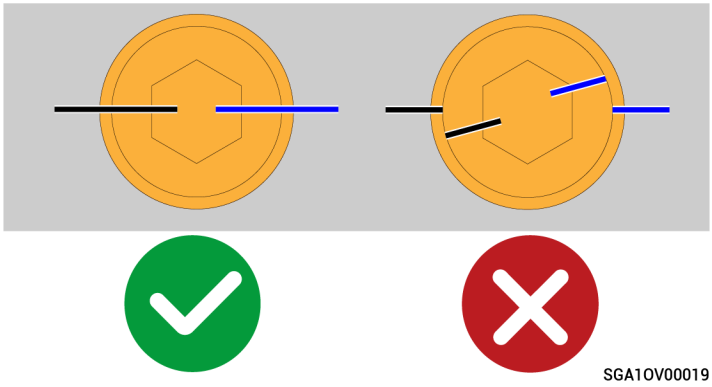

SGA1OV00019

- Get well prepared for the bearing load when handling the equipment to prevent it from falling and causing injury.

Ladder Safety

- Do not use ladders if you are not well-trained or instructed.
- Do not use unqualified ladders, including but not limited to damaged, broken, deformed, or temporary ladders.
- Do not use a ladder that does not meet the load-bearing requirements.
- Use wooden or fiberglass ladders when you climb up for electrical operations.
- A straight ladder must be set at a gradient of 60° to 70°.
- Do not throw objects from heights when operating on a ladder.
- We recommend that you designate a person to monitor when operating on a ladder.
- Lock the door when using a ladder at the entrance of the passageway.

Lifting safety

- Personnel performing lifting operations must undergo relevant training and be qualified before they can take up their posts.
- Share feedback on the editor
- Temporary warning signs or fences must be erected in the lifting area for isolation.
- Share feedback on the editor
- The foundation for lifting operations must meet the load-bearing requirements of the crane.
- Share feedback on the editor
- Before lifting, ensure that the lifting tools are firmly fixed to a fixed object or wall that meets the load-bearing standards.
- Share feedback on the editor
- During lifting, it is strictly forbidden to walk under the boom or the lifting object.
- Share feedback on the editor
- During lifting, do not drag the wire rope or lifting equipment, and do not use hard objects to hit.
- Share feedback on the editor
- During the lifting process, ensure that the angle between the two slings is no greater than 90°, as shown in the figure below.

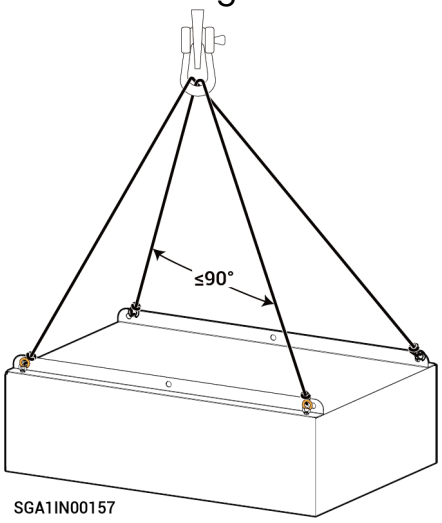

Drilling Safety

- Do not drill holes on the equipment.
- Wear safety goggles and protective gloves when drilling holes.
- Do not place the equipment near drilling positions to prevent debris from falling into the equipment.
- Clean up any debris promptly after drilling.

4.2 Cable Connections

Danger

- Before connecting cables, ensure that the equipment is not damaged. Otherwise, electric shock or fire hazard may occur.
- Before connecting or removing cables, ensure that the upstream and downstream switches of the equipment and the switches on the equipment are turned off.

- Do not intertwine cables or route cables across each other. It is recommended that cables be bundled by category. If you find that the power cord length is not sufficient, you must replace the power cord. It is strictly forbidden to make joints or soldering points in the power cord.
- The positive or negative terminal of the PV string is short to the ground if the power distribution cables are not installed or routed in accordance with the requirements. As a result, the AC-DC short circuit may occur when the equipment is operating, resulting in equipment damage. The equipment damage caused by this is not covered under the equipment warranty.
- The cables must be vertically inserted into the equipment to avoid the terminals being damaged due to lateral force.
- Do not route cables through the air inlet and air outlet of the equipment.
- Do not use cables with damaged insulation. No sharp edges or burrs are allowed in cable holes. Replace cables with insufficient length. Do not extend cables using welding or similar methods.
- The ground impedance of the equipment should meet national and regional standards.
- Verify the cable selection by referring to IEC-60364-5-52 or local laws and regulations if there are changes in cabling methods or environmental conditions such as temperature and humidity.
- Keep cables at least 100 mm away from the heat source to prevent cable aging at high temperatures.

- The lower the ambient temperature is, the more brittle the cable plastic sheath becomes. To prevent sheath cracking during installation, install cables at temperatures above 0°C and handle them with caution when transporting. If cables have been stored in an environment below 0°C for an extended period of time, move cables to an environment above 0°C for at least 24 hours before using again.
- Before installing cables, ensure that cables are properly labeled, insulated, and identified. Connect cables correctly and completely according to the labels and installation instructions.
- For underground cabling, fix cables with cable trays and clips. Before backfilling, reserve a proper cable length to ensure that cables are tightly fitted against the ground in the backfilling area. Otherwise, terminals may be deformed, damaged, or loosened due to stress on cables.
- When installing the equipment, a torque tool with a suitable range should be used to tighten the screws. When tightening with a wrench, ensure that the wrench is not skewed, and the torque value error does not exceed the specified 10%.

4.3 Safety Tips for Working at Heights

- Comply with the local regulations on working at heights.
- Operators engaged in working at heights shall behave in strict accordance with the safety regulations on working at heights, and the Company shall not be liable for accidents caused by the violation of the safety regulations on working at heights.
- Carrying out work at more than 2 meters above the ground is considered as work at heights.
- Do not work at heights in one of the following conditions: steel pipe not drying up and other conditions that may cause danger.
- Before working at heights, carefully check the climbing tools and safety appliances, such as safety hats, safety belts, ladders, platforms, scaffolds, and lifting equipment, and take immediate improvement measures or refuse to work at heights if any requirements are not met.
- Mark out a hazardous area on the work-at-height scene and set an eye-catching sign indicating that unauthorized personnel are prohibited from entering.
- Set guardrails and signs at the edges and holes in the work-at-height area to prevent accidental falls.
- It is strictly forbidden to stack scaffolds, platforms, or other things on the ground below the work-at-height area. Personnel on the ground should be strictly prohibited from staying or passing through directly below the work-at-height area.
- Try to avoid working on the upper and lower platforms at the same time. If this cannot be avoided, a special catch platform should be set, or other protective measures should be taken between the upper and lower platforms. It is strictly forbidden to stack tools, materials, and other things on the upper platform.
- Take protection measures, wear a safety hat and a safety belt or a waist rope, tie it to a solid and rigid structural member. It is strictly forbidden to

hang it on an unstable moving object or metal with sharp corners to prevent accidental falls due to hook slip.

- Carry the operating apparatuses and tools well and prevent them from falling and injuring others.
- Workers at heights are strictly forbidden from throwing objects from heights to the ground nor from the ground to heights. Rigid ropes, hoists, aerial lifts, or cranes should be used to transport objects.
- Horseplay is strictly forbidden while working at heights, and resting in the work-at-height area is prohibited.
- After work at heights, climbing tools, safety appliances, personal protective equipment, and other things shall be cleaned up or taken away from the scene, and the scene shall be restored to its original state.

4.4 Equipment Maintenance and Replacement

- Before maintaining or replacing the equipment, power off and wait for the delay time as instructed on the label on the equipment before operation.
- When maintaining the power equipment or power distribution equipment at the downstream direction of the power supply equipment, turn off the output switch of the power supply equipment.
- When maintaining the power distribution equipment or power equipment at the downstream direction of the power supply equipment, turn off the output switch of the power supply equipment. To maintain a load, disconnect the load from the power switch.
- During equipment maintenance, attach labels, for example, "Do Not Turn On", on the upstream and downstream switches or circuit breakers and set warning signs to prevent accidental reconnection. Power up and put the equipment back into operation only after trouble is eliminated, or replacement is complete.
- Damaged cables, if any, should be replaced by professionals.

Chapter 5 Introduction to energy storage system

5.1 Product Introduction

5.1.1 Sigen Inverter

Product code	Model No.	Name	Function specification
Sigen PV (50–125)M1	Sigen PV 50M1	Sigen PV Inverter 50 kW M1 Version	PV inverter, suitable for PV scenarios, must be used with PV modules.
	Sigen PV 60M1	Sigen PV Inverter 60 kW M1 Version	
	Sigen PV 80M1	Sigen PV Inverter 80 kW M1 Version	
	Sigen PV 100M1	Sigen PV Inverter 100 kW M1 Version	
	Sigen PV 110M1	Sigen PV Inverter 110 kW M1 Version	
	Sigen PV 125M1	Sigen PV Inverter 125 kW M1 Version	
	Sigen PV 50M1-CN	Sigen PV Inverter 50 kW M1 Version China	
	Sigen PV 60M1-CN	Sigen PV Inverter 60 kW M1 Version China	
	Sigen PV 80M1-CN	Sigen PV Inverter 80 kW M1 Version China	
	Sigen PV 100M1-CN	Sigen PV Inverter 100 kW M1 Version China	
	Sigen PV 110M1-CN	Sigen PV Inverter 110 kW M1 Version China	
	Sigen PV	Sigen PV Inverter 125 kW M1	

	125M1-CN	Version China	
	Sigen PV 50M1-AU	Sigen PV Inverter 50 kW M1 Version Australia	
	Sigen PV 99.9M1-AU	Sigen PV Inverter 99.9 kW M1 Version Australia	
	Sigen PV 110M1-AU	Sigen PV Inverter 110 kW M1 Version Australia	
	Sigen PV 125M1-AU	Sigen PV Inverter 125 kW M1 Version Australia	
Sigen PV (50–125)M1-HYA	Sigen PV 50M1-HYA	Sigen Hybrid Inverter 50 kW M1 Version	On-grid hybrid inverter, suitable for on-grid PV storage scenarios, must be used with PV modules and SigenStack.
	Sigen PV 60M1-HYA	Sigen Hybrid Inverter 60 kW M1 Version	
	Sigen PV 80M1-HYA	Sigen Hybrid Inverter 80 kW M1 Version	
	Sigen PV 100M1-HYA	Sigen Hybrid Inverter 100 kW M1 Version	
	Sigen PV 110M1-HYA	Sigen Hybrid Inverter 110 kW M1 Version	
	Sigen PV 125M1-HYA	Sigen Hybrid Inverter 125 kW M1 Version	
	Sigen PV 50M1-HYA-CN	Sigen Hybrid Inverter 50 kW M1 Version China	
	Sigen PV 60M1-HYA-CN	Sigen Hybrid Inverter 60 kW M1 Version China	
	Sigen PV 80M1-HYA-CN	Sigen Hybrid Inverter 80 kW M1 Version China	
	Sigen PV 100M1-HYA-CN	Sigen Hybrid Inverter 100 kW M1 Version China	
	Sigen PV 110M1-HYA-CN	Sigen Hybrid Inverter 110 kW M1 Version China	

	Sigen PV 125M1-HYA-CN	Sigen Hybrid Inverter 125 kW M1 Version中国区	
	Sigen PV 50M1-HYA-AU	Sigen Hybrid Inverter 50 kW M1 Version Australia	
	Sigen PV 99.9M1-HYA-AU	Sigen Hybrid Inverter 100 kW M1 Version Australia	
	Sigen PV 110M1-HYA-AU	Sigen Hybrid Inverter 110 kW M1 Version Australia	
	Sigen PV 125M1-HYA-AU	Sigen Hybrid Inverter 125 kW M1 Version Australia	
Sigen PV (50–125)M1-HYB	Sigen PV 50M1-HYB	Sigen Hybrid Inverter 50 kW M1 Version With Backup Port	Off-grid and on-grid hybrid inverter, suitable for off-grid and on-grid PV storage scenarios, must be used with PV modules and SigenStack.
	Sigen PV 60M1-HYB	Sigen Hybrid Inverter 60 kW M1 Version With Backup Port	
	Sigen PV 80M1-HYB	Sigen Hybrid Inverter 80 kW M1 Version With Backup Port	
	Sigen PV 100M1-HYB	Sigen Hybrid Inverter 100 kW M1 Version With Backup Port	
	Sigen PV 110M1-HYB	Sigen Hybrid Inverter 110 kW M1 Version With Backup Port	

5.1.2 Sigen Battery

Product code	Model No.	Name	Function specification
BC-BST	SigenStack BC M2-1C-BST	Sigen Battery Controller M2 Version 1C Boost	Battery controller (including DC-DC boost converter module).
	SigenStack BC M2-0.5C-BST	Sigen Battery Controller M2 Version 0.5C Boost	
BC	SigenStack BC M2-0.5C	Sigen Battery Controller M2 Version 0.5C	Battery controller.
BAT	SigenStack BAT 12.0	Sigen Battery 12.0	Energy storage battery.

Base MAIN	SigenStack Base MAIN-0.5C	Sigen Battery Main Base 0.5C	Main base, for the Main stack containing the battery controller.
	SigenStack Base MAIN-1C	Sigen Battery Main Base 1C	
Base SUB	SigenStack Base SUB-0.5C	Sigen Battery Sub Base 0.5C	Sub-base, for the Sub stack containing the energy storage battery top cover.
	SigenStack Base SUB-1C	Sigen Battery Sub Base 1C	
Base 4S	SigenStack Base 4S-0.5C	Sigen Battery Base 4 series 0.5C	Quadruple base, including one main base and three sub-bases.
Cover	SigenStack Cover	Sigen Battery Cover	Energy storage battery top cover, for the Sub stack containing the sub-base.

5.1.3 Sigen Power Sensor

Product code	Model No.	Name	Function specification
Power Sensor	Sigen Sensor TP-CT300-DH (SDM630MCT 40mA/300A)	Sigen Power Sensor Three Phase External CT 300 A DH	Equipped with grid connection point data collection to achieve zero-power grid connection functionality.
	Sigen Sensor TP-CT600-DH (SDM630MCT V2/600A)	Sigen Power Sensor Three Phase External CT 600 A DH	
	Sigen Sensor TPX-CH (DTSU666)	Sigen Power Sensor Three Phase Without CT CH	
	Sigen Sensor TP-CT300-DH CN	Sigen Power Sensor Three Phase External CT 300 A DH China	

	Sigen Sensor TP-CT600-DH CN	Sigen Power Sensor Three Phase External CT 600 A DH China	
	Sigen Sensor TPX-DH CN	Sigen Power Sensor Three Phase Without CT China	

5.1.4 Sigen Communication Module

Product code	Model No.	Name	Function specification
Sigen CommMod	Sigen CommMod	Sigen Communication Module	If it's used with our inverters, the communication between inverters and management systems should be realized through 4G.

5.1.5 Sigen Communication Bridge

Product code	Model No.	Name	Function specification
Sigen CommBridge	Sigen CommBridge	Sigen Communication Bridge	When used with our company's C&I inverters or gateways, the communication distance on the inverter or gateway side can be extended to 800 meters.

5.1.6 Sigen Data Logger

Product code	Model No.	Name	Function specification
Sigen Logger	Sigen Logger A1-01	Sigen Data Logger	When used with our company's inverters or gateways, it can be used for real-time monitoring and intelligent management of photovoltaic power generation and energy storage system (ESS).

5.2 Appearance Introduction

5.2.1 Sigen PV (50–125)M1 Inverter

Dimensions

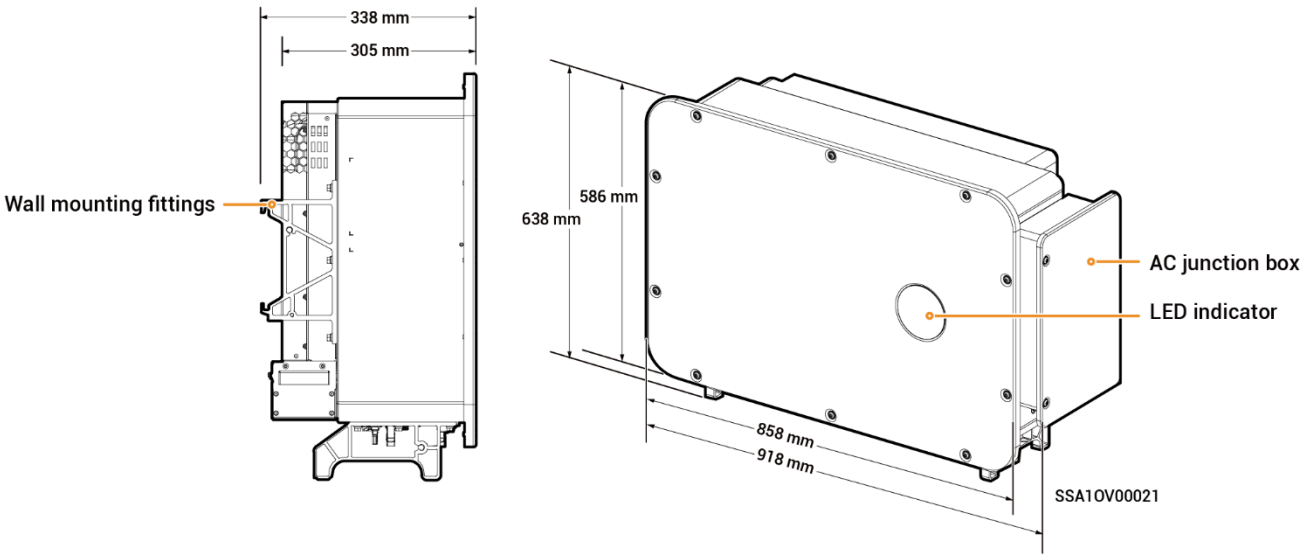

Port Descriptions

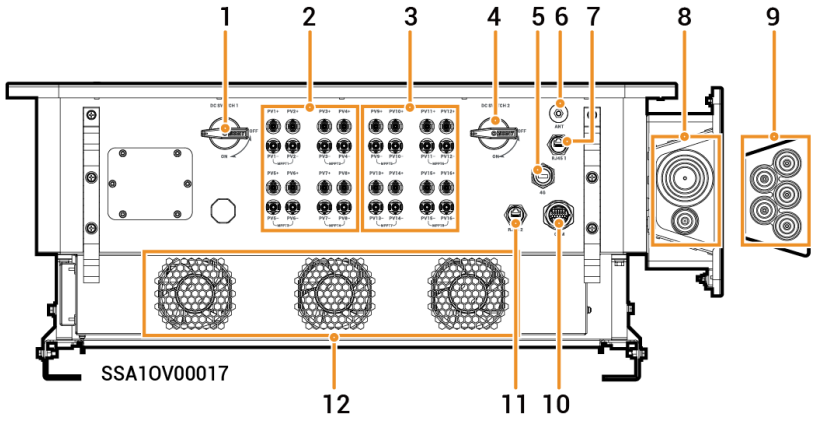

S/N	Name	Marking
1	DC switch 1	DC SWITCH 1
2	DC input terminal group 1 (Controlled by DC SWITCH 1)	PV1 to PV8
3	DC input terminal group 2 (Controlled by DC SWITCH 2)	PV9 to PV16
4	DC switch 2	DC SWITCH 2
5	Sigen CommMod interface	4G

6	Antenna interface	ANT
7	Network interface	RJ45 1
8	Routing hole for multi-core cable	-
9	Routing hole for single-core cable	-
10	Communication interface	COM
11	Network interface	RJ45 2
12	Cooling fan	-

5.2.2 Sigen PV (50–110)M1-HYA Inverter

Dimensions

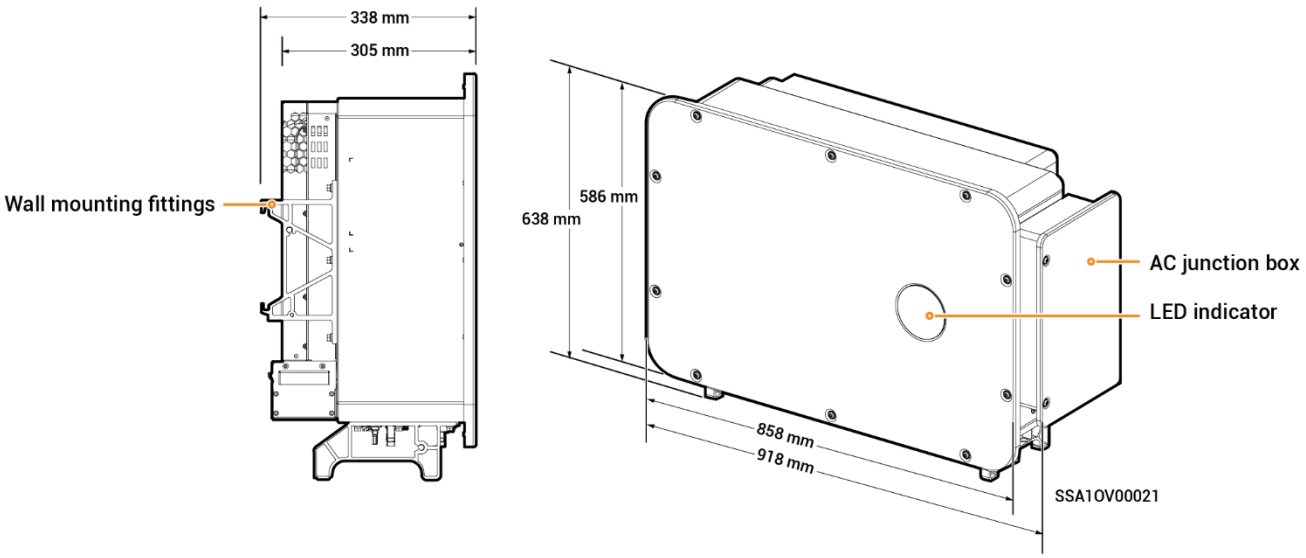

Port Descriptions

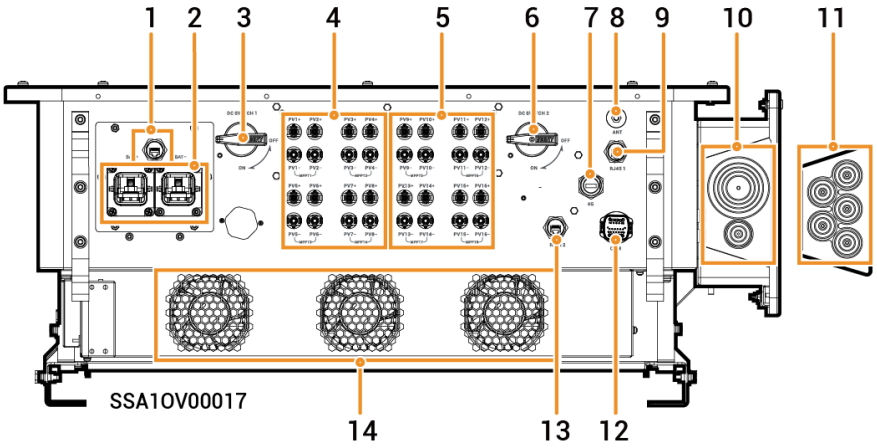

S/N	Name	Marking
1	SigenStack network interface	RJ45 3
2	SigenStack DC cable interface	BAT+/BAT-
3	DC switch 1	DC SWITCH 1
4	DC input terminal group 1 (Controlled by DC SWITCH 1)	PV1 to PV8
5	DC input terminal group 2 (Controlled by DC SWITCH 2)	PV9 to PV16
6	DC switch 2	DC SWITCH 2
7	Sigen CommMod interface	4G

8	Antenna interface	ANT
9	Network interface	RJ45 1
10	Routing hole for multi-core cable	-
11	Routing hole for single-core cable	-
12	Communication interface	COM
13	Network interface	RJ45 2
14	Cooling fan	-

5.2.3 Sigen PV (50–110)M1-HYB Inverter

Dimensions

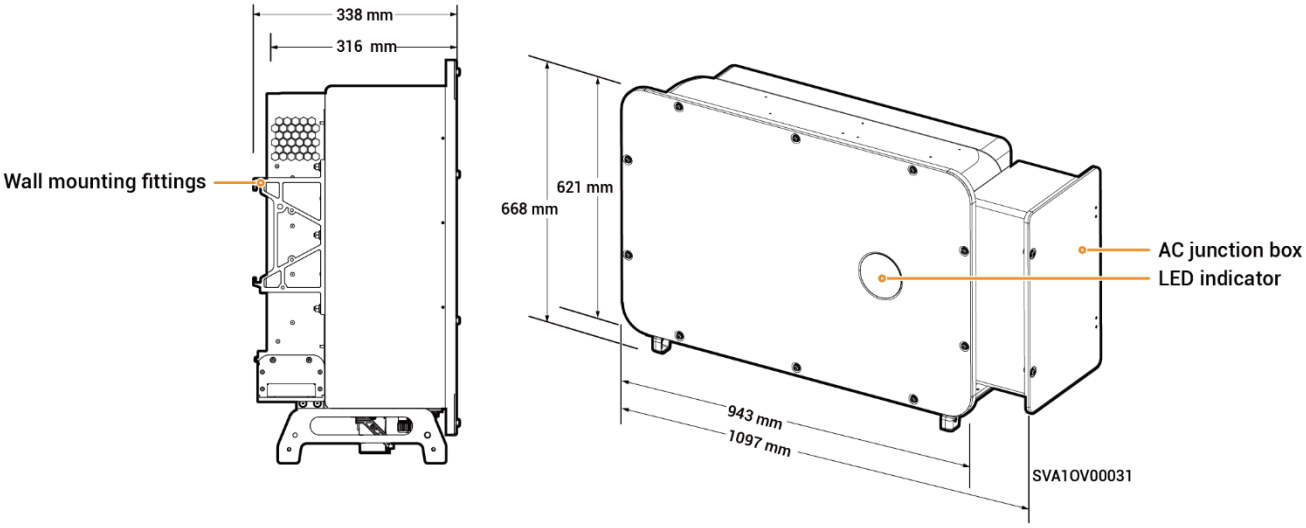

Port Descriptions

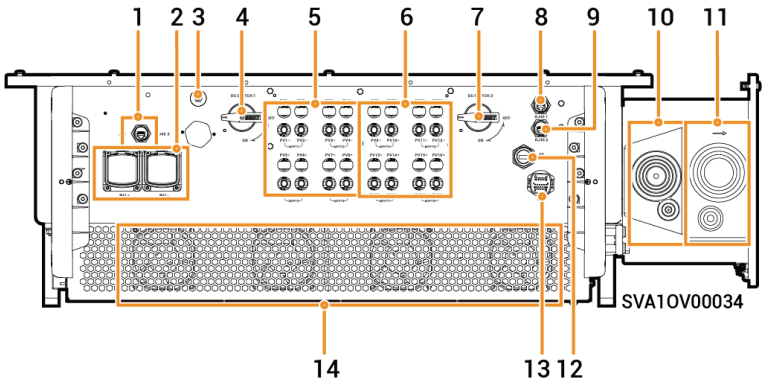

S/N	Name	Marking
1	SigenStack network interface	RJ45 3
2	SigenStack DC cable interface	BAT+/BAT-
3	Antenna interface	ANT
4	DC switch 1	DC SWITCH 1
5	DC input terminal group 1 (Controlled by DC SWITCH 1)	PV1 to PV8
6	DC input terminal group 2 (Controlled by DC SWITCH 2)	PV9 to PV16
7	DC switch 2	DC SWITCH 2
8	Network interface	RJ45 1
9	Network interface	RJ45 2
10	Wire-in port of backup loads	-

11	Wire-in port of power grid	-
12	Sigen CommMod interface	4G
13	Communication interface	COM
14	Cooling fan	-

5.2.4 SigenStack

Dimensions

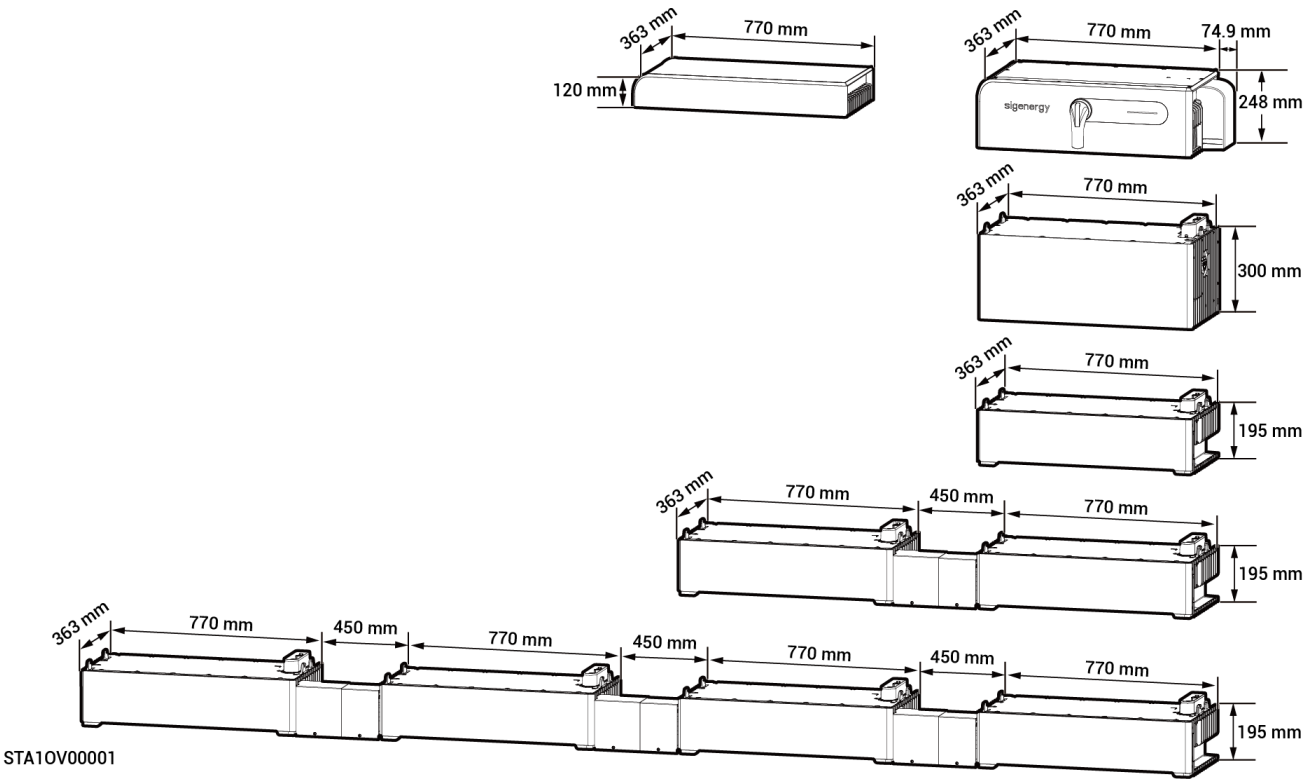

STA1OV00001

Port Descriptions

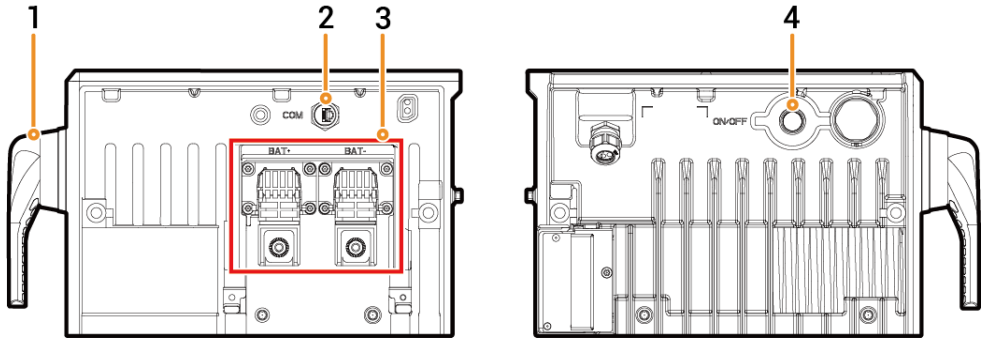

STA1OV00003

S/N	Name	Marking
1	Disconnecting switch	-
2	Communication port	COM
3	Power port	BAT+/BAT-
4	Power button	ON/OFF

5.2.5 Sigen Communication Bridge

Dimensions

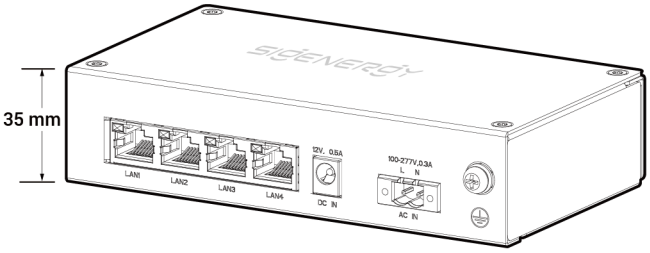

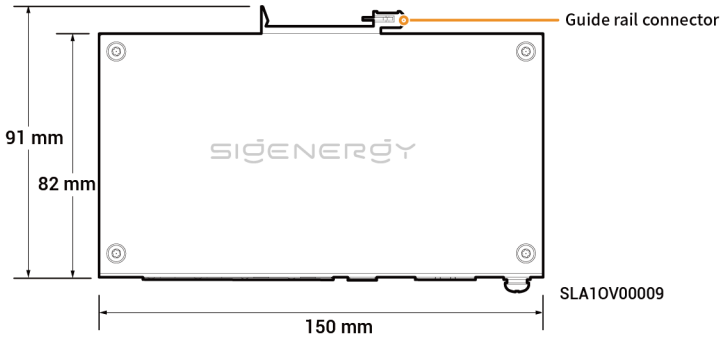

Port Descriptions

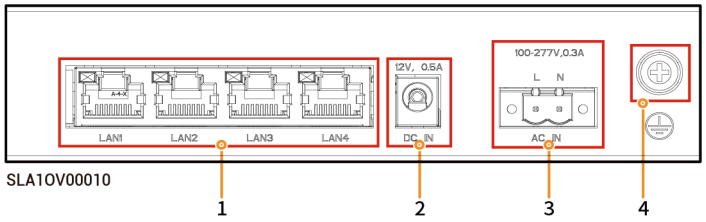

S/N	Name	Marking
1	LAN interface	LAN1/LAN2/LAN3/LAN4
2	12V DC power input port	DC IN 12V，0.5A
3	220V AC power input port	AC IN 100-277V，0.3A
4	Protective grounding point	-

5.2.6 Sigen Data Logger

Dimensions

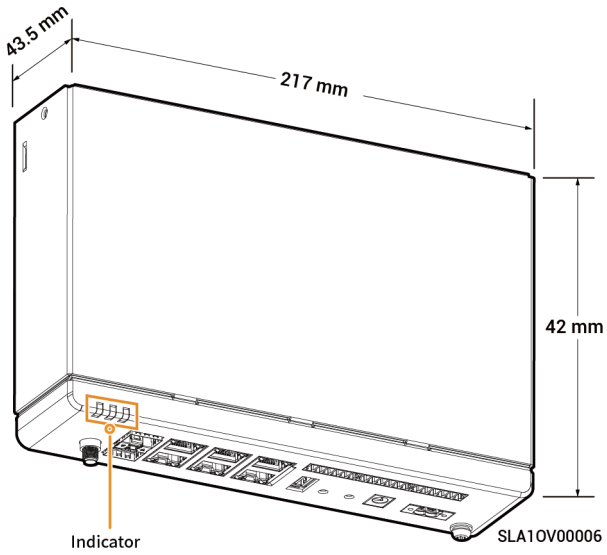

Port Descriptions

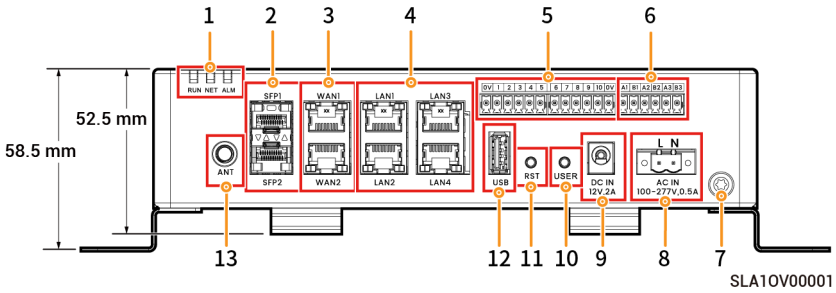

S/N	Name	Marking
1	LED indicator	RUN、NET、ALM
2	SFP fiber optic interface	SFP1/SFP2
3	WAN network cable interface	WAN1/WAN2
4	LAN interface	LAN1/LAN2/LAN3/LAN4
5	Digital input port	OV/1/2/3/4/5/6/7/8/9/10/OV
6	RS-485 interface	A1/B1/A2/B2/A3/B3
7	Protective grounding point	-
8	220V AC power input port	AC IN 100-277V，0.5A
9	12V DC power input port	DC IN 12V，2A
10	USER button (short press to open AP hotspot)	USER
11	RST button (short press to	RST

	reset the equipment)	
12	Communication interface	USB
13	Cooling fan	ANT

5.3 Label Description

Symbols	Definition
	Danger! High Voltage High voltage exists inside the equipment when powered on. Do not open the casing when the equipment is running. Any maintenance or servicing operations must be performed by trained and skilled electrical engineers.
	Warning! Life-threatening High contact current exists upon power-on. Ensure that the equipment is properly grounded before power-on. Potential risks exist when the equipment is operating. Please take protective measures before operating the equipment.
	After the equipment is powered off, internal components discharge in a delay time. Wait for the duration according to the delay time on the label until the equipment is fully discharged.
	Warning! Risk of burns. The surface of the heat dissipation area is hot when the equipment is running. Do not touch it to avoid burns.
	Please refer to the instructions to operate the equipment.
	Earthing mark

5.4 Supported Power Supply Methods for the Power Grid

- The grid supply methods supported include TN-S, TN-C, TN-C-S, TT and IT.
- When TT is used as the power supply technique for the power grid, the voltage between N and PE is required to be < 30 V.

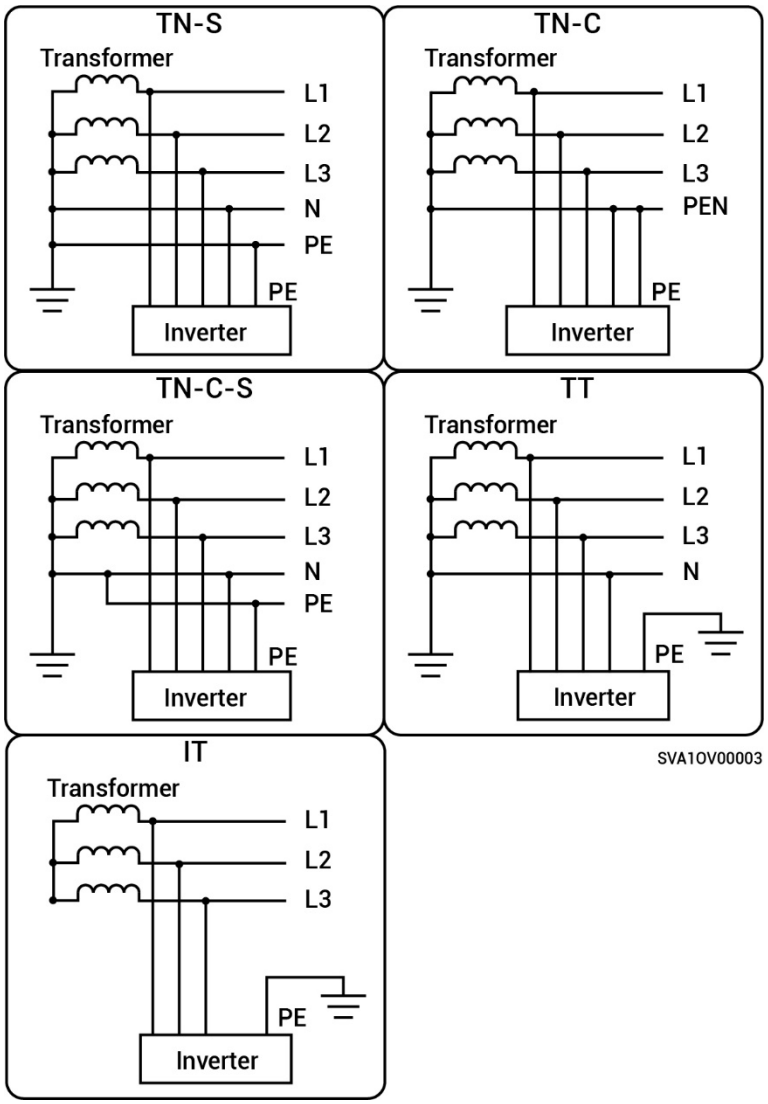

5.5 System wiring introduction

Our products can be used in C&I on-grid solar systems. The on-grid solar system consists of PV strings, inverters, distribution panels, and other components.

Non-backup wiring diagram (number of inverters < 100)

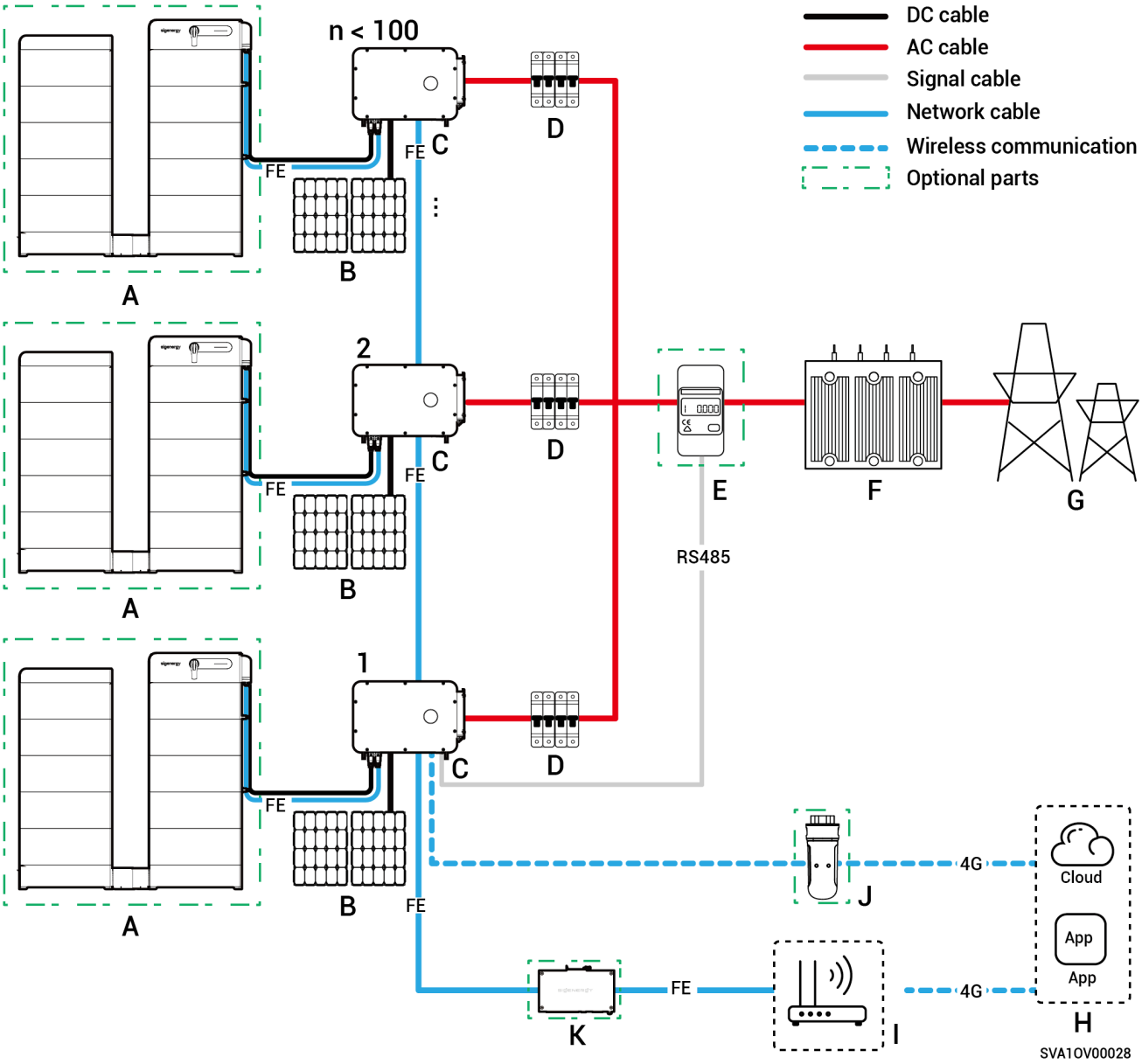

A. SigenStack **B.** PV panel **C.** Inverter **D.** DC Switch

E. Power sensor **F.** Box-type substation **G.** Power grid

H. mySigen **I.** Router **J.** CommMod **K.** Sigen CommBridge

Tips

- The rated voltage of the AC switch connected to each inverter must be ≥ 500 Va.c., The recommended specifications for the rated current are as follows:
  - ➢ For inverters with a power rating of 50 kW or 60 kW: rated current is 125 A

- For inverters with a power rating of 75 kW or 80 kW: rated current is 160 A
- For inverters with a power rating of 99.9 kW or 100 kW: rated current is 200 A
- For inverters with a power rating of 110 kW or 125 kW: rated current is 250 A

- Each inverter must be equipped with an AC switch, and multiple inverters cannot be connected to one AC switch at the same time.
- It is recommended to use Fast Ethernet and WLAN for communication with inverters. When free 4G traffic of CommMod runs out, users must replace an SIM card.

Backup wiring diagram (1 < number of inverters ≤ 160)

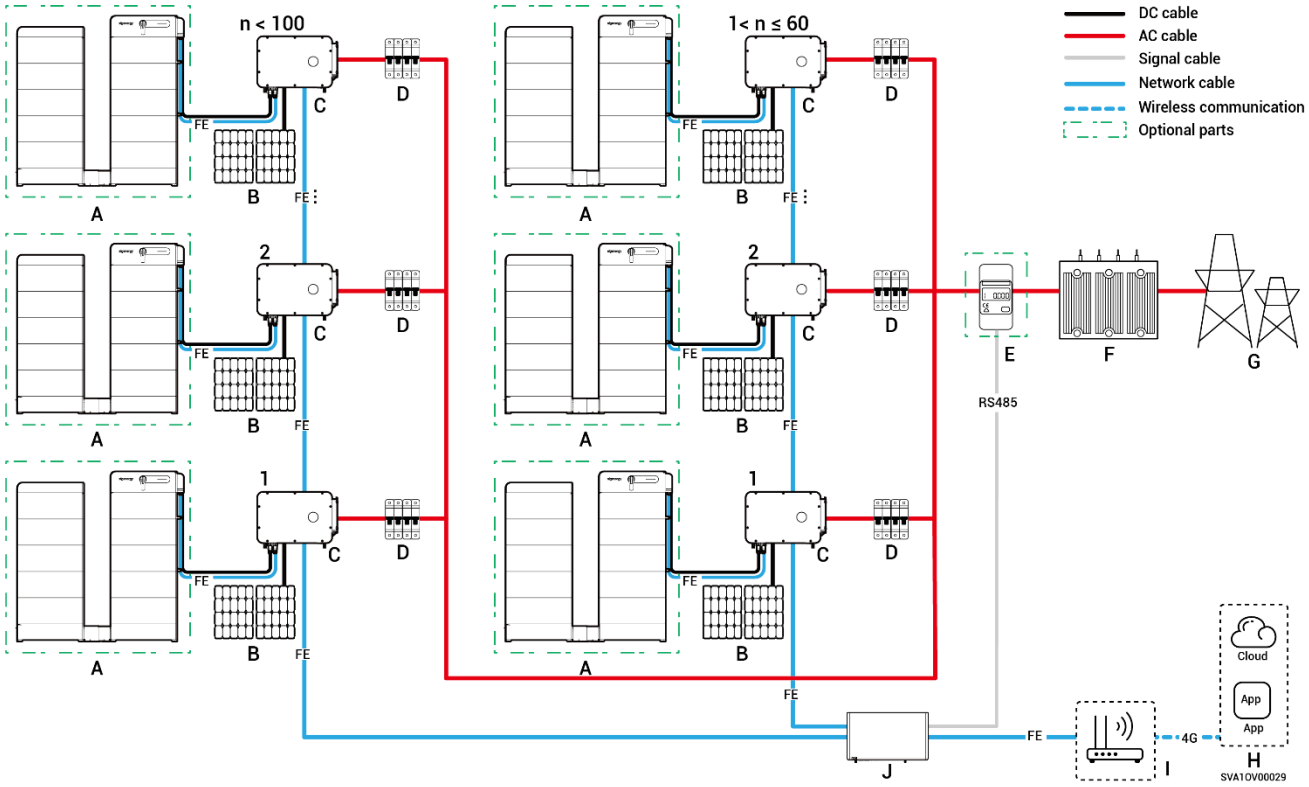

A. SigenStack **B.** PV panel **C.** Inverter **D.** DC Switch

E. power sensor **F.** Box-type substation **G.** Power grid

H. mySigen **I.** Router **J.** Sigen Logger

Tips

- The rated voltage of the AC switch connected to each inverter must be ≥ 500 Va.c., The recommended specifications for the rated current are as

follows:

- For inverters with a power rating of 50 kW or 60 kW: rated current is 125 A
- For inverters with a power rating of 75 kW or 80 kW: rated current is 160 A
- For inverters with a power rating of 99.9 kW or 100 kW: rated current is 200 A
- For inverters with a power rating of 110 kW or 125 kW: rated current is 250 A

- One data collector can be connected to up to 160 inverters.

Backup Power Networking Diagram (Inverters ≤ 50 units)

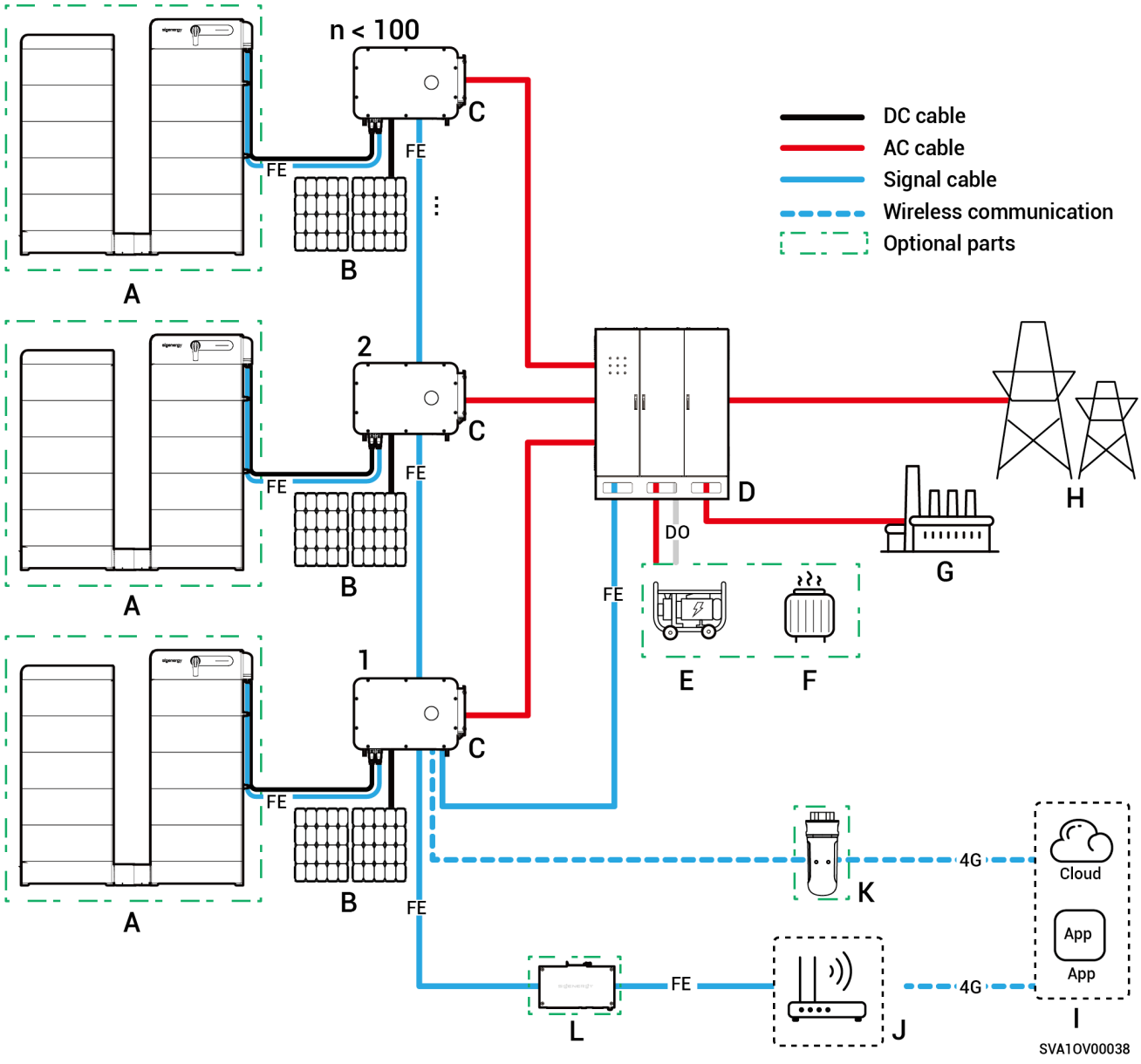

A. SigenStack **B.** PV panel **C.** Inverter **D.** Gateway **E.** Generator
F. Smart load **G.** Backup load **H.** Power grid **I.** mySigen **J.** Router
K. Sigen CommBridge

Tips

- The rated voltage of the AC switch connected to each inverter must be ⩾ 500 Va.c., The recommended specifications for the rated current are as follows:
  - For inverters with a power rating of 50 kW or 60 kW: rated current is 125 A
  - Share feedback on the editor
  - For inverters with a power rating of 75 kW or 80 kW: rated current is 160 A
  - Share feedback on the editor
  - For inverters with a power rating of 99.9 kW or 100 kW: rated current is 200 A
  - Share feedback on the editor
  - For inverters with a power rating of 110 kW or 125 kW: rated current is 250 A
- Each inverter must be equipped with an AC switch, and multiple inverters cannot be connected to one AC switch at the same time.
- Share feedback on the editor
- It is recommended to use Fast Ethernet and WLAN for communication with inverters. When free 4G traffic of CommMod runs out, users must replace an SIM card.

Chapter 6 Location Requirements

Tips

- **Before installing the equipment, please be sure to carefully read the following installation requirements. The company will not be liable for any functional abnormalities or damages arising from the operation of the equipment if the installation requirements are not followed, even in cases leading to personal safety incidents.**
- **During actual installation, the selection of installation location should comply with local firefighting, environmental protection regulations, and other relevant laws. The specific installation location planning should be subject to the installer or engineering, procurement, and construction (EPC) contracts.**

Installation Environment Requirements

- Do not install the equipment in a smoky, flammable, or explosive environment.
- Do not install the equipment in an environment with conductive metal dust or magnetic dust.
- Do not install the equipment in an environment that is prone to mold and fungi.
- Avoid exposing the equipment to direct sunlight, rain, standing water, snow, or dust. Install the equipment in a sheltered place. Take preventive measures in operating areas prone to natural disasters such as floods, mudslides, earthquakes, and typhoons.
- Do not install the equipment in an environment with strong electromagnetic interference.
- The temperature and humidity of the installation environment should meet equipment requirements.
- The equipment should be installed in an area that is at least 500 m away from corrosion sources that may result in salt damage or acid damage (corrosion sources include but are not limited to seaside, thermal power

plants, chemical plants, smelters, coal plants, rubber plants, and electroplating plants).

Installation Location Requirements

- Do not tilt the equipment or place it upside down. Ensure that the equipment is horizontally installed.
- Do not install the equipment in a place with fire hazards or is prone to moisturizing.
- Do not install the equipment in a sealed, poorly ventilated location without fire protection measures and difficult access for firefighters.
- Do not install the equipment under water sources, including but not limited to water pipes and air conditioner outlet windows, where condensate or water leakage may occur. Otherwise, liquid may enter the equipment and cause short circuit.
- Do not install the equipment in mobile scenarios such as recreational vehicles, cruise ships, and trains.
- The equipment is hot when it is operating. If the equipment is installed indoors, please ensure good indoor ventilation and avoid significant indoor temperature rise by more than 3°C while the equipment is operating. Otherwise, the equipment will be derated.
- The equipment generates heat when it is operating. Do not install the equipment in areas easily accessible to heat dissipation surfaces.
- You are advised to install the equipment in a location where you can easily access, install, operate, maintain it, and view the indicator status.
- The on-grid/off-grid switchover makes noise. It is recommended that the equipment be installed near the AC distribution box, away from the rest area.
- The recommended length for the AC cable between the inverter and the upstream transformer should be ≤ 600 meters. If the length exceeds 600 meters, it may affect the parallel operation of the inverters. Please contact Sigenergy for further advice.

Installation Base Requirements

- Do not install the equipment on a flammable base.
- The installation base should meet the load-bearing requirement and should be free of adverse geological conditions including but not limited to rubber soil and soft soil. Solid brick-concrete structures and concrete walls are recommended.
- The installation base should be flat, and the installation area should meet the installation space requirements.
- No plumbing or electrical alignments should be inside the installation base to avoid potential drilling hazards during equipment installation.

PV-only installation scenario

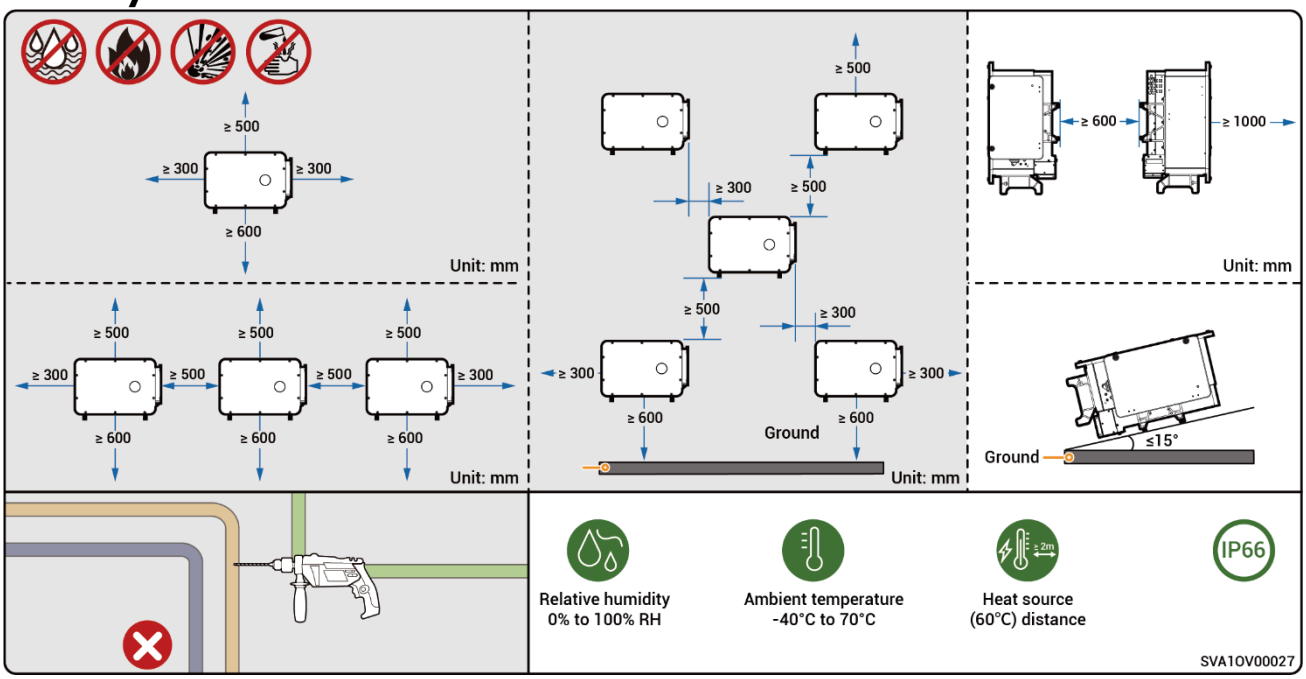

PV-storage installation scenario

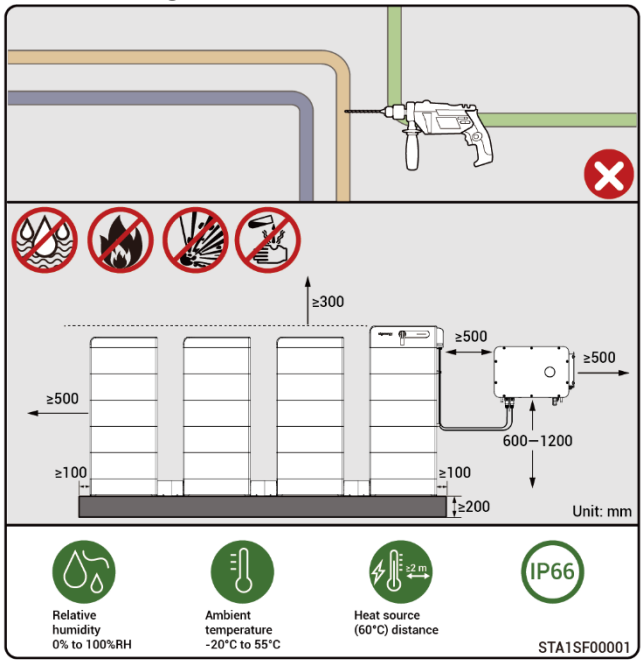

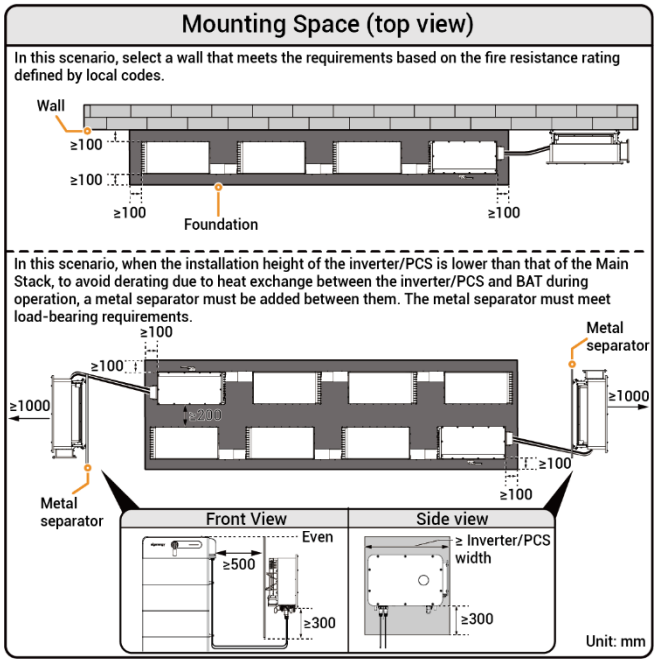

Chapter 7 System Operation

7.1 LED Indicator State

Inverter Indicator

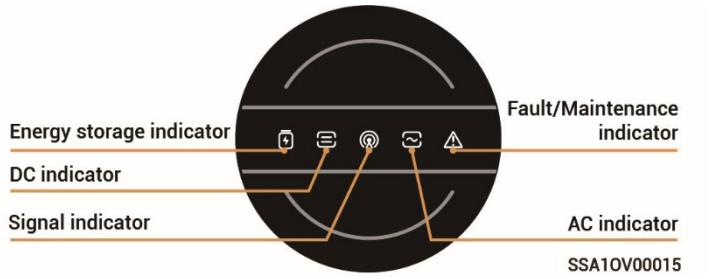

Indicator	Color	State	Description
		-	All SigenStacks lie dormant.
		Breathing blink	All SigenStacks are connected but not running.
		Flash	SigenStack is charging.
		Flash	SigenStack is discharging.
		Always on	Some SigenStacks are faulty.
		-	The DC side is not connected.
		Breathing blink	The DC side is connected but not running.
		Always on	The DC side is running.
		Flash	The DC side is faulty.
		Always on	The inverter is faulty.
		-	The AC side is not connected.
		Breathing blink	The AC side is connected but not running.
		Always on	Grid-connected operation.
		Always on	Off-grid operation.

Indicator	Color	State	Description
		Flash	Off-grid overload operation.
		Flash	The AC side is faulty.
		Always on	The inverter is faulty.
		-	The management system is not connected.
		Flash	Connected to local App.
		Always on	Connected to the management system using an FE or WLAN.
		Always on	Connected to the management system over 4G.
		Flash	Insufficient traffic for Sigen CommMod.
		-	No alarm or local maintenance.
		Flash	Local maintenance in progress or shutdown using commands.

CommMod Indicator

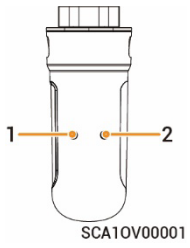

S/N	Name	State	Description
1	Power indicator	-	-
2	Network state indicator	Slow flashing (200 ms on/1800 ms off)	The network is being connected
		Slow flashing (1800 ms on/200 ms off)	Standby.
		Quick flashing (125 ms on/125 ms off)	Data is being transferred.

Chapter 8 Equipment Installation and Wiring

- Only company authorized personnel should install and connect the equipment. For detailed operation methods, please refer to the installation guide corresponding to the device model.
- Parts and accessories supplied with the packing box are personal assets of the owner and must be kept safe.

Chapter 9 mySigen App Query

The App can be downloaded in the following two ways. For details, see ***mySigen App User Manual***.





Chapter 10 System Maintenance

10.1 Routine Maintenance

To ensure the long-term running of the equipment, you are advised to perform routine maintenance according to this section.

Inspection content	Inspection method	Power off or not	Maintenance cycle
System cleaning	Check the device regularly for shielding and dirt. If so, clean it up. Do not use tools that may cause electric shock or insulation damage, such as wire brushes and during the cleaning process.	Yes	Once every 3 months
System operating state	● Check whether the equipment appearance is damaged or deformed. ● Check for noise when the equipment is operating. ● Check whether the equipment parameters are correctly set when the equipment is operating.	No	Once every 6 months
Electrical connection	● Check whether cable terminals are tightly connected. ● Check whether cable sheath is damaged. ● Check whether scratches exist on the surface where the cable contacts the metal. ● Check whether unused routing holes are sealed.	Yes	Check once every 6 months after creating new systems and once every 6 to 12 months thereafter.

Grounding reliability	Check whether the ground cable is properly and reliably connected.	No	Check once every 6 months after creating new systems and once every 6 to 12 months thereafter.

10.2 System Power-on/Power-off

Danger

High Voltage and Hazards:

Wear personal protective equipment such as insulating gloves, insulating shoes, and safety hats while operating the equipment. Do not wear conductive accessories such as metal bracelets, rings, or necklaces.

10.2.1 System power-off

1. Power the equipment off in the App.

Owner's Account

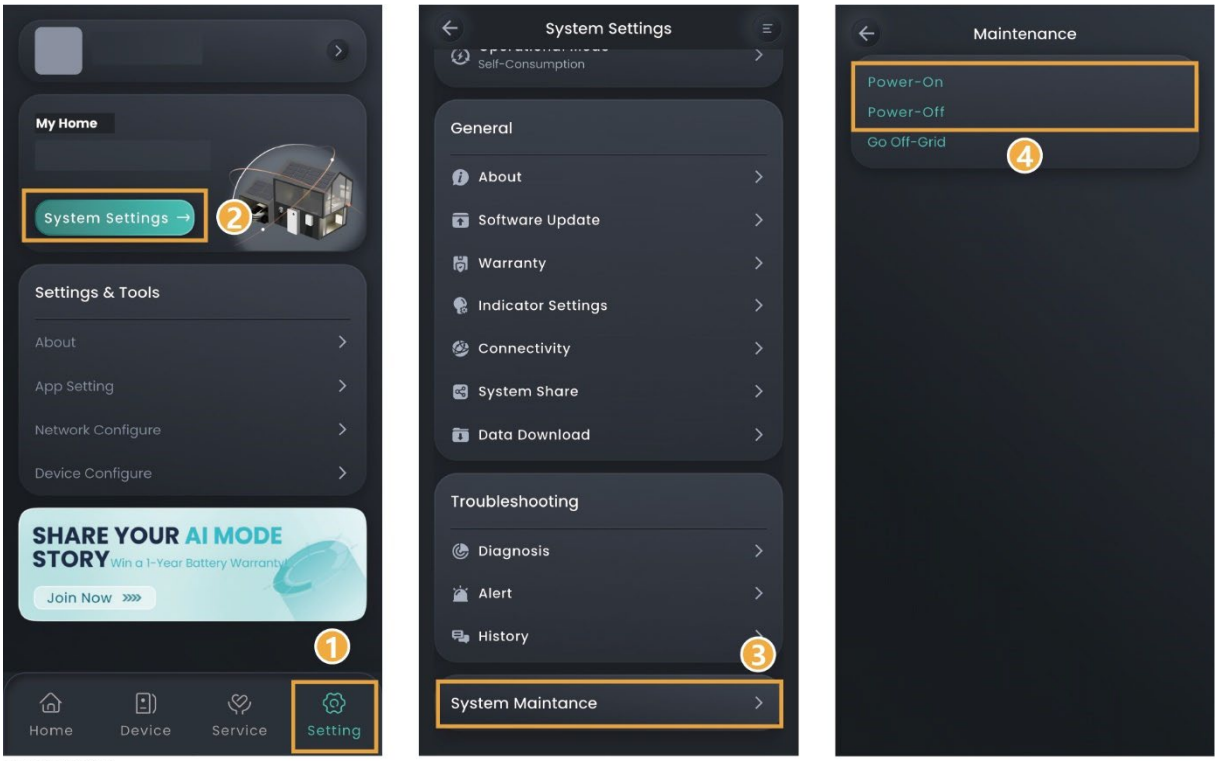

MSA1CM00071

Installer's Account

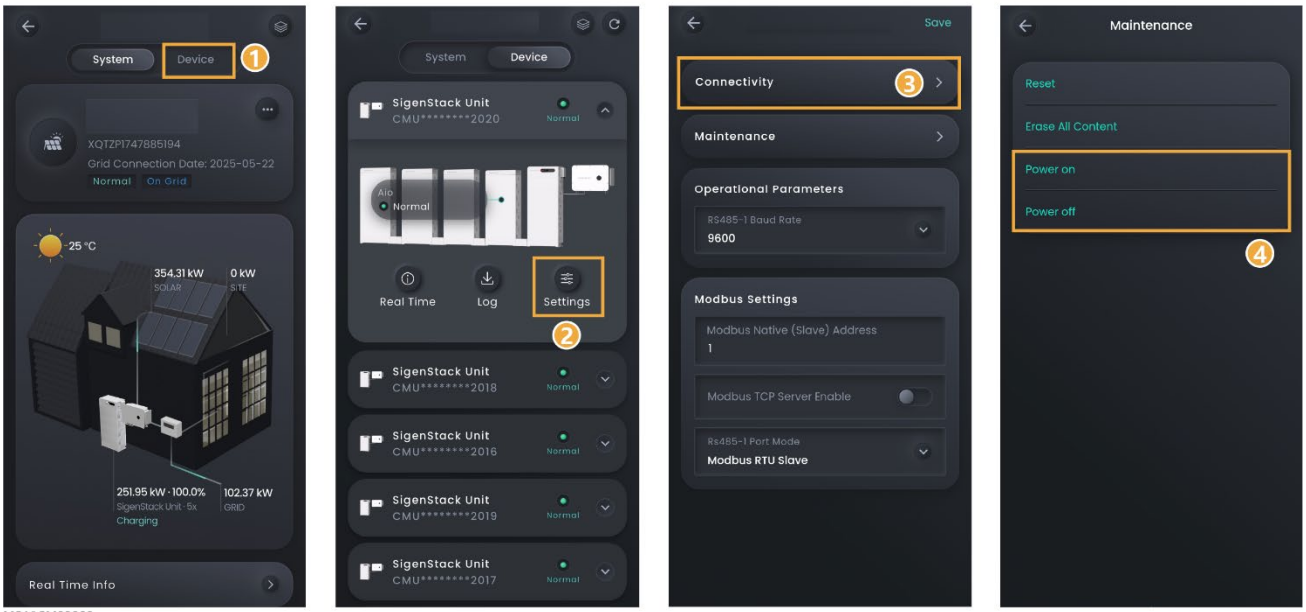

MSA1CM00060

2. Turn off the switch connected to the equipment in the backup power distribution panel.
3. Turn DC SWITCH on the equipment to the OFF position.
4. After all LED indicators on the equipment go off, wait for the corresponding time as indicated on the label on the equipment before proceeding.

> **Warning**
>
> There is residual current and the equipment is hot immediately after the equipment is powered off. Operating the equipment immediately upon power off may lead to electric shock or burns.

10.2.2 System power-on

1. Turn DC SWITCH on the equipment to the ON position.
2. Turn on the switch connected to the equipment in the backup power distribution panel.
3. Power the equipment on in the App. For details, see Step 1 in System power-off.

10.3 Low SOC

The self-discharge characteristic of battery pack will cause power loss. If the equipment is not charged for a long time, it may be damaged due to overdischarge of power. When the battery is low, charge the equipment in time. Under normal circumstances, the equipment can charge itself according to the running condition. If the equipment cannot be charged, please contact your sales agent in time and deal with it within the specified time. If the battery capacity is lost or irreversible damage is caused due to the delay, the company will not be liable.

- When the battery power is greater than or equal to 10%, charge within 30 days
- When the battery power is less than or equal to 0% and less than 10%, charge within 7 days

Scenarios that may cause a charge failure (including but not limited to) :

- The PV side has no input, and the power grid side is powered off for a long time.
- The equipment is faulty.
- Parameters are not set correctly.

10.4 The standard charging steps for a battery pack

If a full charge capacity calculation is required for the battery pack, Recommend charging method: Charging the battery with 157A constant current and 42.6V(3.55V/cell) cconstant voltage until the current reduces to 25A at ambient 20°C ±5°C.

10.5 Emergency Treatment

Emergency in case of Fire

Danger

- Please shut down the equipment or disconnect the main power switch when it is safe.
- The high temperature may distort or damage the battery pack, resulting in electrolyte overflow or toxic gas leakage. Do not go near the battery pack and wear protective equipment.
- If the fire is small, use carbon dioxide or ABC dry powder extinguisher to extinguish the fire.
- If the fire is spreading, evacuate the building or equipment area immediately and call the fire department. Re-entry to burning buildings is prohibited.
- Do not touch or come into contact with high voltage components during fire fighting, due to the risk of electric shock.
- After extinguishing the fire, do not use the equipment, please contact your installer.

Emergency in case of Flood

Danger

- Please shut down the equipment or disconnect the main power switch when it is safe.
- If the battery pack is submerged, do not touch it to avoid the danger of electric shock.
- After the flood waters recede, do not use the equipment. Please contact your installer.

Emergency in case of Battery Pack Malfunctions

Danger

- When the battery pack has abnormal odor, electrolyte leakage, or heat, do not touch it, and contact professional personnel immediately. Professionals must wear protective equipment such as goggles, rubber gloves, gas masks, and protective clothing to protect themselves.
- The electrolyte is corrosive and contact may cause skin irritation or chemical burns. In case of accidental contact with the electrolyte, take the following measures immediately:
  - Inhalation: Evacuate the contaminated area, keep fresh air circulating, and seek immediate medical help.
  - Eye contact: Flush eyes with plenty of water for at least 15 minutes. Do not rub eyes. Seek medical help immediately.
  - Skin contact: Wash the contact area with plenty of soapy water and seek medical help immediately.
  - Ingestion: Induce vomiting and seek medical help immediately.
- Do not continue to use abnormal battery packs, please contact your installer.

Emergency in case of Battery Pack Drops or Impacts

- If there is an obvious odor, smoke, or fire, keep away from the equipment immediately and contact professional personnel.
- Do not use the battery pack if it has been dropped or hit. Please contact your installer.

Chapter 11 Inverter and Battery Pack Disposal

11.1 Removing the Inverters

> ⚠ Warning
> Cut off both the DC and AC power supplies before removing the inverters.

Perform the following operation before removing the inverters:

1. Disconnect all electrical connections of the inverters, including the RS485 communication cable, DC input cable, AC output cable, and protection ground (PGND) cable.
2. Remove the inverters from the mounting kit.
3. Remove the mounting kit.

11.2 Scrapping the Inverters

When the inverter and battery pack reaches the end of its useful life, please dispose of it according to the applicable electrical waste disposal regulations in the installation location.

Chapter 12 Appendix

12.1 Technical Parameter

For details about equipment parameters, see the Data sheets of the product.