SigenStack Energy Storage System Installation Guide



Version: Draft B
Release Date: 2025-04-18



Caution

- Only trained or qualified persons with electrical engineering knowledge can work directly on the equipment.
- Operators should be familiar with national and local laws, regulations, and standards, and the compositions and operating principles of relevant systems.
- Before operations, please carefully read operating requirements and precautions in this document and User Manual. Any equipment damage caused by improper operation will not be covered under warranty.

1 Introduction

1.1 Appearance and Dimensions

No.	Model	Description	Abbreviated Form
1	SigenStack BC M2-1C-BST	Battery controller (including DC-DC boost converter module).	BC-BST
	SigenStack BC M2-0.5C-BST		
	SigenStack BC M2-0.5C	Battery controller.	BC
2	SigenStack BAT 12.0	Energy storage battery.	BAT
3	SigenStack Base MAIN-0.5C	Main base, for the Main stack containing the battery controller.	Base MAIN
	SigenStack Base MAIN-1C		
	SigenStack Base SUB-0.5C	Sub-base, for the Sub stack containing the energy storage battery top cover.	Base SUB
	SigenStack Base SUB-1C		
4	SigenStack Base 4S-0.5C	Quadruple base, including one main base and three sub-bases.	Base 4S
5	SigenStack Cover	Energy storage battery top cover, for the Sub stack containing the sub-base.	Cover

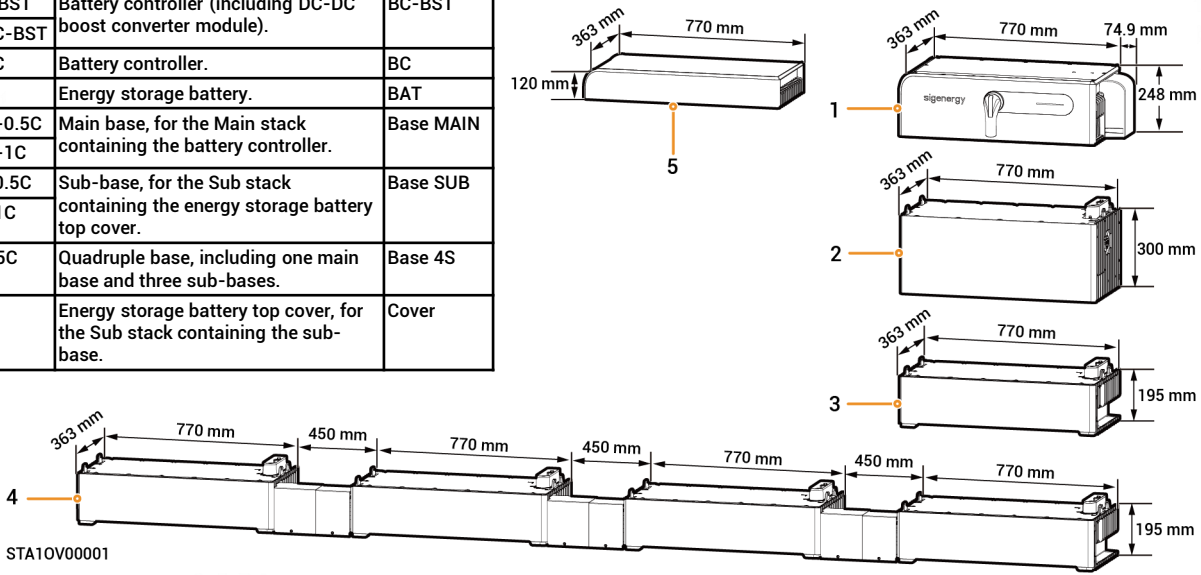

1.2 Configuration

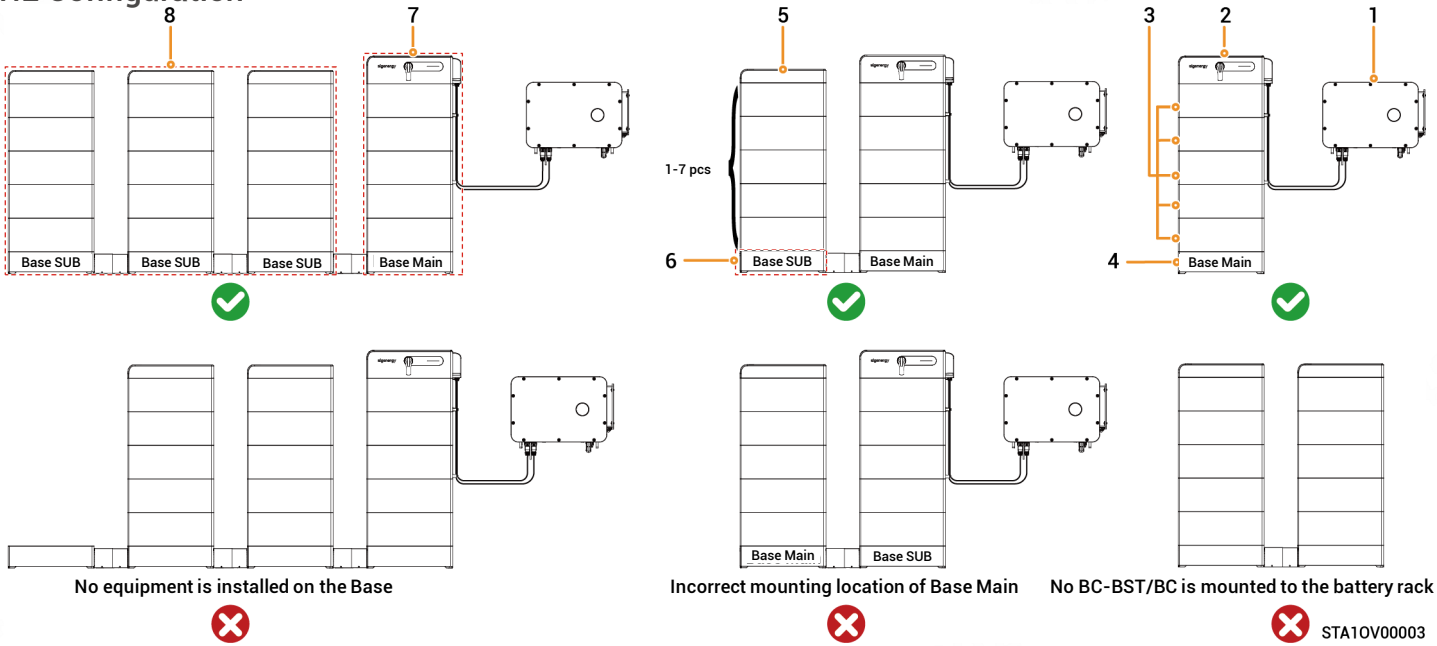

The SigenStack energy storage system cannot currently be integrated with our company's SigenStor series devices. If you have any questions, please contact our technical staff.

No.	Description	No.	Model
1	Sigen inverter	Sigen C&I series inverter	
7	Main Stack	2	SigenStack BC M2-0.5C/0.5C-BST/1C-BST
		3	SigenStack BAT 12.0
		4	SigenStack Base MAIN-0.5C/1C
8	Sub Stack	5	SigenStack Cover
		3	SigenStack BAT 12.0
		6	SigenStack Base SUB-0.5C/1C

Tips

- 4 to 21 batteries can be connected to each inverter.
- 1 to 7 batteries can be mounted onto both Main Stack and Sub Stack.
- Base MAIN works with BC-BST or BC, and Base SUB works with Cover.
- Scenarios for using BC-BST in energy storage systems:
  - The rated line voltage on the AC side is greater than 400 V
  - Applicable to PV storage system wiring
  - Applicable to pure storage system wiring, connected to Sigen PV HYA series inverter and BAT ≤ 19 in the energy storage system
  - Applicable to pure storage system wiring, connected to Sigen PV HYB series inverter
- Scenarios for using BC in energy storage systems:
  - Applicable to pure storage system wiring, connected to Sigen PV HYA series inverter and BAT ≥ 20 in the energy storage system

1.3 Introduction to Ports and Switch

SigenStack BC M2-0.5C/0.5C-BST/1C-BST

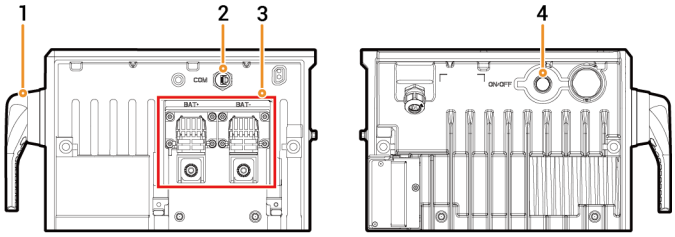

STA1OV00003

No.	Description	Marking
1	Disconnecting switch	-
2	Communication port	COM
3	Power port	BAT+/BAT-
4	Power button	ON/OFF

2 Inspections Before Installation

- Check whether the components are entirely supplied against the packing list and whether the appearance is in good condition. For any problem, contact your sales representative.
- Parts and accessories supplied with the packing box are personal assets of the owner and must not be taken away from the installation site.
- Check and ensure the completeness of personal protective equipment and installation tools; replenish if necessary.
- Check and ensure the correctness of quantity and specifications of the installer-provided cables; re-prepare if necessary.

Personal Protective Equipment


Safety hat


Goggles


Dust mask


Protective gloves


Insulating gloves


Insulating shoes


Safety vest

Installation Tools

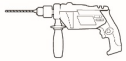
Power drill


Vacuum cleaner

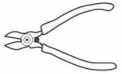
Wire cutter

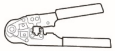
Crimp tool


Crimping pliers


Wire stripper


Scissors


Cable ties


Heat shrinkable sleeve

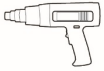
Heat gun

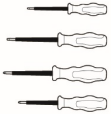
Insulated screwdriver set


Digital torque socket wrench


Marker


Rubber mallet


Level


Tape measure


Forklift


Stainless steel plastic-covered wire rope

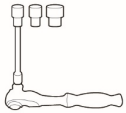
Insulated socket wrench

Installer-provided Cables

No.	Cable Name	Recommended Specification
1	Base MAIN PE cable	Outdoor single-core copper cable Cross-sectional area of cable: ≥ 25 mm^2
2	Power cable between inverter and BC-BST/BC	Outdoor single-core copper cable Rated voltage: 1500 Vd.c. Cross-sectional area of cable: 50 mm^2 to 70 mm^2 Cable OD: 11 mm to 22 mm Single cable length: ≤ 25 m
3	Signal cable between inverter and BC-BST/BC	Outdoor shielded twisted pair (8 cores), EIA/TIA 568B standard network cable Cross-sectional area of conductor: 0.13 mm^2 to 0.2 mm^2 Cable OD: 4 mm to 7.5 mm Single cable length: ≤ 25 m[1]

Note [1]: The cable length should be limited for good communication. Too long cable degrades the communication effect.

3 Site Requirements

Tips

- Before installing the equipment, please be sure to carefully read the following installation requirements. The company will not be liable for any functional abnormalities or damages arising from the operation of the equipment if the installation requirements are not followed, even in cases leading to personal safety incidents.
- Prior to your installation, select the mounting location in strict accordance with your local building, fire protection, environmental protection regulations and specifications, including but not limited to GB 51048 Design Code for Electrochemical Energy Storage Station, GB 50016 Code for Fire Protection Design of Buildings, and NFPA 855 Standard for the Installation of Stationary Energy Storage Systems. The final planning of the mounting location should be determined by the installer or EPC (Engineering, Procurement, Construction).

Installation Environment

- Do not install the equipment in a smoky, flammable, or explosive environment.
- Do not install the equipment in an environment with conductive metal dust or magnetic dust.
- Do not install the equipment in an environment that is prone to mold and fungi.
- Do not install the equipment in an environment with strong electromagnetic interference.
- The temperature and humidity of the installation environment should meet equipment requirements.
- The equipment should be installed in an area that is at least 500 m away from corrosion sources that may result in salt or acid damage (corrosion sources include but are not limited to seaside, thermal power plants, chemical plants, smelters, coal plants, rubber plants, and electroplating plants).

Installation Location

- Do not tilt the equipment or place it upside down. Ensure that the equipment is horizontally installed.
- Do not install the equipment in a place with fire hazards or is prone to moisturizing.
- Do not install the equipment in a sealed, poorly ventilated location without fire protection measures and difficult access for firefighters.
- Do not install the equipment under water sources, including but not limited to water pipes and air conditioner outlet windows, where condensate or water leakage may occur. Otherwise, liquid may enter the equipment and cause short circuit.
- Do not install the equipment in mobile scenarios such as RVS, cruise ships, and trains.
- The equipment is hot when it is operating. Please ensure that the installation environment is well ventilated and avoid significant ambient temperature rise by more than 5°C while the equipment is operating. Otherwise, the equipment will be derated.
- The equipment generates heat when it is operating. Do not install the equipment in areas easily accessible to heat dissipation surfaces.
- You are advised to install the equipment in a location where you can easily access, install, operate, maintain it, and view the indicator status.

Installation Base

- The equipment must be installed on concrete or other non-combustible surfaces, and the mounting location must be level, solid, and flat and feature sufficient load-bearing capacity.
- The equipment foundation should be prepared according to the total weight of the equipment. Recheck the foundation design if the load-bearing capacity is insufficient.
- The equipment foundation can be drilled for the installation of expansion bolts.
- Ensure that the height of the equipment base is above the highest recorded water level in the area and at least 200 mm above ground level, and avoid installing the equipment in low-lying areas prone to waterlogging.
- The foundation should not have a contact surface level error of greater than 3 mm with the equipment. Avoid local stress that may lead to instability.

Installation Base

- The installation base should be flat, and the installation area should meet the installation space requirements.
- No plumbing or electrical alignments should be inside the installation base to avoid potential drilling hazards during equipment installation.
- The equipment base is made of aluminum. If the equipment is installed on a metallic substrate that is prone to electrochemical corrosion (such as high-chromium stainless steel, austenitic stainless steel, and nickel-plated steel), insulating gaskets must be fully installed between the equipment and the substrate. (Non-metallic insulating gaskets such as PC, PTFE, or PVDF can be used)

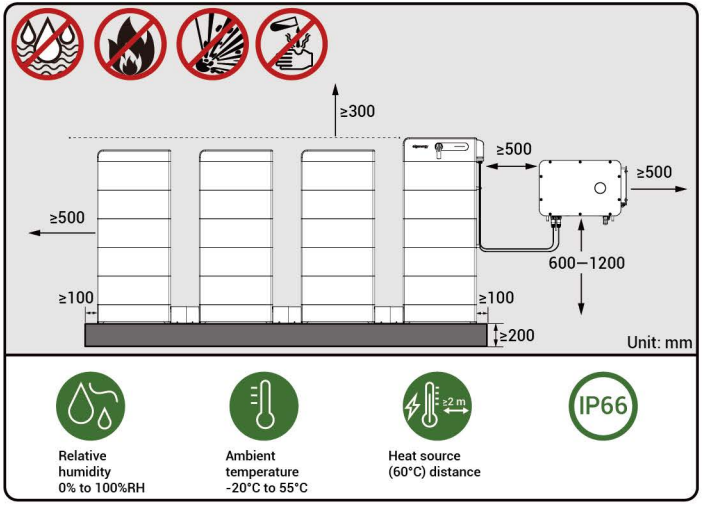

STA1SF00001

Mounting Space (top view)

In this scenario, select a wall that meets the requirements based on the fire resistance rating defined by local codes.

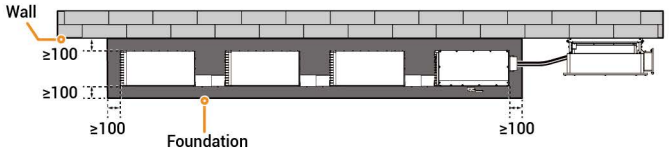

In this scenario, when the inverter is installed with its back against the battery stack and the inverter installation height is lower than the battery stack, a metal partition needs to be added when installing the inverter to avoid derating due to heat transfer between the inverter and BAT during operation. The metal separator must meet load-bearing requirements.

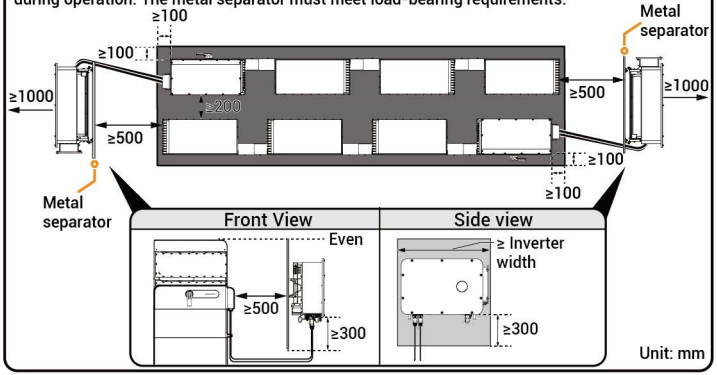

Tips

After installation, please ensure that there is no water accumulation at the bottom of the device, and add drainage channels if necessary.

4 Installation

Caution

- The equipment is heavy. Handle the equipment with due care to avoid falling or injuring the operator.
- During the installation process, avoid rain, snow, wind, sand, and other foreign objects from entering the device port.

4.1 Base placement

- Refer to the description on the marking template to locate the punching points and drill the holes.
- When installing multiple bases, it is necessary to splice the marking template before locating and hold drilling.Please use the corresponding marking template according to the base spacing (L).

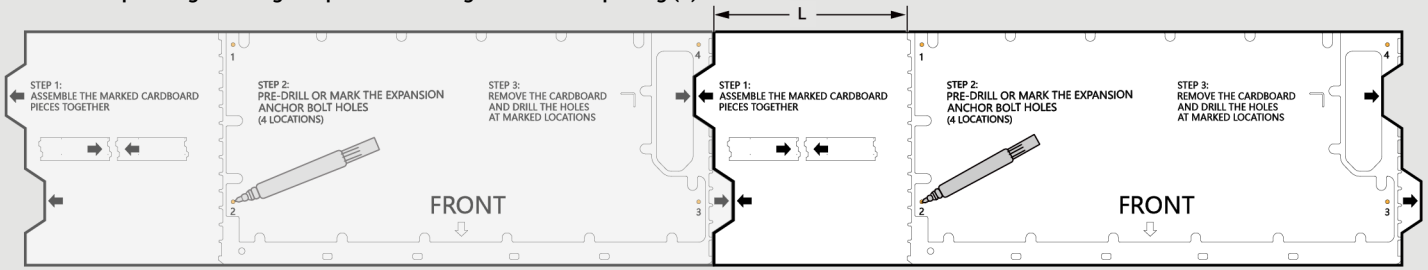

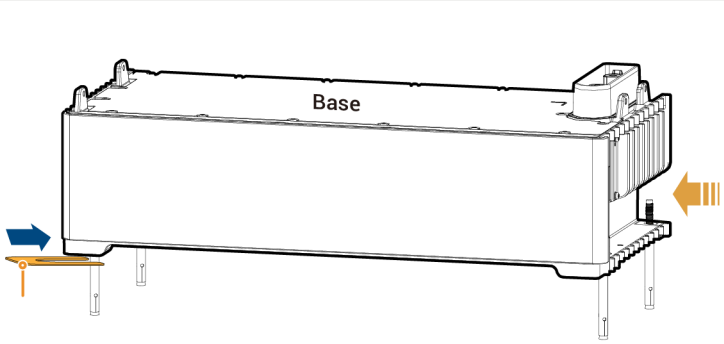

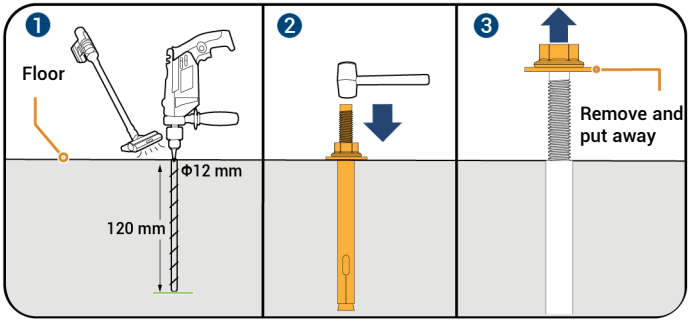

STA1IN00023

- If you purchased the Base 4S, please move the base with multiple people to the mounting location.
- If there is a gap between the base and the plane after placement, a shim provided with the box can be placed in the gap.

4.2 Base wiring

4.2.1 Without Sub stack

1

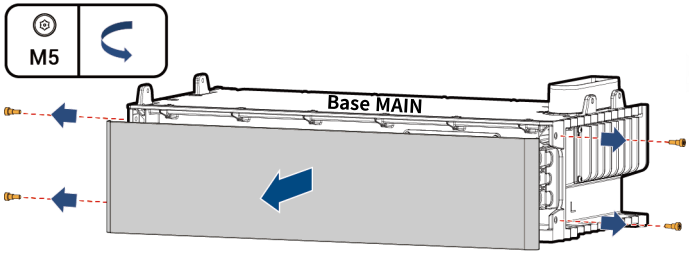

STA1IN00014

2

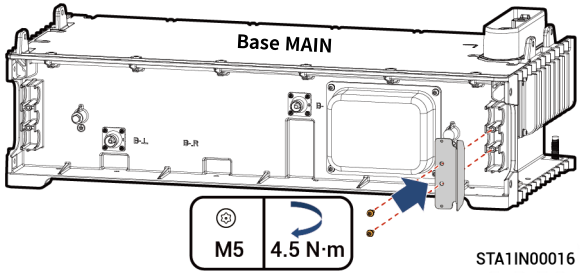

STA1IN00016

3

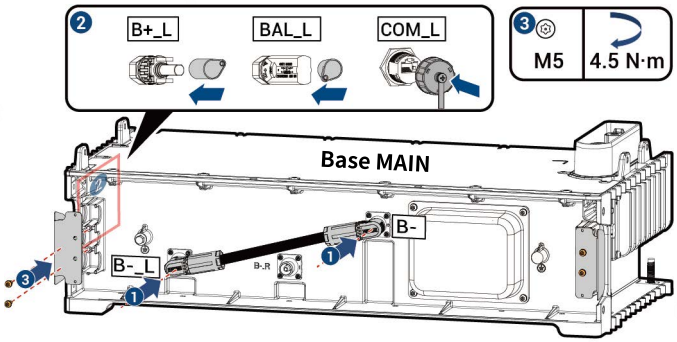

STA1IN00021

4

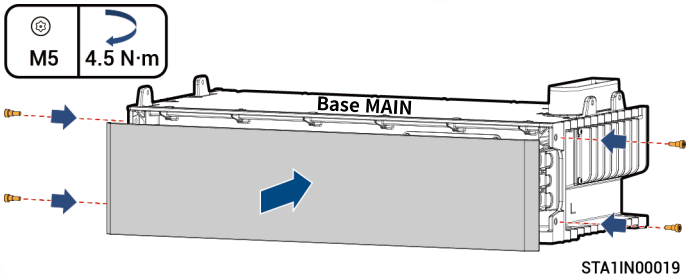

STA1IN00019

4.2.1 With Sub stack

If you purchased the Base 4S, please ignore this section.

1

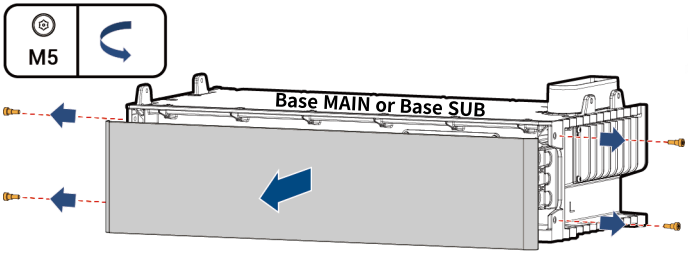

STA1IN00014

2

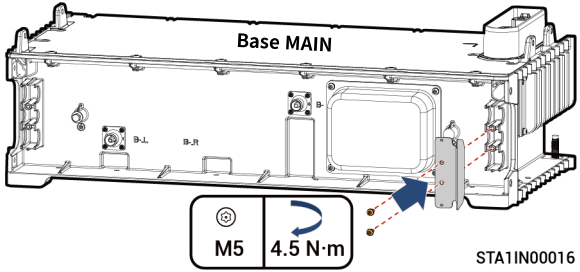

STA1IN00016

3

Example of the docking relationship

Cables are supplied with the packing box.

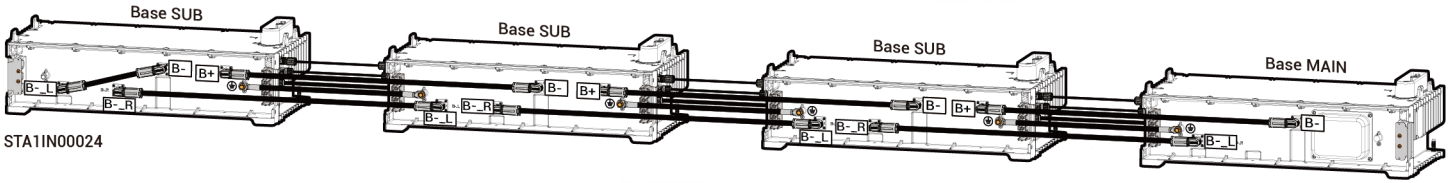

STA1IN00024

Port Description

Marking	Description	Marking	Description	Marking	Description	Marking	Description
B+	Battery stack Positive Connection port	B-_R	Bus- right Connection port	B+_R	Auxiliary power supply Bus+ right Connection port	B+_L	Port on the left of the positive bus of the auxiliary power supply
B-	Battery stack Negative Connection port	⏚	PE point	BAL_R	Battery Balancing right Connection port	BAL_L	Battery Balancing left Connection port
B-_L	Bus- left Connection port	-	-	COM_R	Communication port on the right of the battery	COM_L	Communication port on the left of the battery

Connection

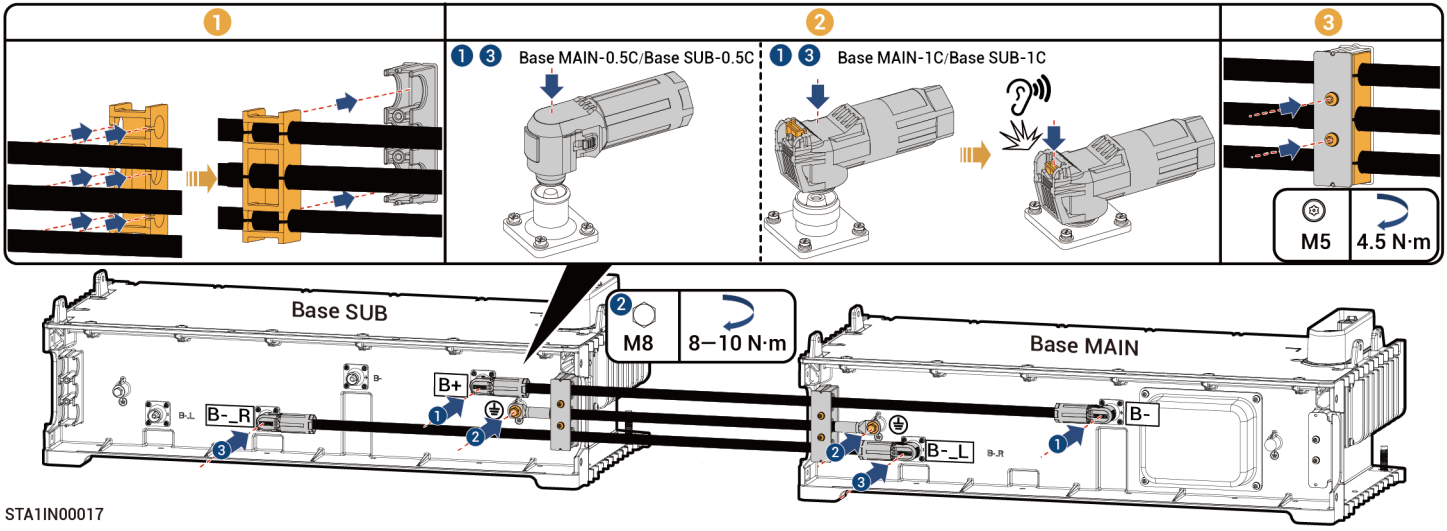

STA1IN00017

Connection between Base SUB and Base SUB		Connection between Base SUB and Base MAIN	
Base SUB	Base SUB		Base MAIN
B+	B-	B+	B-
⏚	⏚	⏚	⏚
B-_R	B-_L	B-_R	B-_L

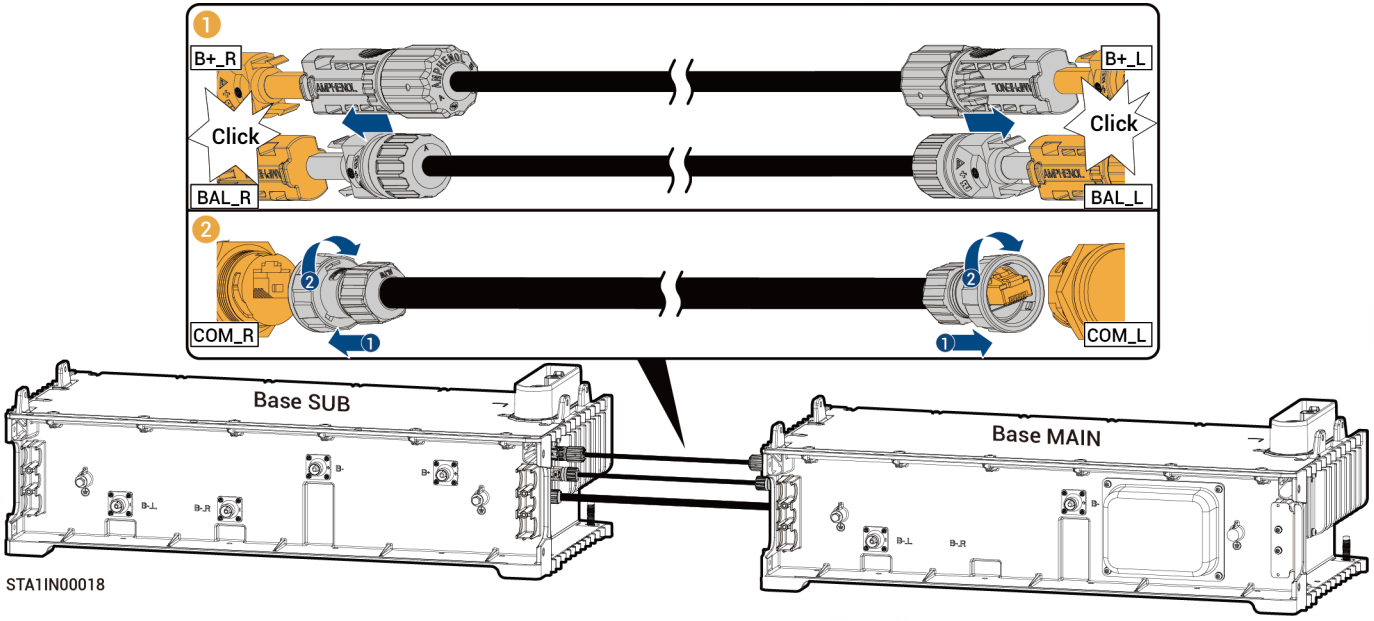

Connection between Base SUB and Base SUB		Connection between Base SUB and Base MAIN	
Base SUB	Base SUB		Base MAIN
B+_R	B+_L	B+_R	B+_L
BAL_R	BAL_L	BAL_R	BAL_L
COM_R	COM_L	COM_R	COM_L

For multiple Sub stacks, repeat the steps 1 3 o complete the cable connection between Base SUBs.
The Base SUB on the far left should be short-connected, and unused ports should be plugged.

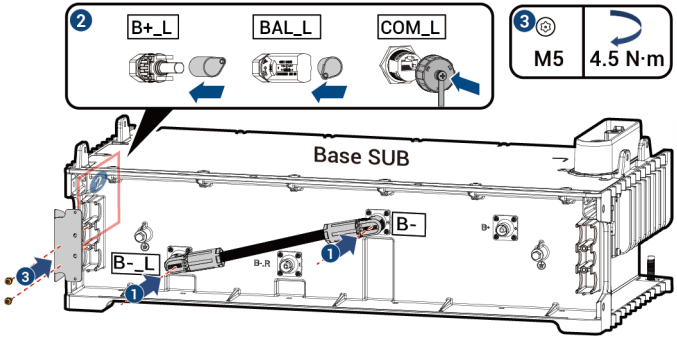

STA1IN00021

4

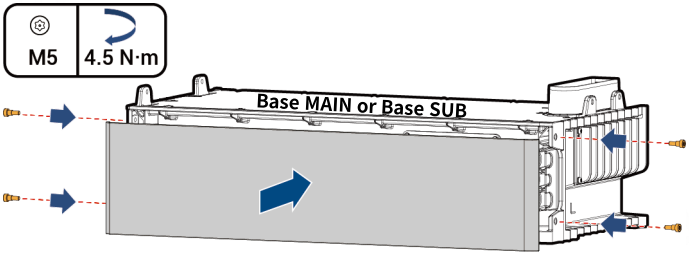

STA1IN00019

4.3 Fixed base

1 If there is no sub stack, ignore Step ①.

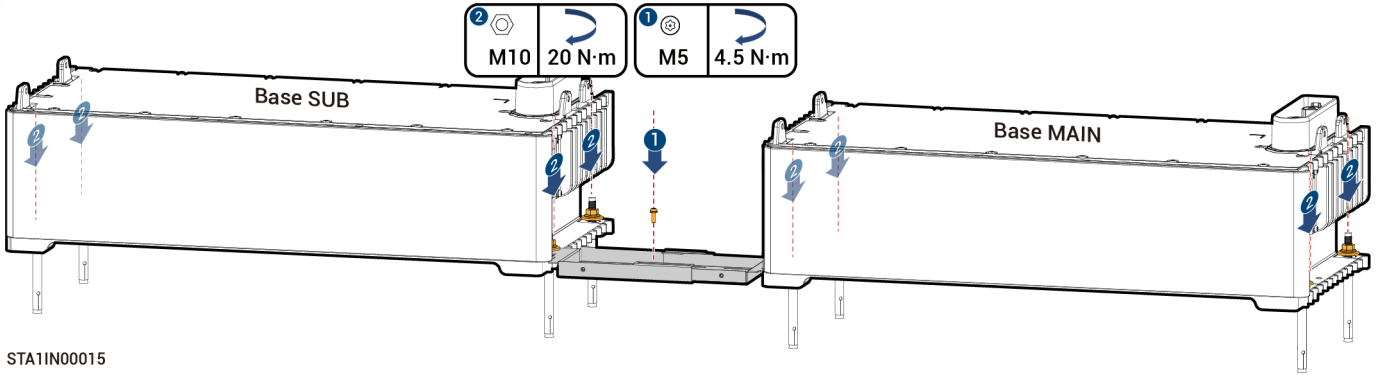

STA1IN00015

2 If there is no sub stack, please ignore this step.

Before this step, you may choose to tie the cables as needed.

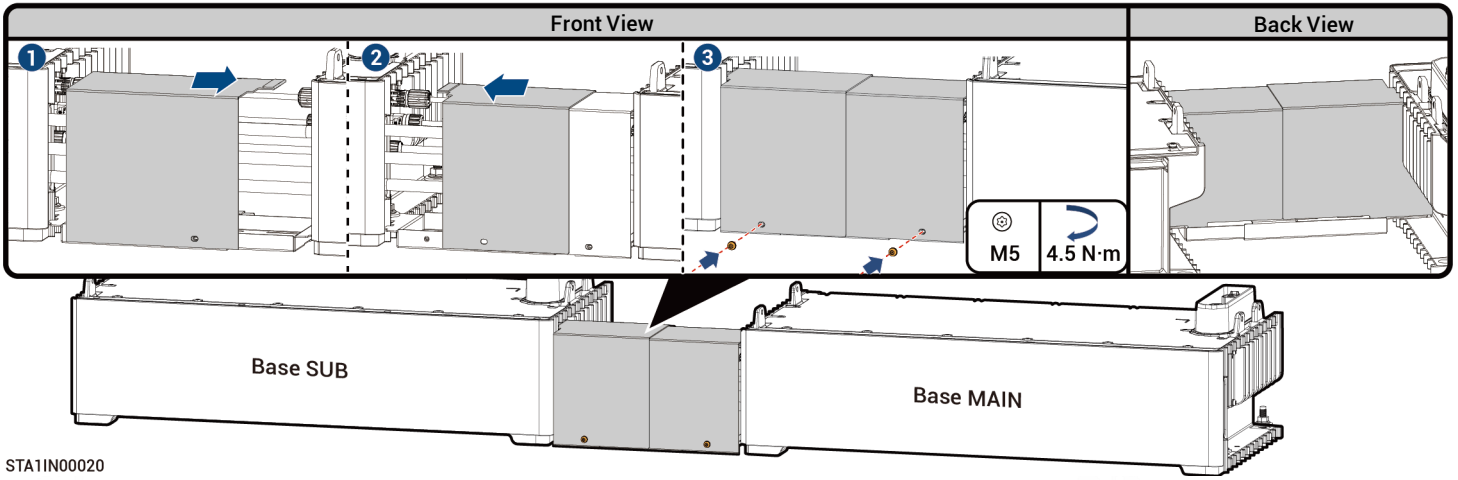

STA1IN00020

4.3 Installing BAT, Cover, and BC-BST/BC

Caution

- The equipment is heavy. Please handle the equipment with due care to avoid sprains, crushing, or other injuries.
- Do not use a battery that fell off. Please buy a new one.
- Do not drag the equipment during installation.
- Check that the handles of the BAT are securely attached before lifting.

1 After the handles are attached to the BAT, keep the BAT level and install it vertically down.

Tips

Before stacking, remove the protective cover on the blind-mate connectors.

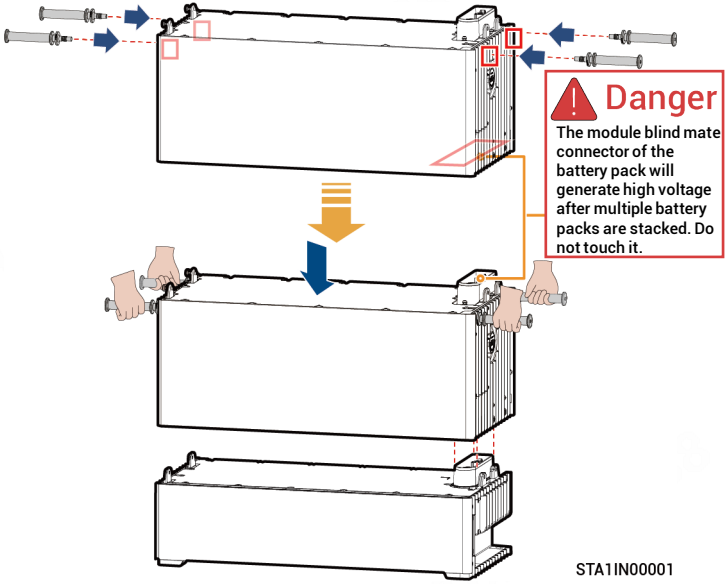

STA1IN00001

2 Repeat the step 1 or the 2nd, 3rd BAT.

3 When installing fourth or more BATs, please use a lifting tool.

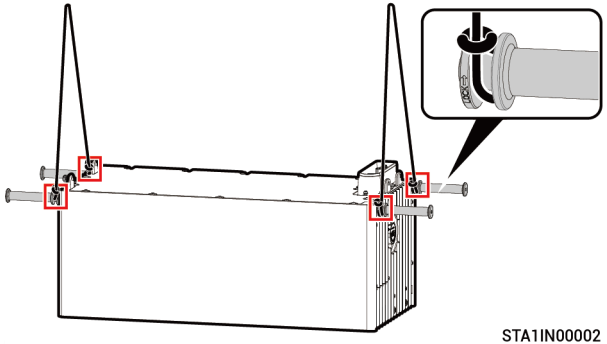

STA1IN00002

Tips

- Please prepare a lifting plan according to the actual situation and use a lifting rope that meets the load-bearing requirements. When lifting, please ensure that the equipment is secured tightly without the risk of falling.
- When lifting, wrap a protective layer around the area where the lifting rope comes into contact with the equipment to avoid damage to the equipment.

4 Please install the Cover before installing the top BAT to the Sub stack.

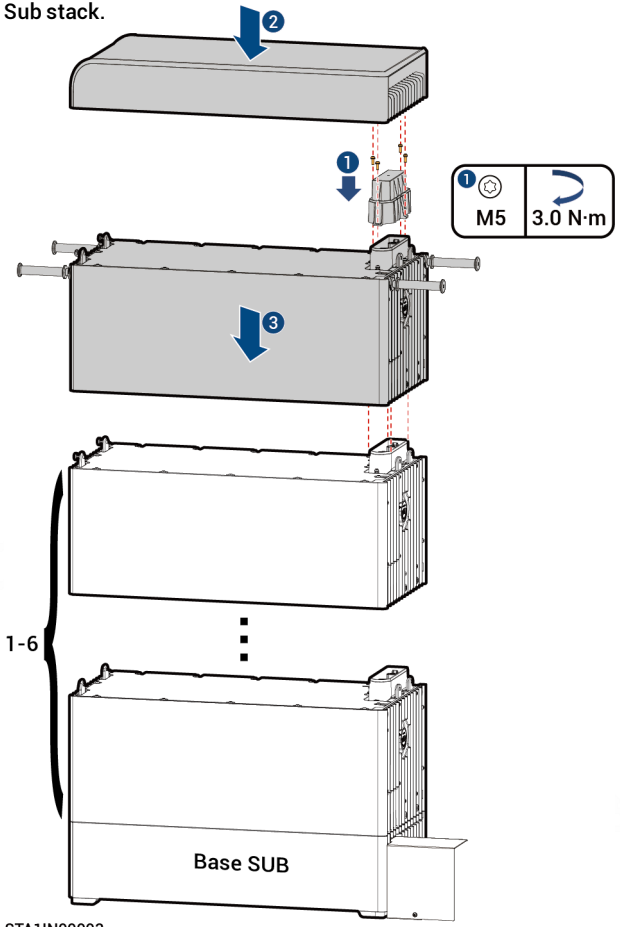

STA1IN00003

5 Install BC-BST/BC to the Main stack.

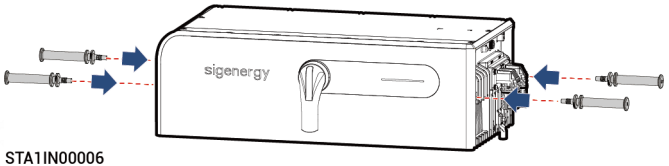

STA1IN00006

Installed BATs ≤ 3

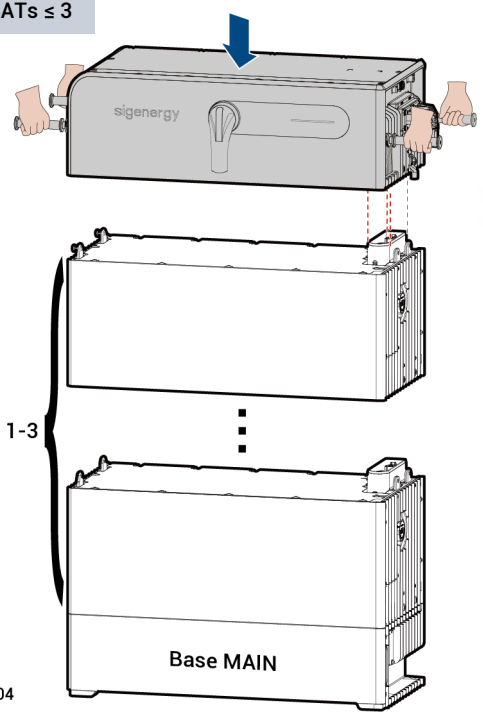

STA1IN00004

4 ≤ Installed BATs ≤ 7

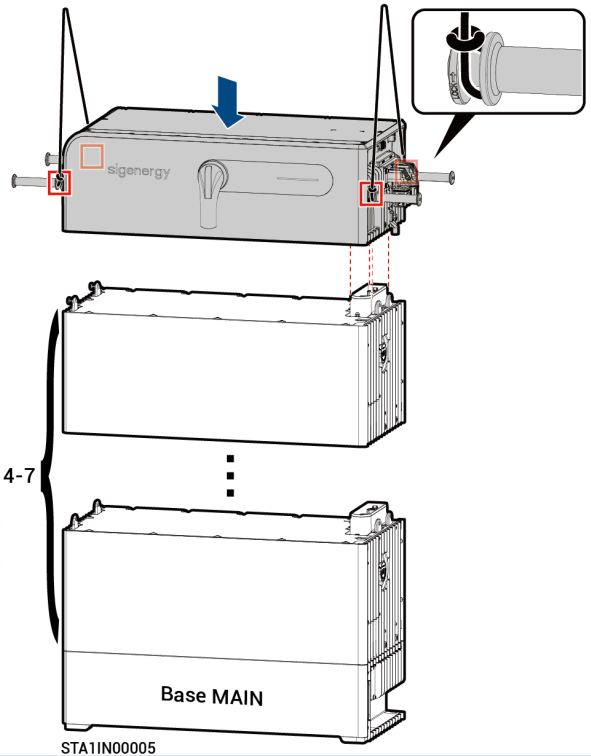

STA1IN00005

Tips

- Please prepare a lifting plan according to the actual situation and use a lifting rope that meets the load-bearing requirements. When lifting, please ensure that the equipment is secured tightly without the risk of falling.
- When lifting, wrap a protective layer around the area where the lifting rope comes into contact with the equipment to avoid damage to the equipment.

6 Secure the battery rack.

Main stack

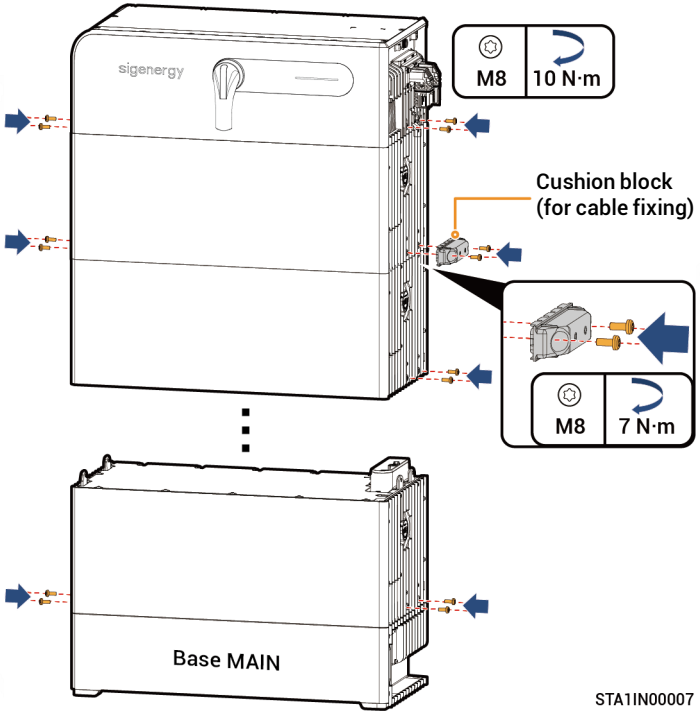

STA1IN00007

Tips

- (Optional) To fix the cable between BC-BST/BC and the inverter, you can choose to install cushion blocks.
- When tighenting screws, the equipment can be fine-tuned as needed to align its front for an aesthetic look.

Sub stack

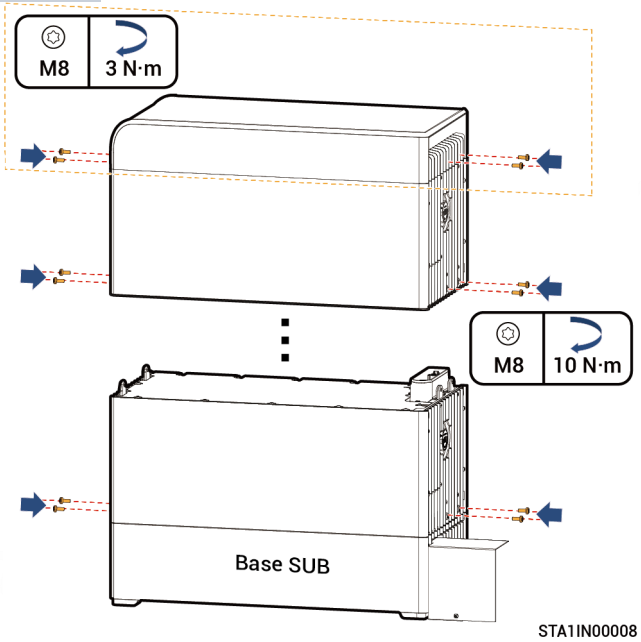

STA1IN00008

Tips

When tighenting screws, the equipment can be fine-tuned as needed to align its front for an aesthetic look.

Plug installation

At the location where the device handle is installed, after removing the handle, please use the plug provided with the box to seal the handle.

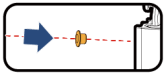

5 Cable Connection

Tips

After the cables are connected, take protective measures to avoid them from being soaked by rain or snow or being eaten by animals.

5.1 Base MAIN PE Cable

The PE cable is grounded nearby or connected to the PE point of the inverter.

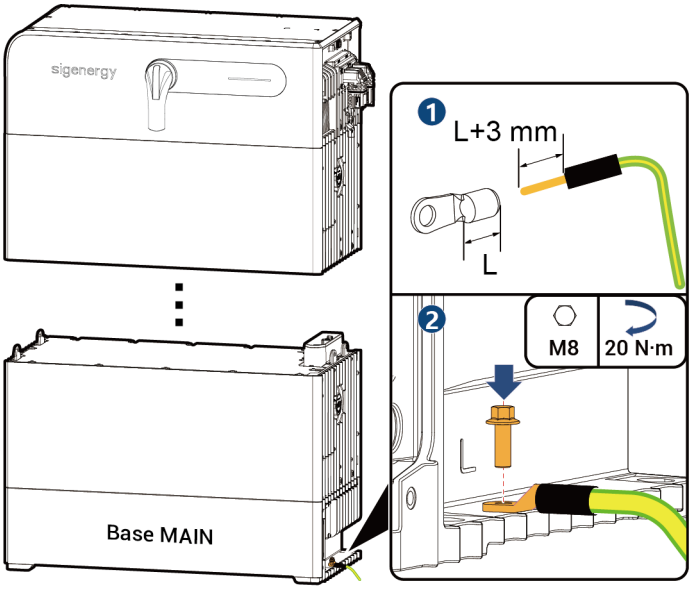

STA1IN00013

5.2 BC-BST/BC Power Cable

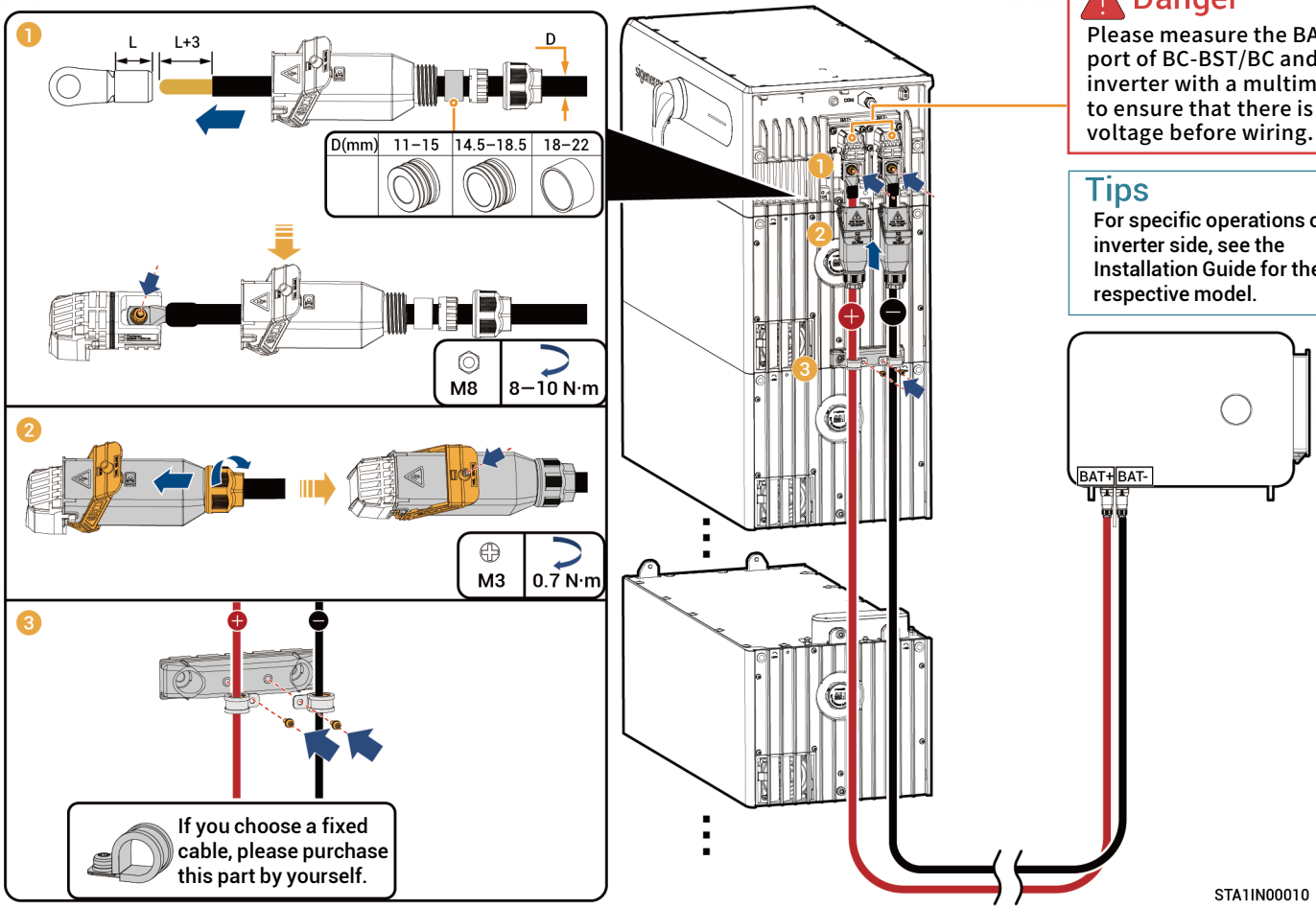

Danger

Please measure the BAT port of BC-BST/BC and the inverter with a multimeter to ensure that there is no voltage before wiring.

Tips

For specific operations on the inverter side, see the Installation Guide for the respective model.

5.3 BC-BST/BC Signal Cable

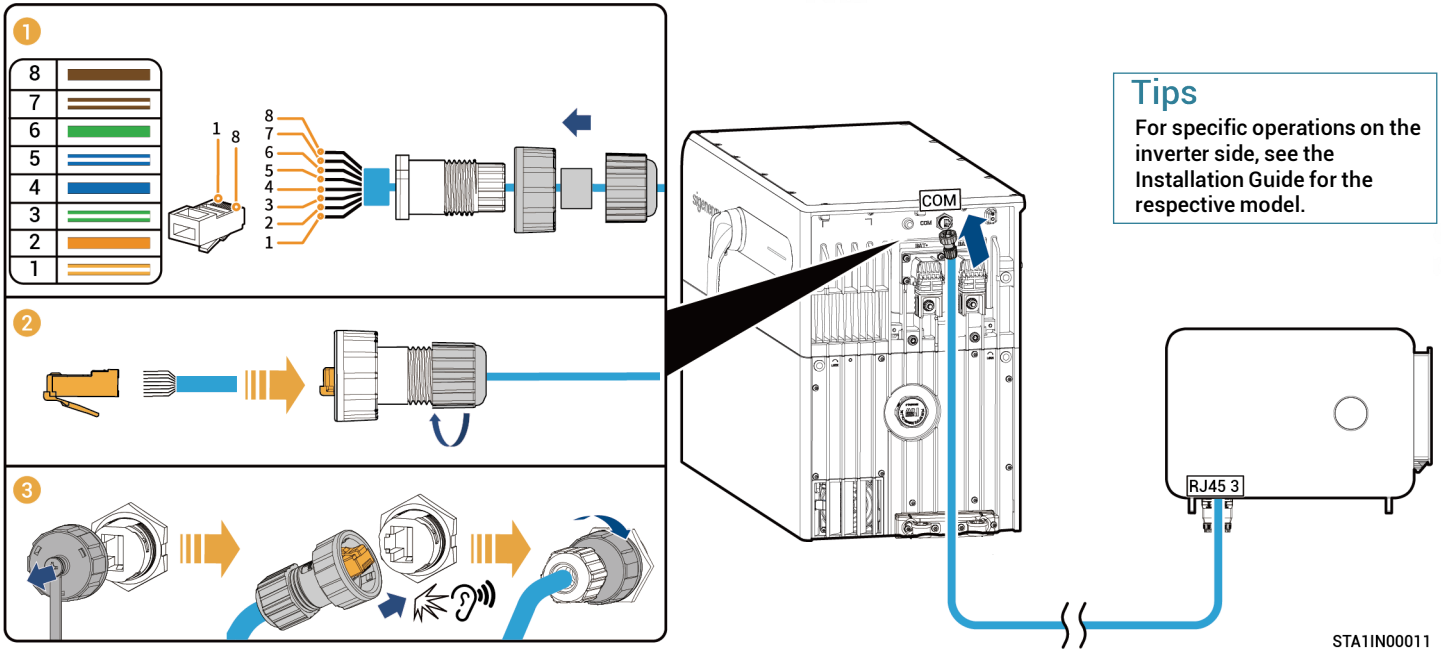

Tips

For specific operations on the inverter side, see the Installation Guide for the respective model.

6 Inspections After Installation

No.	Check Item
1	The equipment is securely installed.
2	PE cable, power cable, and signal cable are installed properly without omission.
3	Lock screws or connectors are installed in place without any looseness.
4	Cutouts of cable ties are free of burr or sharp edges.
5	The disconnecting switch is in the OFF position.
6	Unused ports are protected with water-proof covers or plugs.
7	No construction residue inside and outside the equipment.

After checking that everything is OK, install the protective cover for the BC-BST/BC.

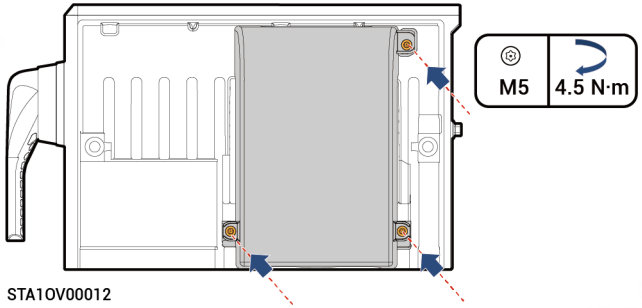

STA1OV00012

7 Power-on

1. Place the BC/BC-BST disconnecting switch in the ON position.
2. Power on the inverter by referring to the Installation Guide for the respective model.
3. Check the indicator status of the BC/BC-BST.

Tips

The indicator correctly indicates the real-time power and status of the battery rack.

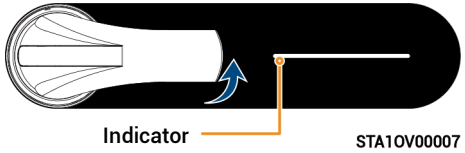

STA1OV00007

Color	Status	Meaning
	-	The energy storage system is dormant.
	Steady on	The energy storage system is in thermal standby mode.
	Breathing blink	Charging.
	Breathing blink	Discharging.
	Steady on	The battery stack communicates abnormally with the inverter.
	Breathing blink	Communication error between BAT and BC/BC-BST.
	Steady on	Equipment failure.

8 Creating a New System

1 Please visit https://www.sigenergy.com and go to "Partner" →"Register Now" and sign up for your account.

2 Download the mySigen app to initiate the creation of a new system for your equipment.

App Store

Google Play

mySigen

mySigen

Creating a New System with an inverter

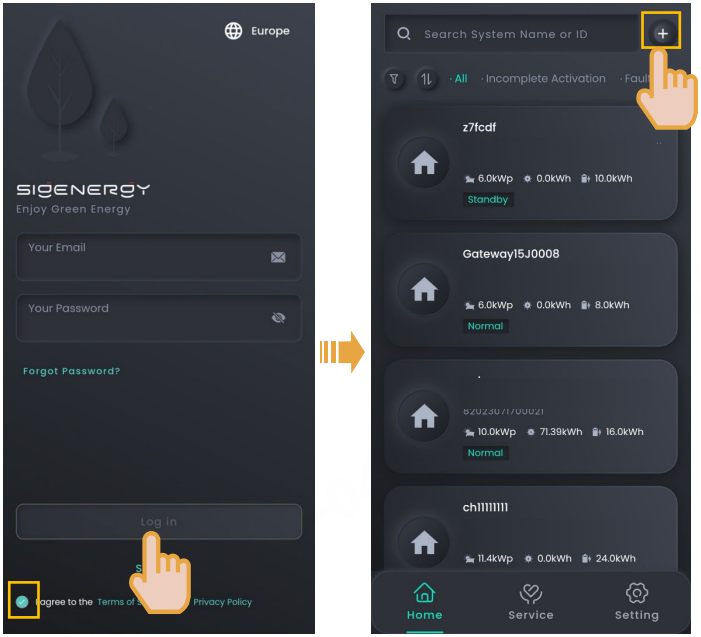

- Create a new system as instructed on the screen.
- For the procedure, see Installation Guide for the respective inverter.

Adding to Existing Power Stations

Please complete the following steps to confirm the addition of SigenStack.

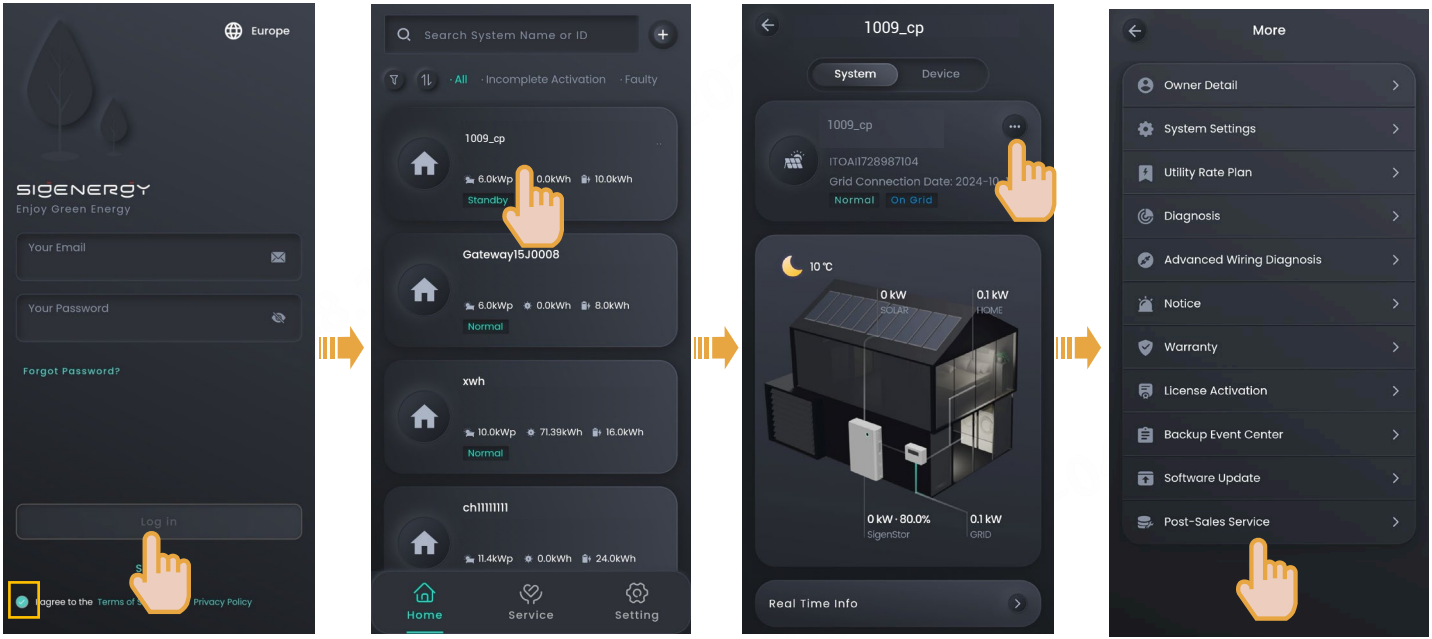

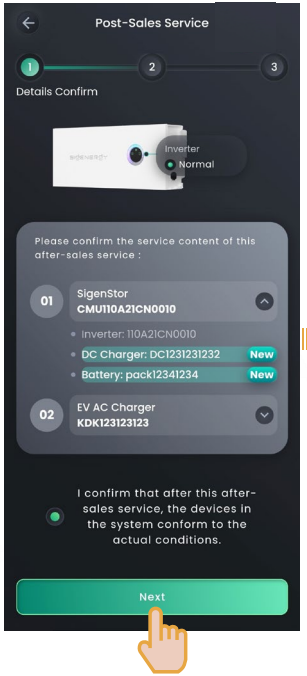

Complete the confirmation process as instructed on the screen.

Sigenergy Technology Co., Ltd.

Website	LinkedIn	YouTube

www.sigenergy.com

Copyright © 2025 Sigenergy Technology Co., Ltd. All rights reserved.

The information provided in this document is for reference only. The information in the document is legally collected and maintained as reliable, accurate, and complete as possible, but the accuracy or completeness of the information described in the document is not guaranteed. This document cannot be used as a basis or evidence for morality, responsibility, or legality. Sigenergy Technology Co., Ltd. will supplement, correct, and revise the relevant information at any time, but will not provide any forms of guarantee on its timely release. Sigenergy assumes no responsibility for the information provided in this document or for any direct or indirect effects or consequences arising therefrom. The document is proprietary to Sigenergy Technology Co., Ltd. and shall not be reproduced, copied, or published in any form by any organization or individual without prior written permission. Sigenergy Technology Co., Ltd. has the right to modify and interpret the terms of this disclaimer.