DTSU666 Smart Power Sensor
for C&I

Quick installation Guide



Please scan the QR code to obtain the electronic version of the quick installation guide and instructions

Add: Wenzhou Daqiao Industrial Park,Yueqing City, Zhejiang Province, China
Tel.: 0086-577-62877777
Fax: 0086-577-62891577
Web: aiot.chint.com

Requirement for C&I Power Sensor

System Networking

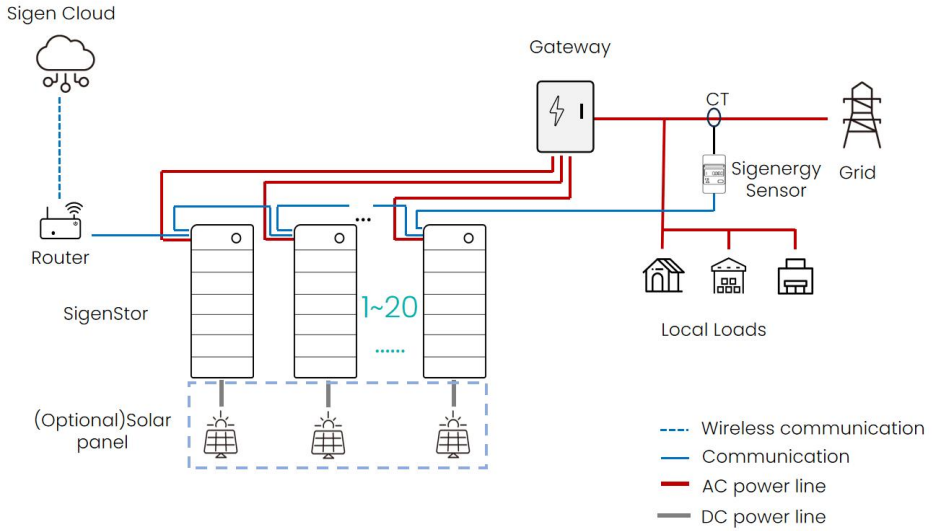

1. For the installation location and wiring of the power sensor, please refer to networking diagram and the wiring guide, or consult our engineer.
2. For voltage sampling, if the grid L-L voltage is ≤480V, you can connect the wires directly; if it is >480V, you need to connect PT
3. C&I power sensor do not include CT and PT, which needs to be purchased separately with the following requirements:

CT	Primary rated current I_n/A	≥Measuring current
	Secondary rated current I_o/A	5A or 1A
	Accuracy	≥0.5
	The default CT ratio of the power sensor	Default 200, need to be reset according to the CT ratio
PT	Primary rated voltage/V	≥Measuring voltage
	Secondary rated voltage/V	3×57.7V(3P4W), 3×100V(3P3W)
	Secondary output capacity/VA	≤20
	Accuracy	≥0.5%
	The default PT ratio of the power sensor	Default 1, need to be reset according to the PT ratio
	Wiring type	3P4W：PT with Y-Y wiring 3P3W：PT with V-V wiring

Sampling Voltage ≤ 480Vac (3P4W)

Wiring Guide

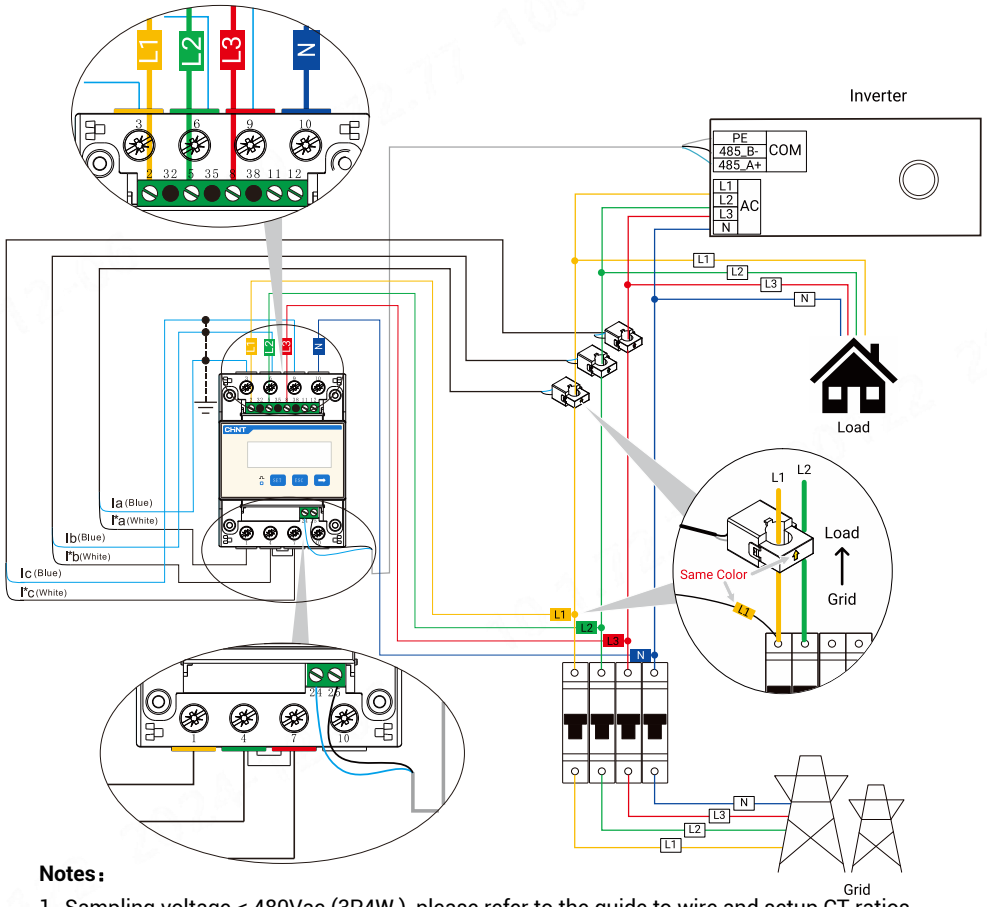

Notes：

1. Sampling voltage ≤ 480Vac (3P4W), please refer to the guide to wire and setup CT ratios.
2. Please ensure that the CT wiring is correct, and ensure that the voltage sampling and CT wiring on different phase lines (regardless of phase sequence) meet the corresponding relationship in the table below.

Voltage sampling and CT port wiring table				
	L1 (CT1)	L2 (CT2)	L3 (CT3)	N
Voltage sampling	2	5	8	10
CT+ (I*a/I*b/I*c)	1	4	7	
CT- (Ia/Ib/Ic)	3	6	9	

3. Make sure the direction of the arrow on CT points from grid to load.
4. Power sensor requires circuit breaker for protection, otherwise the voltage sampling wires need to be connected with a fuse in each phase . Recommended fuse specification: ≥measuring voltage/1A

CT Ratio Setup Guide

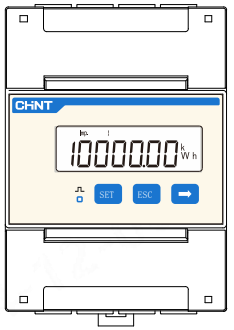

1. Initial interface after power on

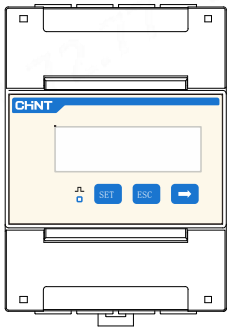

2. Press 'SET' for 3s to enter the password input interface

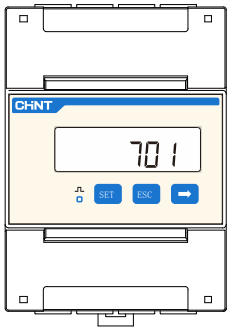

3. Press 'SET' and '➡' to enter the password (default 701)

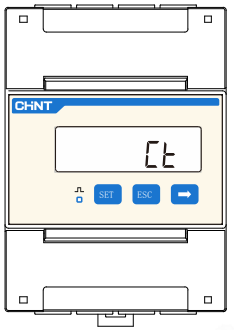

4. Press 'SET' for 3s to enter the setting interface

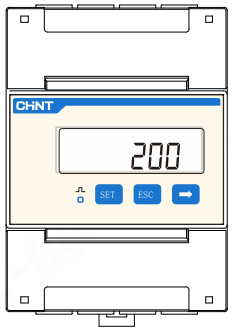

5.Press 'SET' to enter CT set, the default CT is 200

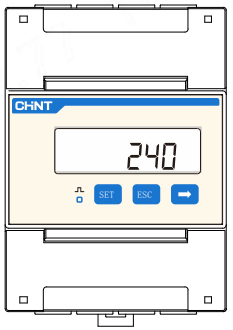

6.Press 'SET' and '➡' to change CT value

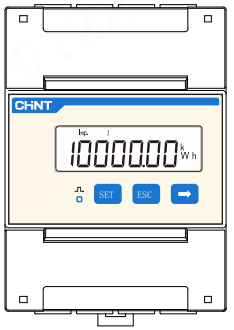

7. Press 'ESC' to save value and quit CT set, press 'ESC' again to back to initial interface

Sampling Voltage ≤ 480Vac (3P3W)

Wiring Guide

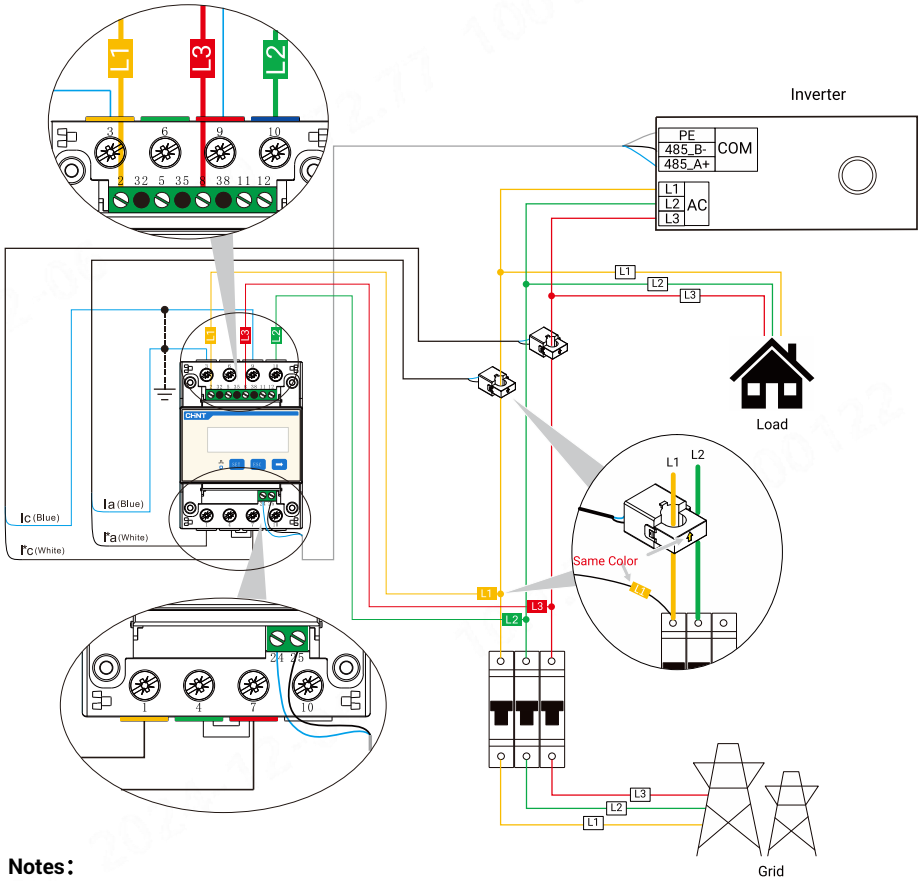

Notes:

1. Sampling voltage ≤ 480Vac (3P3W), please refer to the guide to wire, setup the wiring mode and CT ratio
2. Please ensure that the CT wiring is correct, and ensure that the voltage sampling and CT wiring on different phase lines (regardless of phase sequence) meet the corresponding relationship in the table below.

Voltage sampling and CT port wiring table			
	L1 (CT1)	L2	L3 (CT2)
Voltage sampling	2	10	8
CT+ (I*a/I*b/I*c)	1		7
CT- (Ia/Ib/Ic)	3		9

3. Make sure the direction of the arrow on CT point from grid to load.
4. Power sensor requires circuit breaker for protection, otherwise the voltage sampling wires need to be connected with a fuse in each phase . Recommended fuse specification: ≥measuring voltage/1A

3P3W net Setup Guide

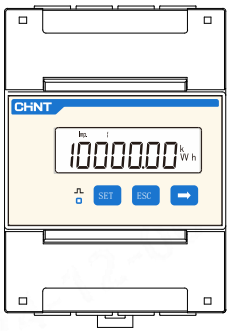

1. Initial interface after power on

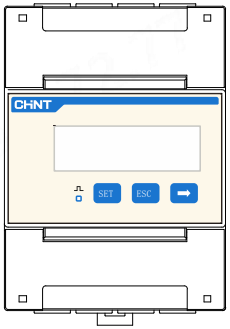

2. Press 'SET' for 3s to enter the password input interface

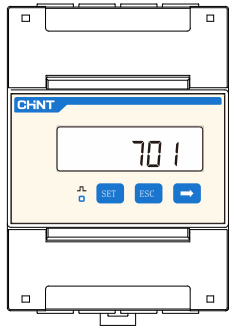

3. Press 'SET' and '➡' to enter the password (default 701)

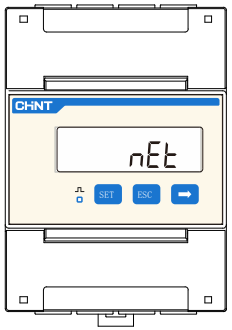

4. Press 'SET' for 3s to enter the setting interface

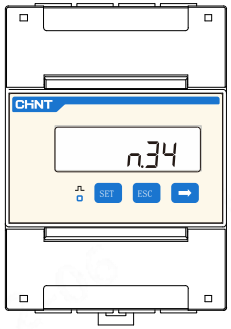

5. Press 'SET' to enter nEt set, the default is n.34，means 3P4W

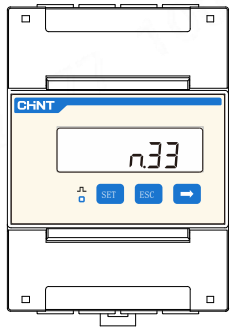

6. Press '➡' to change into 3P3W

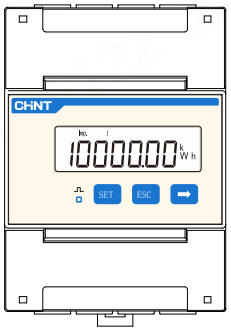

7. Press 'ESC' to save value and quit CT set, press 'ESC' again to back to initial interface

Sampling Voltage ＞ 480Vac (3P3W)

Wiring Guide

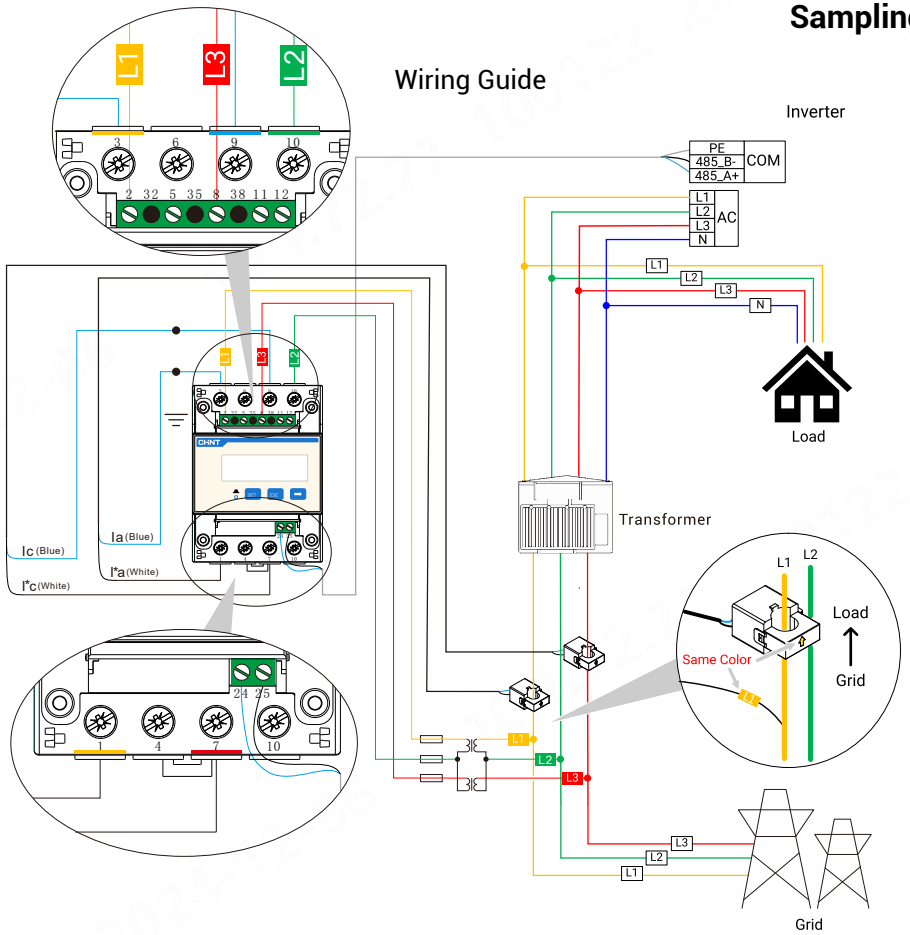

PT Ratio Setup Guide

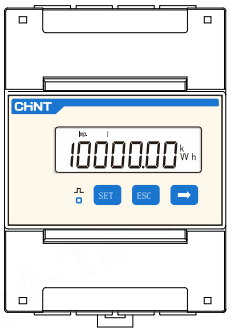

1. Initial interface after power on

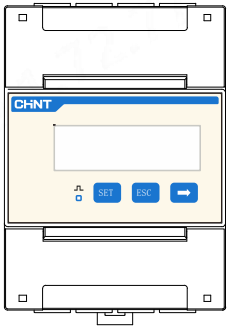

2. Press 'SET' for 3s to enter the password input interface

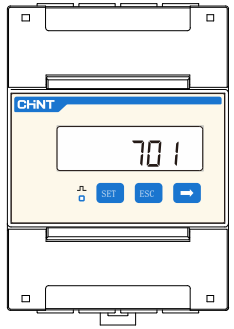

3. Press 'SET' and '➡' to enter the password (default 701)

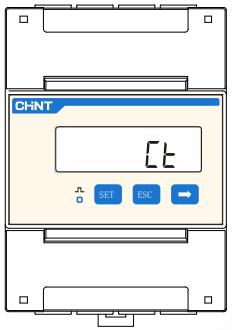

4. Press 'SET' for 3s to enter the setting interface

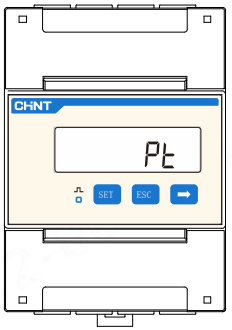

5. Press '➡' to PT

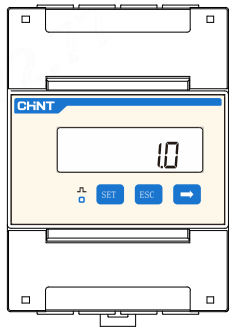

6.Press 'SET' to enter PT set, the default PT is 1.0

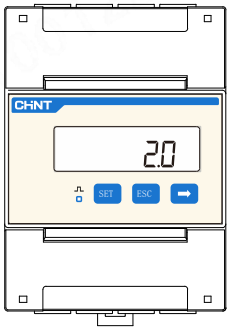

7.Press 'SET' and '➡' to change PT value

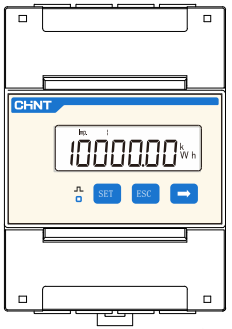

8. Press 'ESC' to save value and quit PT set, press 'ESC' again to back to initial interface

Notes:

1. Sampling voltage ＞480Vac, please refer to the guide to wire, setup the wiring mode and PT ratio
2. Please ensure that the CT wiring is correct, and ensure that the voltage sampling and CT wiring on different phase lines (regardless of phase sequence) meet the corresponding relationship in the table below.

Voltage sampling and CT port wiring table			
	L1 (CT1)	L2	L3 (CT2)
Voltage sampling	2	10	8
CT+ (I*a/I*b/I*c)	1		7
CT- (Ia/Ib/Ic)	3		9

3. Make sure the direction of the arrow on CT point from grid to load.
4. Voltage sampling needs to be through the PT. In order to prevent short circuit at the PT secondary side, a fuse is needed to be connected in series for protection.Recommended fuse specifications: ≥ 100V/1A