Sigen Gateway HomePro TP Installation Guide



Version: 03
Release date: 2025-09-21



Caution

- **Trained or experienced electrical personnel are required to operate the equipment.**
- **Operators should be familiar with national/regional laws, regulations and standards, the structure and working principle of relevant systems.**
- **Before operations, please carefully read operating requirements and precautions in this document and Important Notice. Any equipment damage caused by improper operation will not be covered under warranty.**

1 Product Description

1.1 Appearance and Dimensions

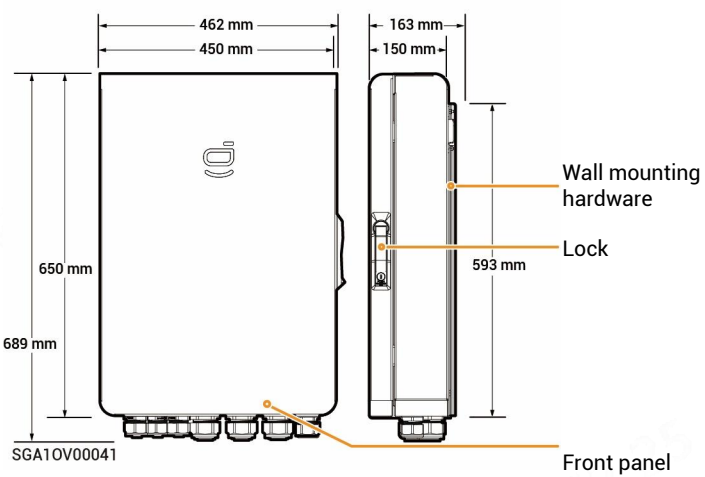

1.2 Port Description

Bottom view

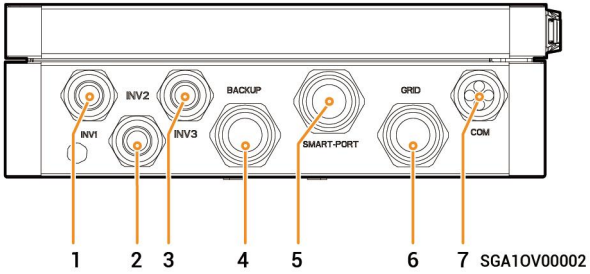

S/N	Name	Marking
1	Wire-in port of inverter 1	INV1
2	(Optional) Wire-in port of inverter 2	INV2
3	(Not available)	INV3
4	Wire-in port of backup household loads	BACKUP
5	Wire-in port for smart loads/Generator	SMART-PORT
6	Wire-in port of power grid	GRID
7	Wire-in port of communication	COM

Interior view

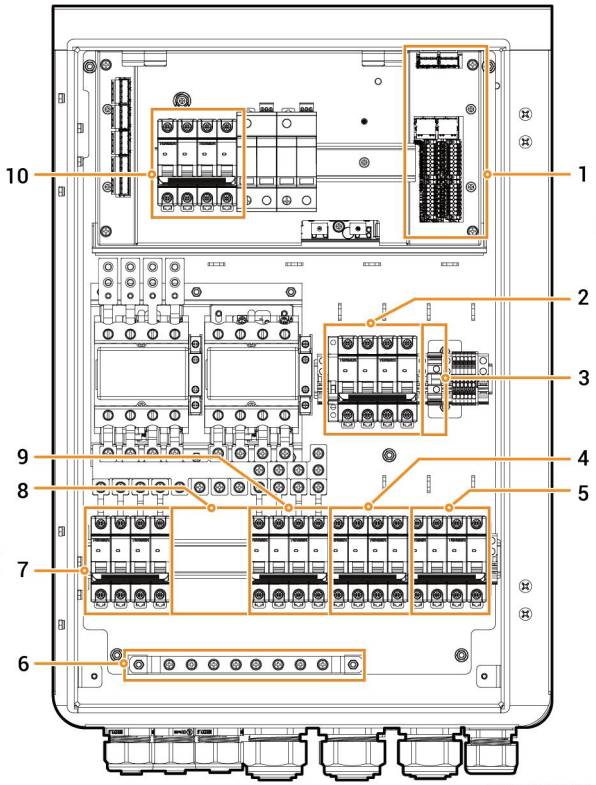

S/N	Label	Description
1	–	Communication terminal (connecting to FE or DI communication cable)
2	QS1	Bypass switch
3	GND	GND terminal
4	QF2	Miniature circuit breaker (Smart loads[1]/Generator)
5	QF1	Miniature circuit breaker (connecting to Power grid)
6	–	Grounding copper busbar
7	QF3	Miniature circuit breaker (connecting to Inverters 1)
8	–	(Optional) Mounting location of circuit breaker (connecting to Inverters 2) [2]
9	QF4	Miniature circuit breaker (connecting to Backup household loads)
10	QF5	Surge protection device

Note [1]:

- All the power equipment in the owner's home can be connected as smart loads.
- To ensure that this product maximizes the benefits to users, it is recommended that the high-power equipment be connected as smart loads (Third-party inverter, heat pumps, pool heaters, clothes dryers, immersion heaters, etc.), which can be cut off when the energy storage system has low power. Other low-power equipment are connected as household loads (lights, routers, etc.)

Note [2]:

The circuit breaker must be prepared by the owner. For specific specifications, please refer to "2 Inspections Before Installation." For installation steps, please refer to "4.2 Circuit Breaker Installation."

Danger

Please check that all switches are turned off at the factory. Always avoid hot-line work.

2 Pre-installation Check

- **Check whether the components are entirely supplied against the packing list and whether the appearance is in good condition. For any problem, contact your sales representative.**
- **Parts and accessories supplied with the packing box are personal assets of the owner and must not be taken away from the installation site.**
- **Check personal protective equipment and installation tools to ensure that they are complete; If not, please make them up.**
- **Check and ensure the completeness of personal protective equipment and installation tools; replenish if necessary.**
- **Check if the factory-installed screws are tight. Before delivery, the tightened screws are marked with lines. If the marks are misaligned, the screws are loose. Tighten the screws again.**

Protective equipment


Safety hat


Safety glasses


Dust mask


Protective gloves


Insulating gloves


Insulating shoes

Installation tool

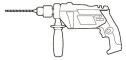
Power drill


Vacuum cleaner

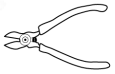
Wire cutter

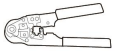
Network cable pliers


Crimping pliers


Wire stripper


Scissors


Cable tie


Heat shrinkable sleeve


Heat gun

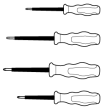
Insulation screwdriver set

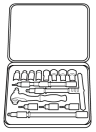
Insulation sleeve set


Torque socket wrench


Marker

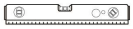
Level

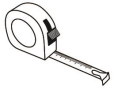
Tape measure


Utility knife

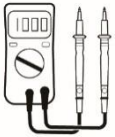
Multimeter


Rubber mallet


Adjustable torque wrench for external hexagon bolts


Cold terminal crimping pliers

Installer-provided cable

Caution

- **The specifications of installer-provided cables and circuit breakers shall meet the cable laws and standards of the countries/regions.**
- **L1, L2, L3, N and PE should be connected to other equipment in sequence without mixing.**

S/N	Cable name		Recommended specifications
1	Functional ground cable		Outdoor single-core copper flexible cable Cross-sectional area of core conductor: 6–10 mm²
2	AC cable	Connected to inverter	Outdoors five-core copper flexible cable (L1, L2, L3, N, PE) • SigenStor EC/Sigen Hybrid (5.0–15.0) TP: Cross-sectional area of single-core conductor: 4–6 mm²; Outer diameter: 9–25 mm. • SigenStor EC/Sigen Hybrid (17.0–20.0) TP: Cross-sectional area of single-core conductor: 6–10 mm²; Outer diameter: 9–25 mm. • SigenStor EC/Sigen Hybrid (25.0–30.0) TP: Cross-sectional area of single-core conductor: 10–16 mm²; Outer diameter: 9–25 mm. 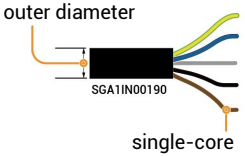
3		Connected to backup household loads	Outdoor five-core copper flexible cable (L1, L2, L3, N, PE) Cross-sectional area of single-core conductor: 16 mm²; Outer diameter: 19–32 mm
4		Connected to power grid	
5		(Optional) Connected to smart loads/Generator	
6	RJ45 network cable		Outdoor eight-conductor shielded twin-twisted pair cable Cross-sectional area of core conductor: 0.13–0.2 mm² Outer diameter: 4–7.5 mm Single cable length: ≤ 100 m[1] RJ45 network cables are EIA/TIA 568B standard network cables
7	(Optional) DI/DO signal cable		Outdoor two-conductor shielded cable Cross-sectional area of core conductor: 0.2–1.5 mm² Outer diameter: 2–4 mm

Note [1]: The cable length should be limited for good communication. Too long cable degrades the communication effect.

Self-supplied circuit breaker

No.	Three-phase inverter capacity (kW)	Rated current (A)	Recommended switch specifications	Recommended cable specification
1	5	7.6	C16	4 mm²
2	6	9.1	C16	4 mm²
3	8	12.2	C16	4 mm²
4	10	15.2	C32	6 mm²
5	12	18.2	C32	6 mm²
6	15	22.8	C32	6 mm²
7	17	25.8	C40	10 mm²
8	20	30.4	C40	10 mm²
9	25	38.0	C63	16 mm²
10	30	45.6	C63	16 mm²

3 Site Selection Requirements

Tips

- **Before installing the equipment, please be sure to carefully read the following installation requirements. The company will not be liable for any functional abnormalities or damages arising from the operation of the equipment if the installation requirements are not followed, even in cases leading to personal safety incidents.**
- **During actual installation, the selection of installation location should comply with local firefighting, environmental protection regulations, and other relevant laws. The specific installation location planning should be subject to the installer or engineering, procurement, and construction (EPC) contracts.**

Installation environment

- Do not install the equipment in smoky, flammable, or explosive environments.
- Avoid exposing the equipment to direct sunlight, rain, standing water, snow, or dust. Install the equipment in a sheltered place. Take preventive measures in operating areas prone to natural disasters such as floods, mudslides, earthquakes, and typhoons.
- Do not install the equipment in an environment with strong electromagnetic interference.
- Ensure that the temperature and humidity of the installation environment comply with the equipment's requirements.
- The equipment should be installed in an area that is at least 500 m away from corrosion sources that may result in salt damage or acid damage (corrosion sources include but are not limited to seaside, thermal power plants, chemical plants, smelters, coal plants, rubber plants, and electroplating plants).
- In areas with good marine environments (such as Norway, where the nearshore salinity is ≤ 28 psu), the mounting distance of the device from the coastline can be appropriately relaxed to ≥ 200 m.
- If the outer surface of the device is damaged, please repaint the device in time.

Installation position

- Do not tilt or overturn the equipment to ensure that it is installed horizontally.
- Do not install the equipment in places easily touched by children.
- Do not install the equipment in places with fire or damp.
- Please keep away from the daily work and living places.
- Do not install the equipment in a sealed, poorly ventilated location without fire protection measures and difficult access for firefighters.
- The equipment is hot when it is running. If the equipment is installed indoors, please ensure good indoor ventilation and avoid significant indoor temperature rise by 3° C while the equipment is running. Otherwise, the equipment will be derated.
- Do not install the equipment in mobile scenarios such as RVS, cruise ships, and trains.
- You are advised to install the equipment in places that are easy to access, install, operate, maintain status.
- Keep the equipment clear of vehicle passage when installed in a garage to avoid collisions.

Mounting surface

- Do not install the equipment on a flammable carrier.
- The installation carrier must meet load-bearing requirements. Solid brick-concrete structure, concrete walls is recommended.
- The surface of the installation carrier must be smooth and the installation area must meet the installation space requirements.
- No water or electricity is routed inside the carrier to prevent drilling hazards during equipment installation.

Tips

During the installation of gateway, the reserved installation space can be reasonably adjusted according to the actual site conditions.

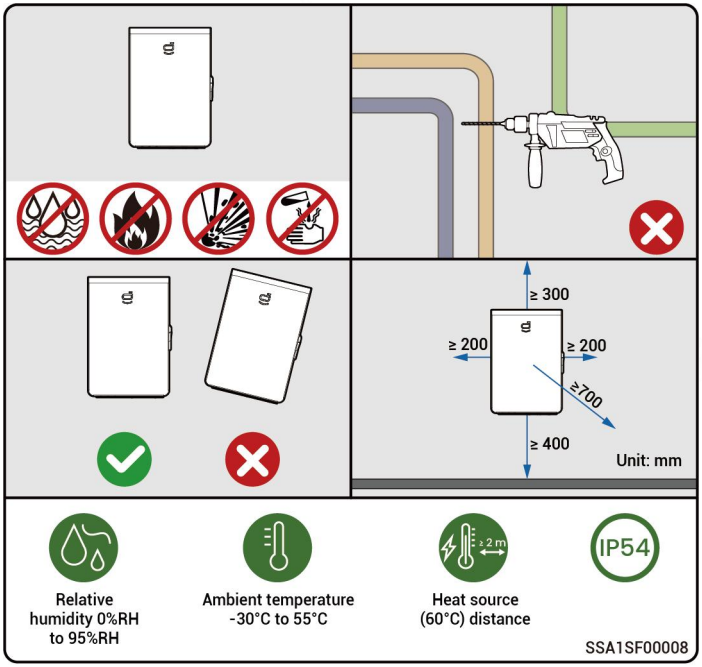

4 Equipment Installation

4.1 Wall Mounting

1

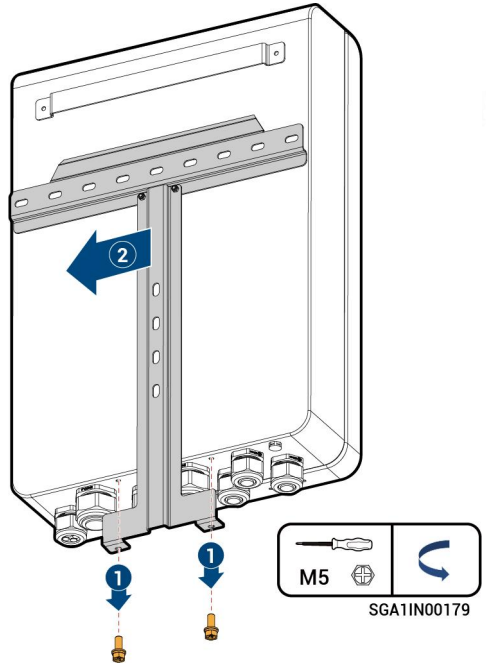

2

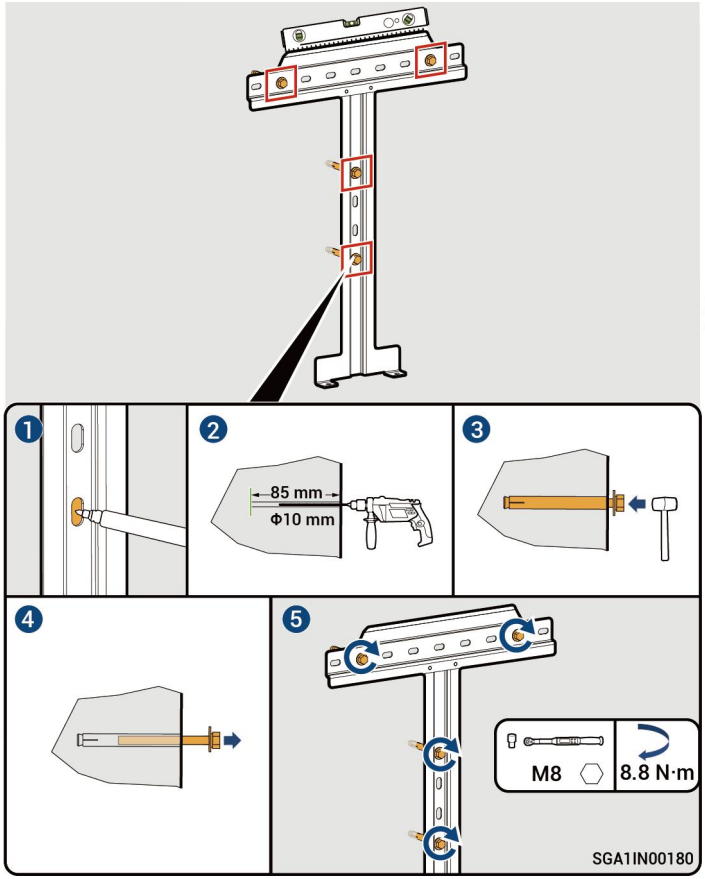

3

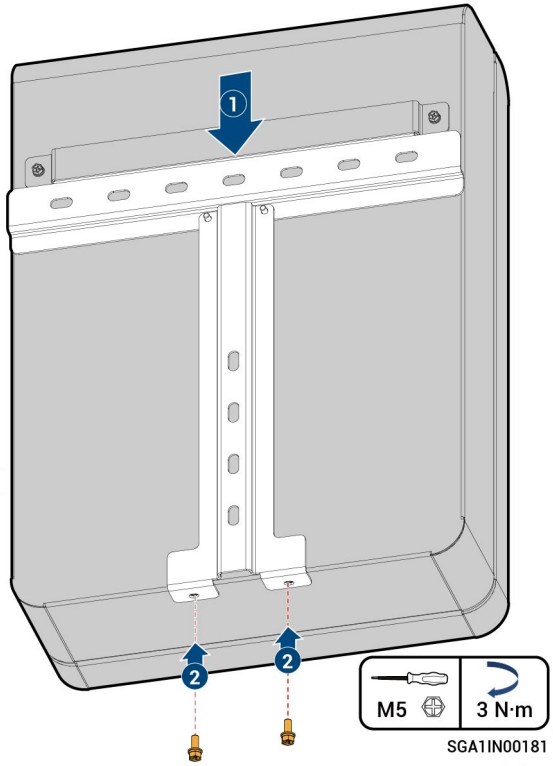

4.2 Circuit Breaker Installation

1 **(Optional) If you need to use a self-supplied circuit breaker to connect the inverter, perform this step.**

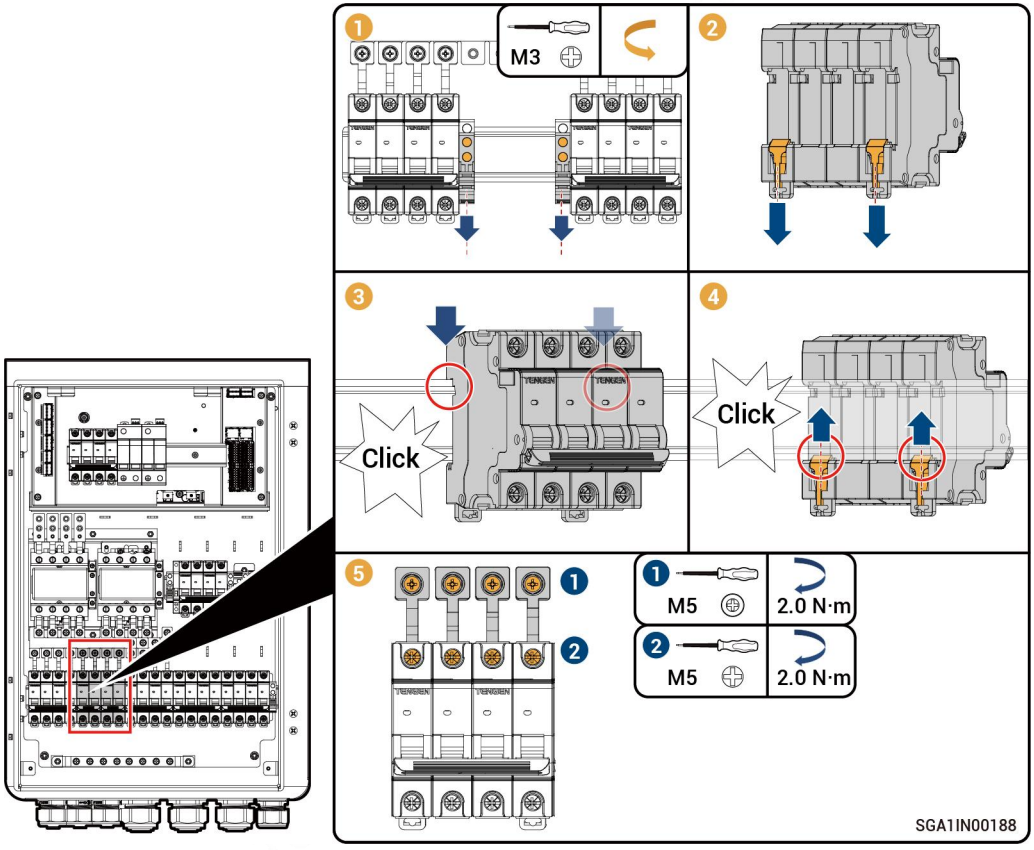

5 Cable Connection

5.1 Recommended Routing

Danger

Do not perform operations on the equipment with power on. Before operation, please make sure all power supplies to the equipment have been disconnected, including but not limited to the grid side, inverter and Generator power switches.

Caution

- **Connect cables according to the corresponding labels to prevent personal injury and equipment damage caused by incorrect cable connection.**
- **To ensure that the inverters, loads, and the Gateway are connected to the common ground point, connect the PE cable.**

Solution 1: The device is reliably grounded.

Solution 2: The device is not reliably grounded.

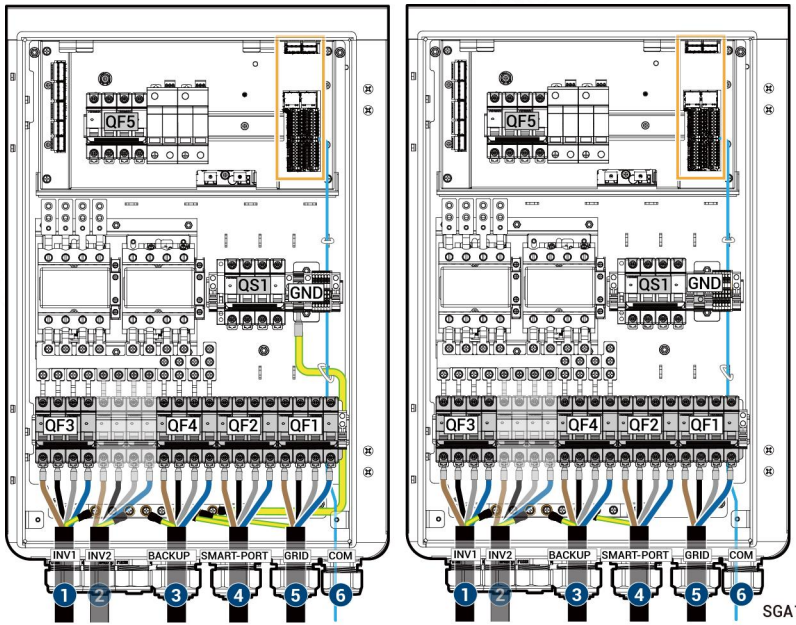

SGA1IN00171



AC cable

Communication cable (FE and DI, DO)

Functional ground cable

1. (INV1) Connect to Inverter1
2. (Optional)(INV2) If installing a self-supplied circuit breaker, you can connect it to inverter 2
3. (BACKUP) Connect to Backup household loads
4. (SMART-PORT) Connect to Smart loads/Generator
5. (GRID) Connect to Power grid
6. (COM) Communication cable

5.2 Opening Equipment Door

1

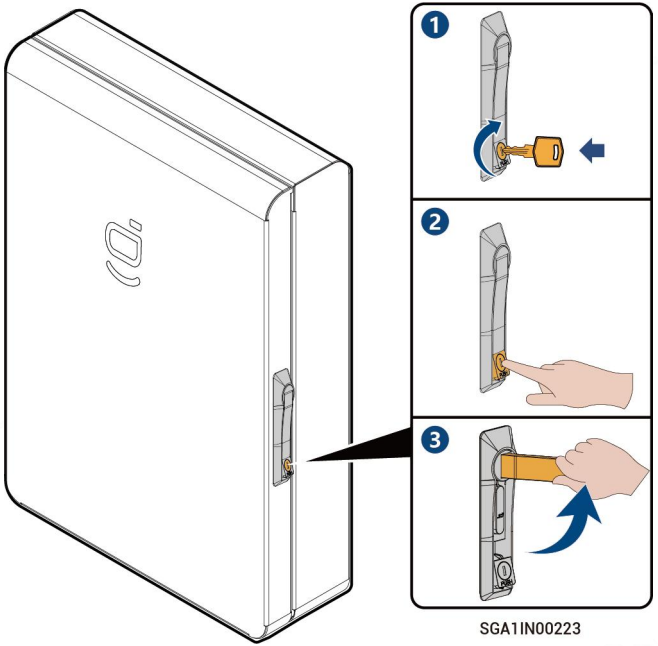

SGA1IN00223

2

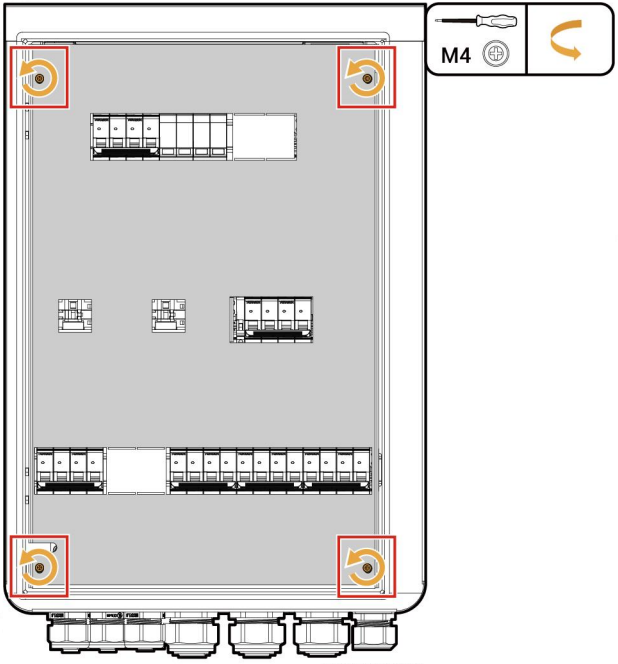

SGA1IN00184

5.3 Functional ground cable Connection

Danger

- **If the device is not reliably grounded, do not connect the functional ground cable.**
- **If the device is reliably grounded, the functional ground cable shall be connected.**

Caution

In off-grid mode, the N wire in the system is short-connected to the functional grounding wire through the relay to create a grounding system. When earth leakage or short circuit occurs in loads, leakage protection and overcurrent protection devices are triggered to prevent these faults.

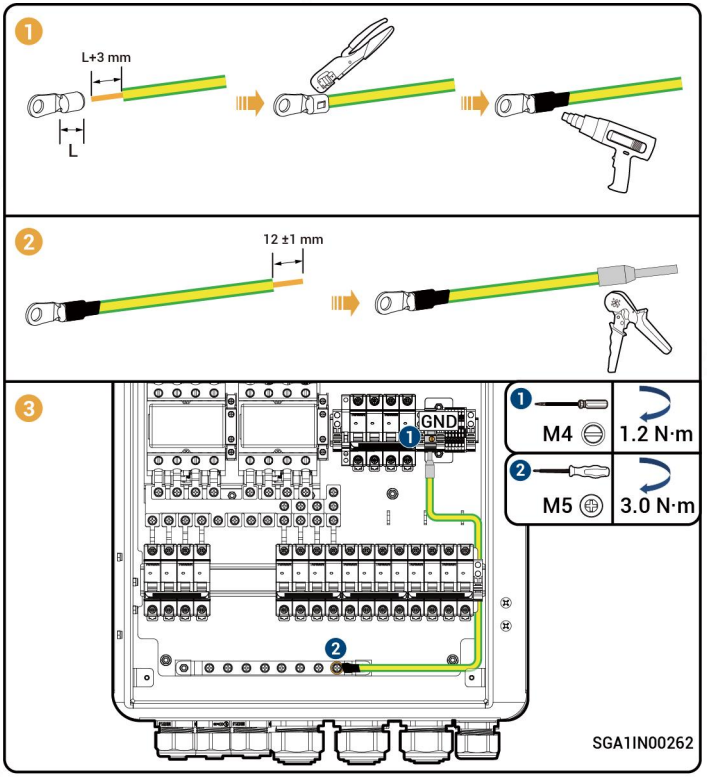

5.4 Connecting Inverter / Backup household loads Smart loads/ Power Grid

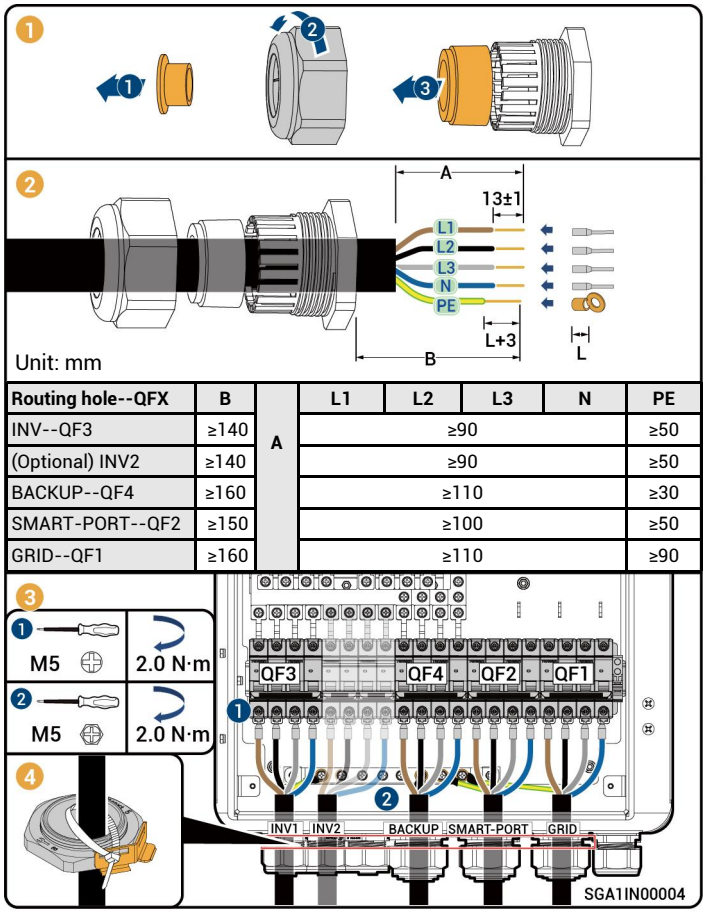

Routing hole--QFX	B	A	L1	L2	L3	N	PE
INV--QF3	≥140		≥90				≥50
(Optional) INV2	≥140		≥90				≥50
BACKUP--QF4	≥160		≥110				≥30
SMART-PORT--QF2	≥150		≥100				≥50
GRID--QF1	≥160		≥110				≥90

5.5 Communication port introduction

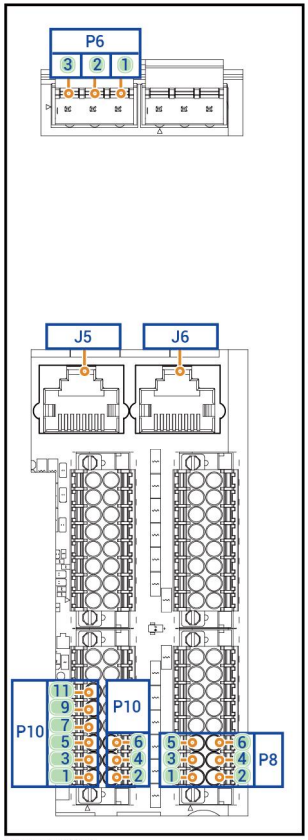

SGA1OV00043

Tips

- **For the diesel generator that starts when the dry contacts are open, connect the dry contacts to DO3-NO and DO3-COM.**
- **For the diesel generator that starts when the dry contacts are closed, connect the dry contacts to DO3-NC and DO3-COM.**

Interface Description	Tag number	Label number	Definition	Function	Description
(Reserved) 485 (RS-485 interface)	P6	3	485_A	RS-485 signal_A+	Used to connect devices for RS-485 communication.
		2	485_B	RS-485 signal_B-	
		1	PE	Protective earthing	
FE (network cable interface)	J5	-	FE1	Fast Ethernet 1	Used to connect an inverter.
	J6	-	FE2	Fast Ethernet 2	Used to connect the Sigen EV AC charger, inverter, router, etc.
DO3	P10	11	DO3-NO	Digital output 3 - Normal Open	• DO3 interface can be used for controlling generator start in two-wire start mode. • NO/COM is normally open contact and NC/COM is normally close contact.
		9	DO3-COM	Digital output 3 - Common	
		7	DO3-NC	Digital output 3 - Normal Close	
DO2		6	DO2-NO	Digital output 2 - Normal Open	• DO2 is used for the output of the contactor status feedback signal for the diesel generator. • NO/COM is normally open contact and NC/COM is normally close contact.
		4	DO2-COM	Digital output 2 - Common	
		2	DO3-NC	Digital output 2 - Normal Close	
DO1		5	DO1-NO	Digital output 1 - Normal Open	• DO1 is used for the output of the contactor status feedback signal for the grid. • NO/COM is normally open contact and NC/COM is normally close contact.
		3	DO1-COM	Digital output 1 - Common	
		1	DO1-NC	Digital output 1 - Normal Close	

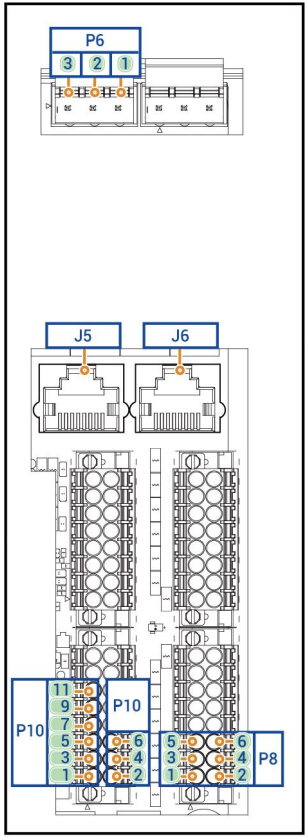

SGA1OV00043

Interface Description	Tag number	Label number	Definition	Function	Description
(Reserved) DI3 (Digital input signal 3)	P8	5	DI3_+	Digital input 3	• DI3 can be used to connect the feedback signal of an external automatic transfer switch (ATS) to identify whether the "smart load port" of the Gateway is powered by the power grid or a diesel generator. • Low impedance input (the feedback signal of the ATS is short-circuited) indicates that the port is powered by the power grid. High impedance input (the feedback signal of the ATS is open circuit) indicates that the port is powered by a diesel generator.
		6	DI3_GND	Signal GND	
DI2 (Digital input signal 2)		3	DI2_+	Digital input 2	• DI2 can be used to connect a feedback signal of an external automatic transfer switch (ATS) to identify whether the "grid port" of the Gateway is powered by the power grid or a diesel generator. • Low impedance input (the feedback signal of the ATS is short-circuited) indicates that the port is powered by the power grid. High impedance input (the feedback signal of the ATS is open circuit) indicates that the port is powered by a diesel generator.
		4	DI2_GND	Signal GND	
DI1 (Digital input signal 1)		1	DI1_+	Digital input 1	Open circuit indicates that the emergency stop takes effect.
		2	DI1_GND	Signal GND	

5.5.1 Connecting RJ45 Network Cable

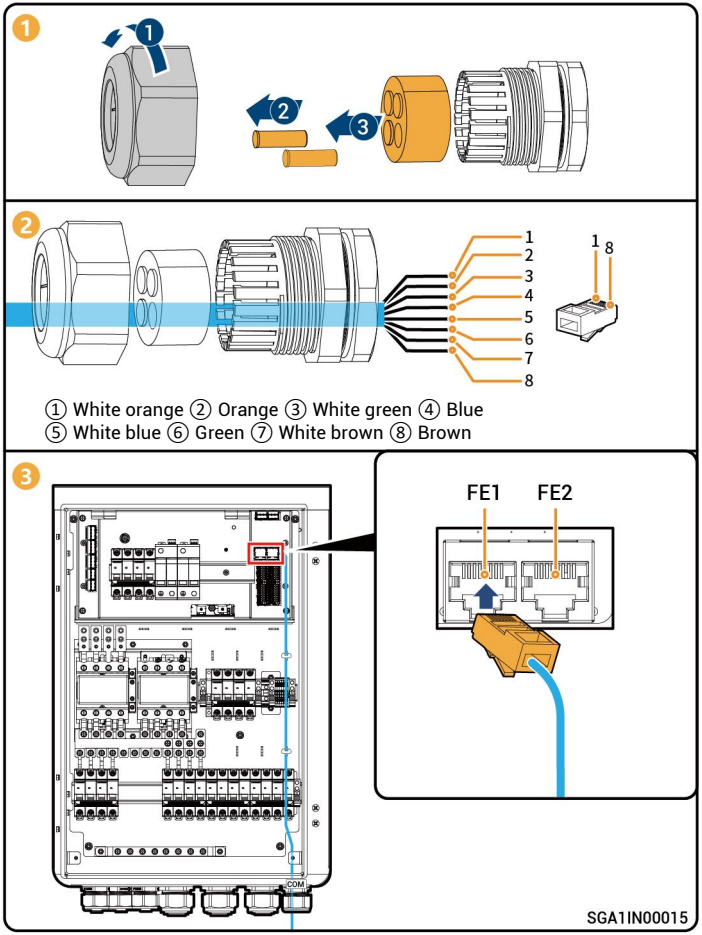

5.5.2 Connecting DI, DO Cable

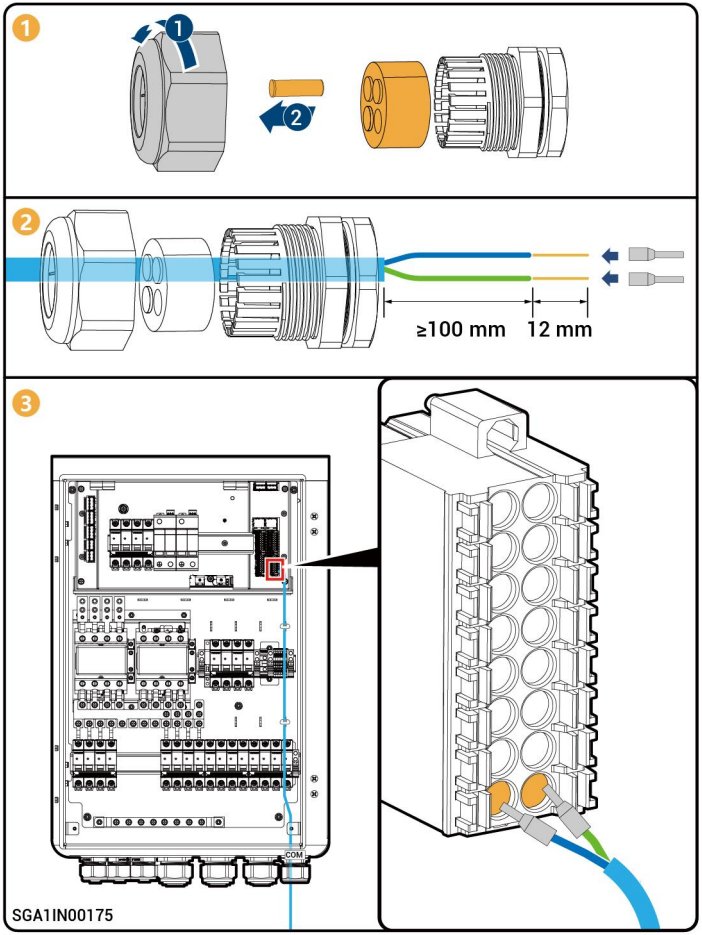

5.6 Installing Inner panel

Check the following items against the provided table, tighten routing holes, and install the protective covers.

S/N	Check Item
1	The equipment has been securely installed.
2	Ground cables, DC cables, signal cables, etc. are installed accurately without leftovers.
3	All screws or terminal blocks on the device have been installed in place and are not loose.
4	There are no sharp spikes or acute angles at the cut point of the cable tie.
5	The Gateway protective cover is locked.
6	There is no construction left inside or outside the equipment.

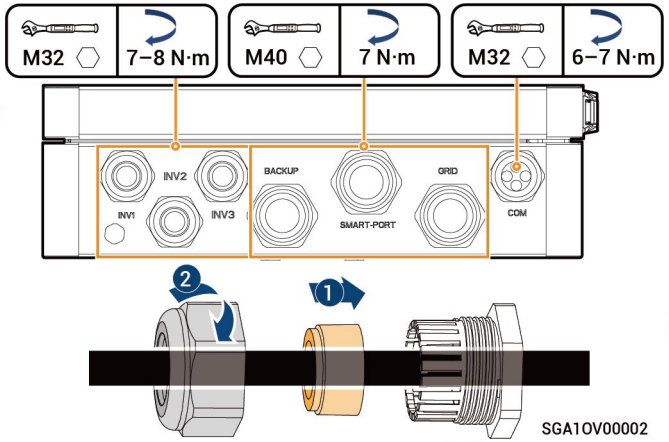

SGA1OV00002

Caution

Measure the voltage of the switch QF1 on the power grid side and check that the measured value is within the allowable range. Ensure that the cable is connected properly, tighten routing holes, and install protective covers.

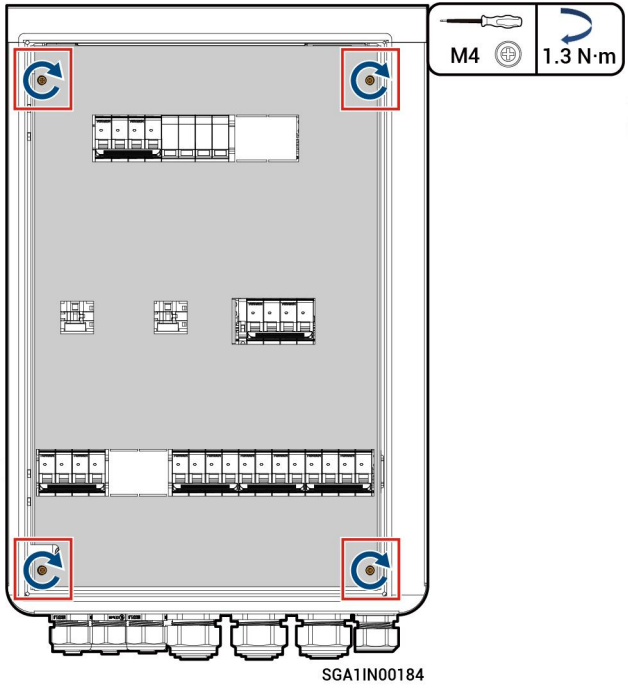

SGA1IN00184

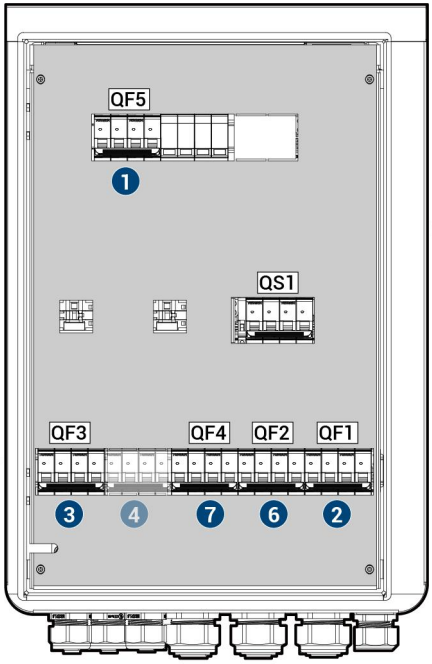

SGA1IN00185

Tips

- Turn on the front switch of the equipment.
- There is a risk of electric shock if the Gateway is left ungrounded.
- If the surge protective device is not switched on, failure of surge protection may lead to damage to household loads and Gateway.

1

Caution

Do not turn on the miniature circuit breaker when it is not connected to its corresponding device.

1. Switch on the miniature circuit breaker (Surge Protection Device) QF5.
2. Switch on the miniature circuit breaker (Power grid) QF1.
3. Switch on the miniature circuit breaker (Inverter 1) QF3.
4. (Optional) If installing a self-supplied circuit breaker, you can switch on the miniature circuit breaker (Inverter 2).
5. Wait until inverter is powered on.
6. Switch on the miniature circuit breaker (Smart loads/Generator) QF2.
7. Switch on the miniature circuit breaker (Backup household loads) QF4.

2 Upon completion of the operation, close the front panel of the Gateway and lock the sides with the key key delivered with the case; the power-on is completed.

Caution

After each wiring change, please perform a wiring check on the mobile app to ensure proper connection before proceeding with subsequent operations.

Danger

The bypass switch QS1 should be kept turned off.

Sigenergy Technology Co., Ltd.

Website	LinkedIn	YouTube

www.sigenergy.com

Copyright © Sigenergy Technology Co., Ltd. 2025. All rights reserved.

Description in this document may contain predictive statements regarding financial and operating results, product portfolio, new technology, configurations and features of product. Several factors could cause difference between actual results and those expressed or implied in the predictive statements. Therefore, description in this document is provided for reference purpose only and constitutes neither an offer nor an acceptance. Sigenergy Technology Co., Ltd. may change the information at any time without notice.