We support PV systems

TiltUp Vento System

ASSEMBLY INSTRUCTIONS

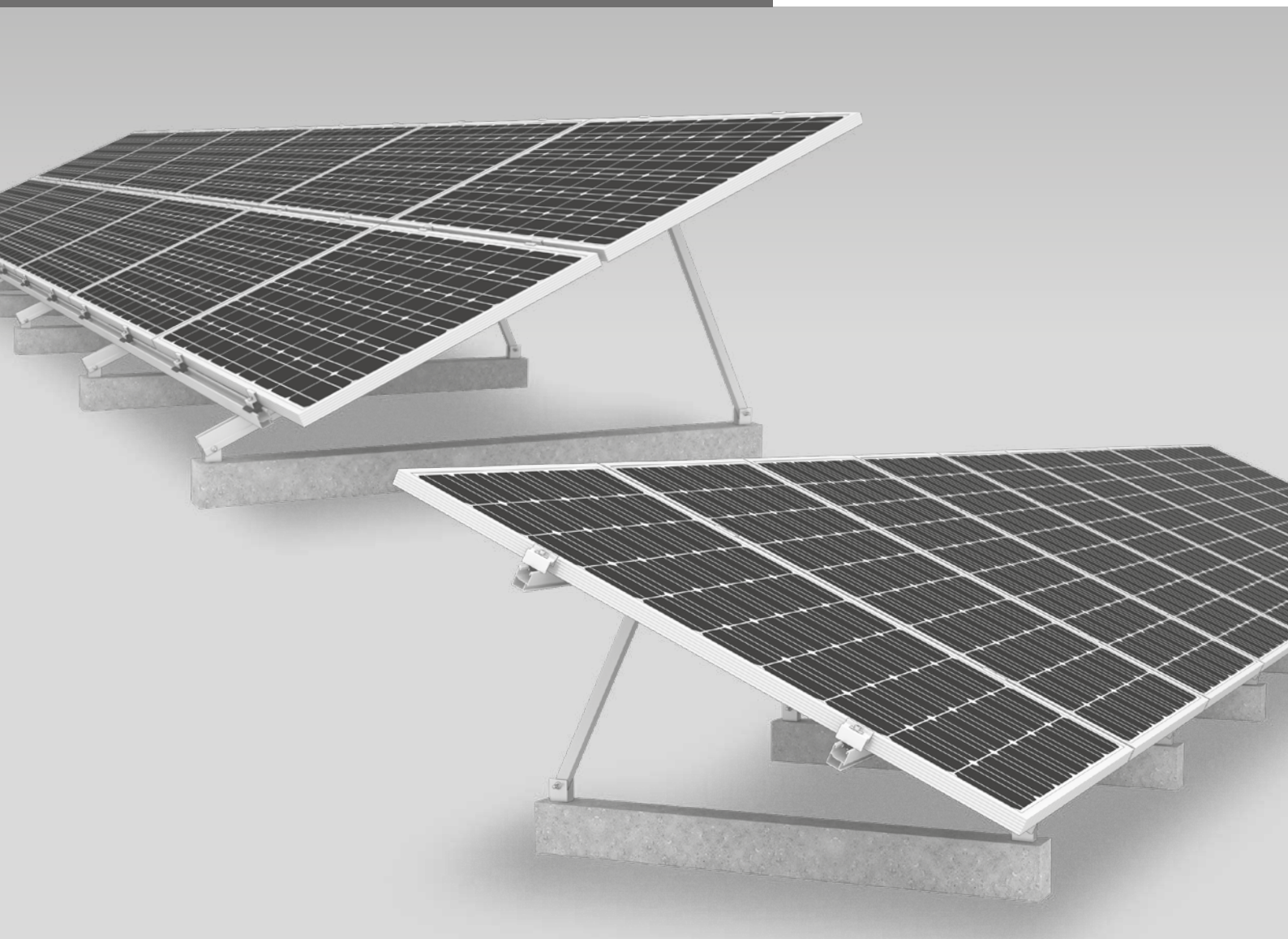

Content

/ Tools overview 3

/ General safety information 4

/ The following guidelines apply 5
- Planning with K2 Base 5
- Roof requirements 5
- Static requirements 5
- Important mounting instructions 5

/ Components 6
- Basic and portrait components 6
- Landscape single row 8
- Landscape double row 9
- Landscape single row with AddOn 10
- Landscape double row with AddOn 11

/ Assembly dimensions and ballast 12
- Cantilever and Span width 12
- Module orientation: Portrait 13
- Module orientation: Landscape single row 14
- Module orientation: Landscape double row 15
- Module orientation: Landscape single row with AddOn 16
- Module orientation: Landscape double row with AddOn 17
- Ballast scheme: Naming and allocation 18

/ Assembly 20
- Basic steps 20
- Portrait assembly 23
- Landscape assembly, single row 23
- Landscape assembly, double row 24
- Landscape assembly, single row with AddOn 24
- Landscape assembly, double row with AddOn 25

/ Notes 26

Quality tested – several certifications

K2 Systems stands for secure connections, highest quality and precision. Our customers and business partners have known that for a long time. Independent institutes have tested, confirmed and certified our capabilities and components.

Please find our quality and product certificates under:
k2-systems.com/en/technical-information

Tools overview

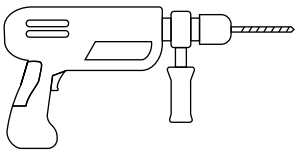

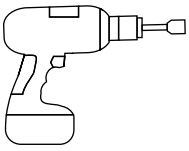



6 mm



10 mm
13 mm





6 mm

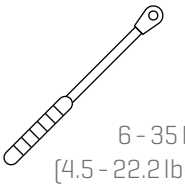

6 - 35 Nm
(4.5 - 22.2 lb-ft)



6 mm

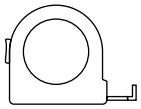

≥ 3.0 m



≥ 6.0 m

K2 App and Base – Digital planning workflow

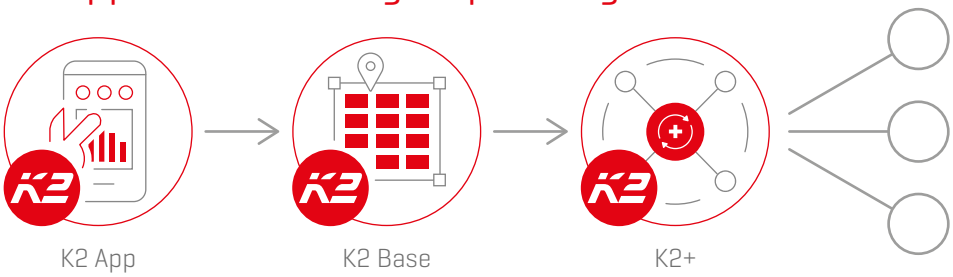

K2 App | K2 Base | K2+

Do you already know our digital services? Use our K2 Roof Check App now and record the first important data directly at the customer or project site. Simply transfer the data to our online planning software K2 Base. Here you can plan your project easily, safely and quickly. You receive a detailed project report with assembly plan and static report.
The K2+ interface enables seamless project data transfer to the planning tools of well-known inverter manufacturers or yield planning tools.

Get started and register now:

app.k2-systems.com

base.k2-systems.com

General safety information

Please note that our general mounting instructions must be followed at all times and can be viewed online at k2-systems.com/en/technical-information

- The equipment may only be installed and operated by qualified and adequately trained installers.
- Prior to installation, ensure that the product complies with on-site static loading requirements.
  For roof-mounted systems, the roof load-bearing capacity must always be checked.
- National and local building regulations and environmental requirements must be adhered to.
- Compliance with health and safety regulations, accident prevention guidelines and applicable standards is required.
  - Protective equipment such as safety helmet, boots and gloves must be worn.
  - Roofing works must be in accordance with roofing regulations utilising fall protection safeguards when eaves height exceeds 3 m.
  - At least two people must be present for the duration of the installation work in order to provide rapid assistance in the event of an emergency.
- K2 mounting systems are continuously developed and improved and the installation process may thereby change at any time. Prior to installation consult our website at www.k2-systems.com/en/technical-information for up-to-date instructions.
  We can send you the latest version on request.
- The assembly instructions of the module manufacturer must be adhered to.
- Equipotential bonding/grounding/earthing between individual parts is to be performed according to country specific standards, as well as national laws and regulations.
- At least one copy of the assembly instructions should be available on site throughout the duration of the installation.
- Failure to adhere to our general safety and assembly instructions and not using all system components, K2 is not liable for any resulting defects or damages. We do not accept liability for any damage resulting in the use of competitor's parts. Warranty is excluded in such cases.
- K2 Systems GmbH reserves the right to exclude liability in case of disregard of our General Safety Instructions as well as in case of installation or mounting of components of a competitor.
- If all safety instructions are adhered to and the system is correctly installed, there is a product warranty entitlement of 12 years! We strongly recommend reviewing our terms of guarantee, which can be viewed at www.k2-systems.com/en/technical-information
  We will also send this information on request.
- Dismantling of the system is performed in reverse order to the assembly.
- K2 stainless steel components are available in different corrosion resistance classes. Each structure or component must be carefully checked for possible corrosion exposure.

The following guidelines apply

The TiltUp Vento system can be installed as standard under the following conditions. Even if the system is capable of meeting higher demands through the integration of safety standards, please get in touch with your contact at K2 Systems if the specified values are exceeded.

Planning with K2 Base

We recommend our free online software K2 Base for the planning. In five steps, you can plan the right assembly system and get a construction recommendation, parts list and the structural analysis report. Simply register and start planning: base.k2-systems.com

Roof requirements

This system can be positioned on all common flat roofs with a pressure-resistant base and a roof pitch of ≤ 3° with ballast or fixed with MultiMonti screws directly on the roof. In second case the concrete requirements must be checked.

Static requirements

- It is essential to check that the roof structure has sufficient residual load capacity and that the pressure capacity of the roof insulation (where present) is not exceeded.
- Suitable for framed modules with a frame height 30 - 50 mm
- Permissible module dimensions: length 1386 – 2293 mm, width 950 - 1135 mm

Important mounting instructions

Mounting system

- The inclination of the TiltUp Vento system is either 20, 25 or 30°.
- A minimum quantity of triangles is two
- A minimum distance to the roof edge of 600 mm must be observed.
- Ensure a thermal separation (distance between module arrays) after a maximum of 15 m in the module row direction and in the direction of the base rail.
- In the event of exceptional circumstances (such as storms, heavy rain, earthquakes, etc.), the system should be checked by a specialist. Should an inspection find damage or plastic deformation (such as in the module clamp area) the components must be replaced.

Modules and clamping

- Tightening torque of 14 Nm for all module clamps
- Adhere to module manufacturer recommendations for clamping area and module installation (see module manufacturer instructions).

General information

- External influences that act on this system are only reflected in the design of the ballast to a limited degree. For instance, unevenness, thermal elongation, moss, water accumulation and ageing of the sheeting cannot be considered, although these factors might also precipitate system displacement under certain circumstances. We recommend you check whether the system requires additional mechanical attachment, as the impact of these influences may be greater on slanted roofs.
- It is important to ensure that the rain water flow is not hindered.
- On-site general standards and regulations for lightning protection must be observed and consultation with a specialist to create a lightning protection concept is recommended (use lightning protection clamp if necessary).

Components

Basic and portrait components

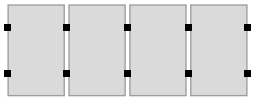

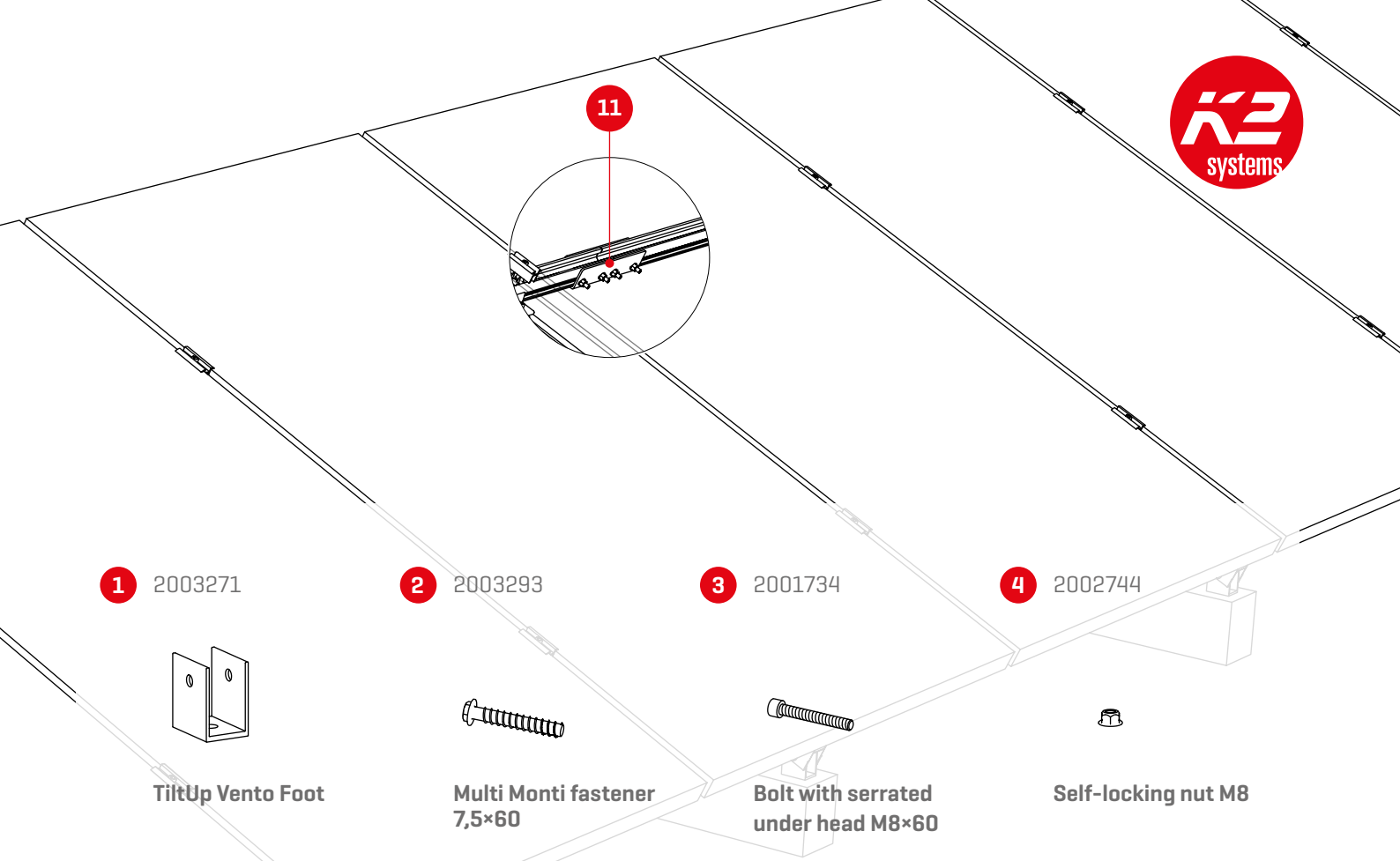

1 2003271

TiltUp Vento Foot

2 2003293

Multi Monti fastener 7,5×60

3 2001734

Bolt with serrated under head M8×60

4 2002744

Self-locking nut M8

5 Item number see table below



TiltUp Vento Brace

6 Item number see table below

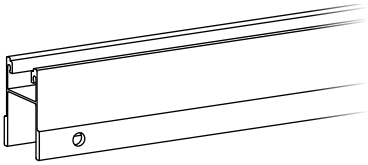

TiltUp Vento Beam

7 Item number project specific

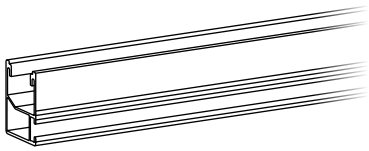

SingleRail 36 / 50

8 2003145



Climber 36 / 50 Set

9 Item number project specific

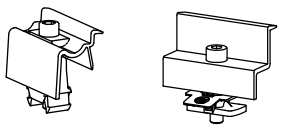

Module end clamp OneEnd
Alternatively end clamp standard

10 Item number project specific

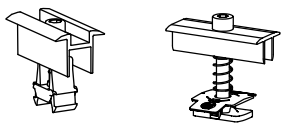

Module middle clamp OneMid
Alternatively middle clamp XS

11 2001976 / 2002404

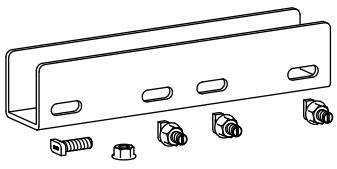

SingleRail 36 / 50 Connector Set

Item numbers Brace / Beam

Module length [mm]	Inclination	TiltUp Vento Brace		TiltUp Vento Beam	
		length [mm]	Item No.	length [mm]	Item No.
1,386 - 1,751	20°	446	2003269	1,300	2003263
	25°	558	2003268		
	30°	679	2003267		
1,752 – 2,293	20°	558	2003268	1,600	2003262
	25°	679	2003267		
	30°	856	2003266		

Landscape single row

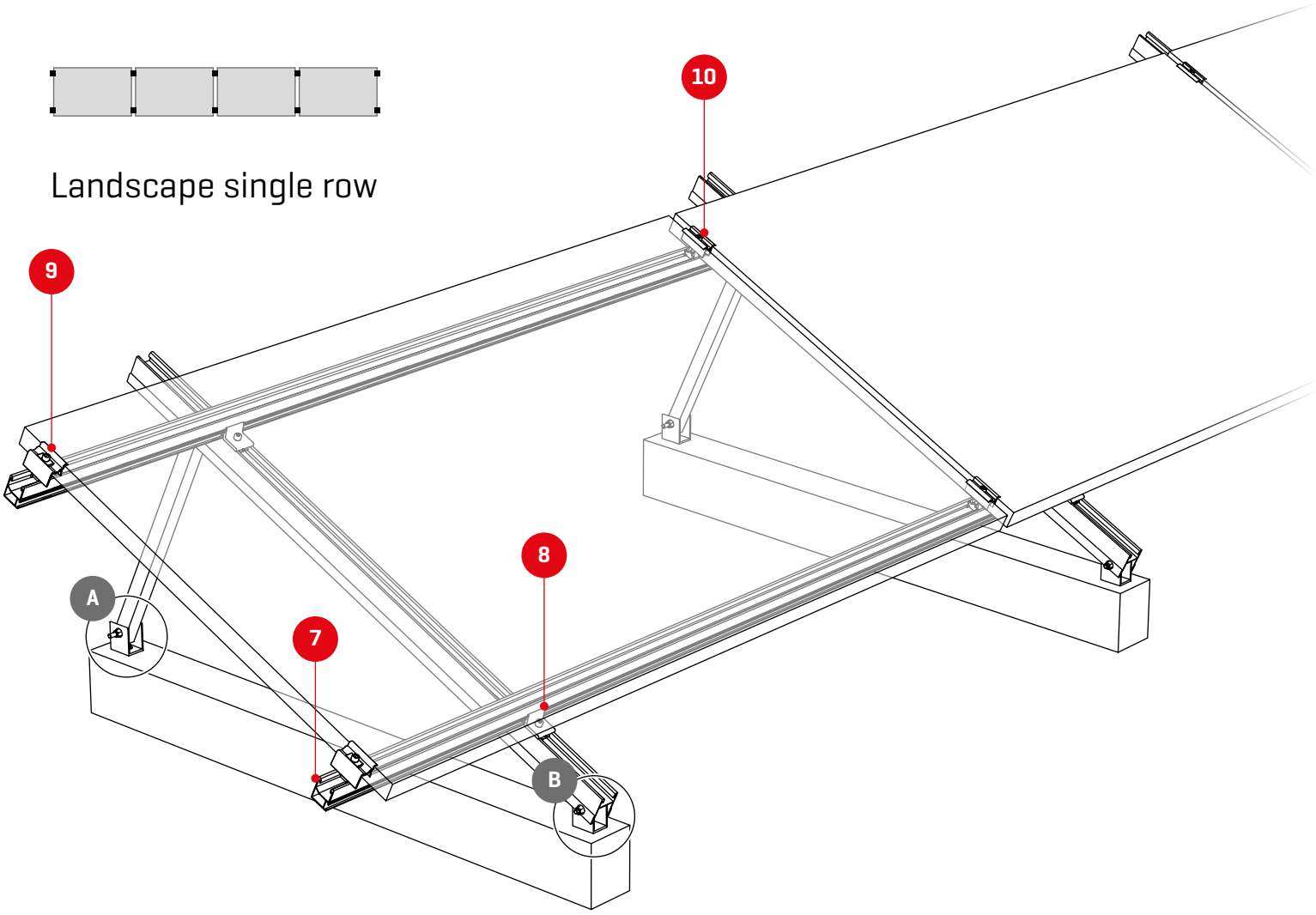

A See p. 6 / 7

B See p. 6 / 7

5 Item number see table below
TiltUp Vento Brace

6 Item number see table below
TiltUp Vento Beam

7 Item number project specific
SingleRail 36 / 50

8 2003145
Climber 36 / 50 Set

9 Item number project specific
Module end clamp

10 Item number project specific
Module middle clamp

Item numbers Brace / Beam

Module width [mm]	Inclination	TiltUp Vento Brace		TiltUp Vento Beam	
		length [mm]	Item No.	length [mm]	Item No.
950 – 1,135	20°	446	2003269	1,300	2003263
	25°	558	2003268		
	30°	679	2003267		

Landscape double row

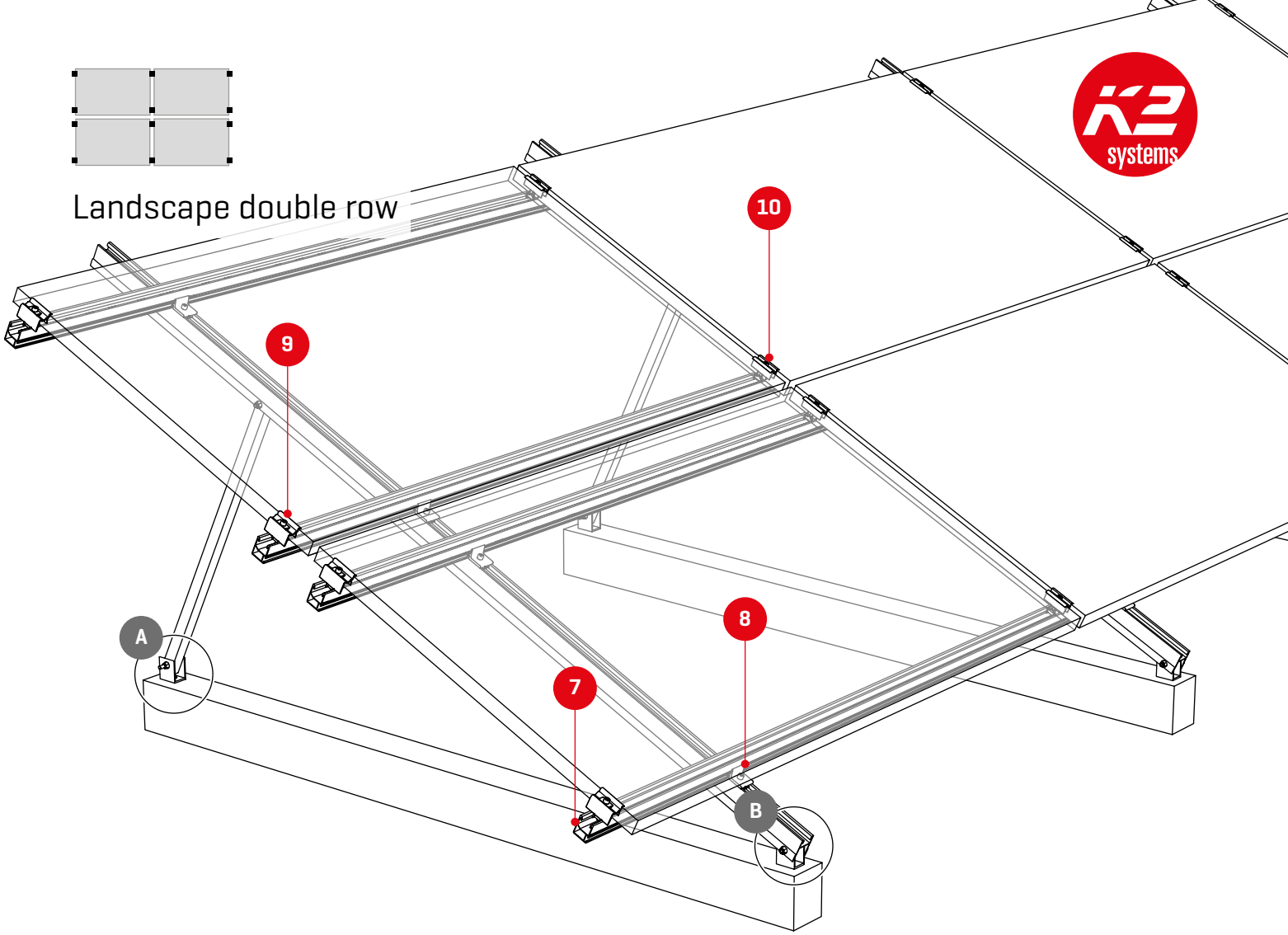

A See p. 6 / 7

B See p. 6 / 7

5 Item number see table below
TiltUp Vento Brace

6 Item number see table below
TiltUp Vento Beam

7 Item number project specific
SingleRail 36 / 50

8 2003145
Climber 36 / 50 Set

9 Item number project specific
Module end clamp

10 Item number project specific
Module middle clamp

Item numbers Brace / Beam

Module width [mm]	Inclination	TiltUp Vento Brace		TiltUp Vento Beam	
		length [mm]	Item No.	length [mm]	Item No.
950 – 1,135	20°	679	2003267	2,360	2003261
	25°	856	2003266		
	30°	1,047	2003265		

Landscape single row with AddOn

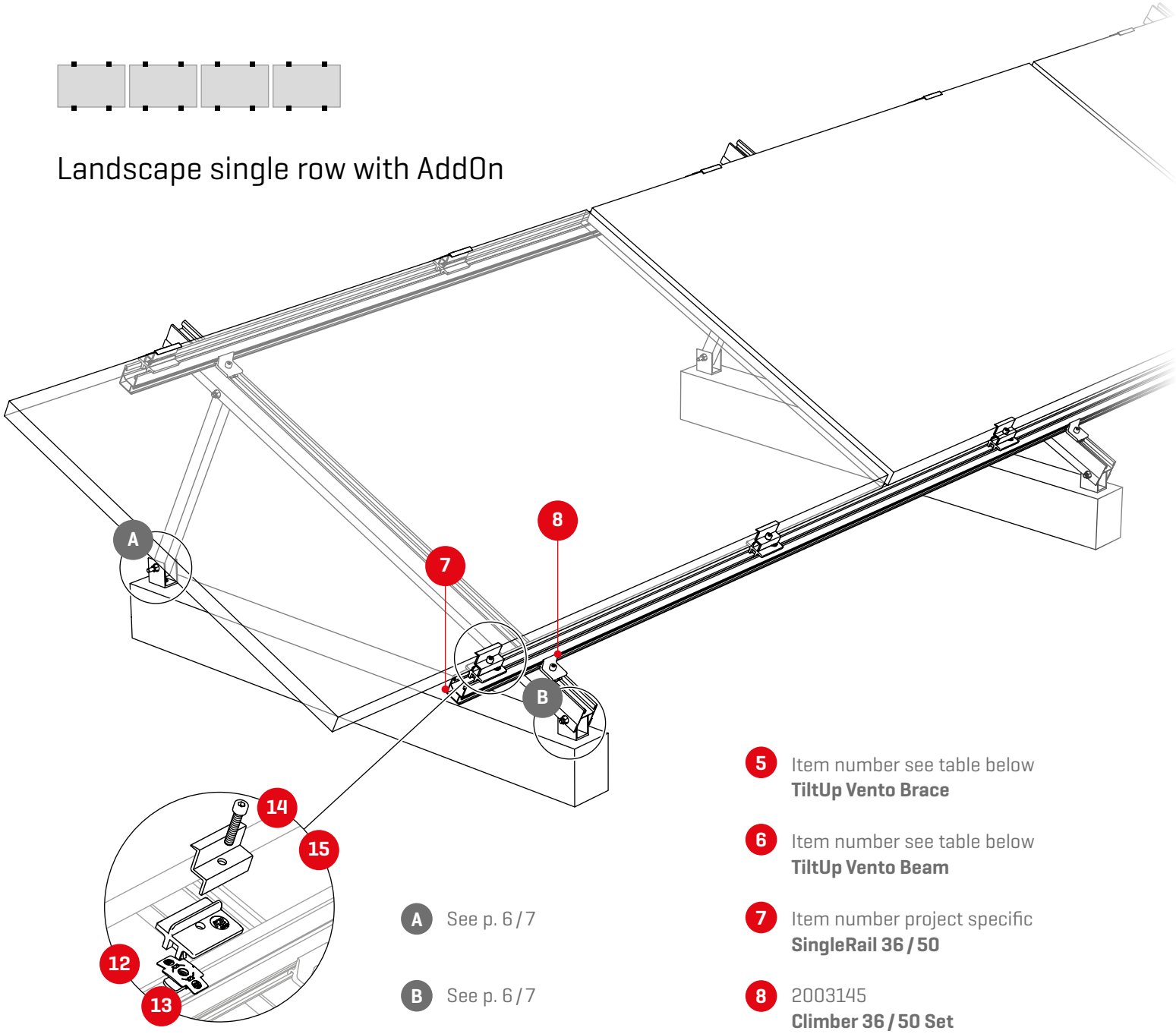

A See p. 6 / 7

B See p. 6 / 7

5 Item number see table below
TiltUp Vento Brace

6 Item number see table below
TiltUp Vento Beam

7 Item number project specific
SingleRail 36 / 50

8 2003145
Climber 36 / 50 Set

12 1001643 / 2000034



MK2

13 1005530 / 2001707

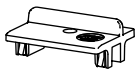

AddOn 22 / 30

14 Item number project specific

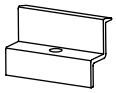

End Clamp

15 Item number project specific!



Socket head cap screw

Item numbers Brace / Beam

Module width [mm]	Inclination	TiltUp Vento Brace		TiltUp Vento Beam	
		length [mm]	Item No.	length [mm]	Item No.
950 – 1,135	20°	446	2003269	1,300	2003263
	25°	558	2003268		
	30°	679	2003267		

Landscape double row with AddOn

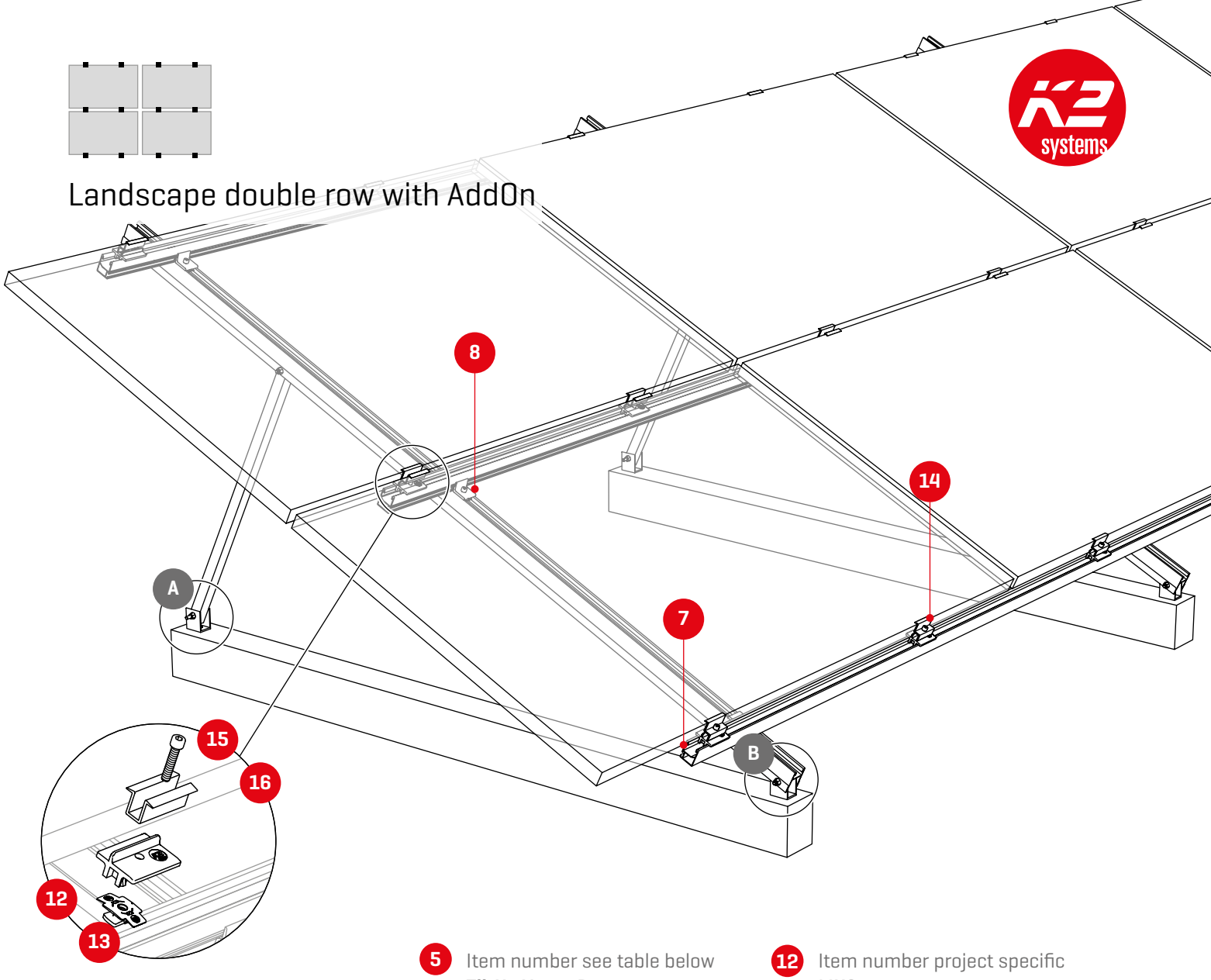

5 Item number see table below
TiltUp Vento Brace

6 Item number see table below
TiltUp Vento Beam

7 Item number project specific
SingleRail 36 / 50

8 2003145
Climber 36 / 50 Set

12 Item number project specific
MK2

13 1005530 / 2001707
AddOn 22 / 30

14 Item number project specific!
End Clamp

15 Item number project specific
Socket head cap screw

A See p. 6 / 7

B See p. 6 / 7

16 1005131

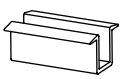

Middle Clamp

Item numbers Brace / Beam

Module width [mm]	Inclination	TiltUp Vento Brace		TiltUp Vento Beam	
		length [mm]	Item No.	length [mm]	Item No.
950 – 1,135	20°	679	2003267	2,360	2003261
	25°	856	2003266		
	30°	1,047	2003265		

Assembly dimensions and ballast

Cantilever and Span width

You can get all of the following measurements in the static report for your TiltUp Vento project.

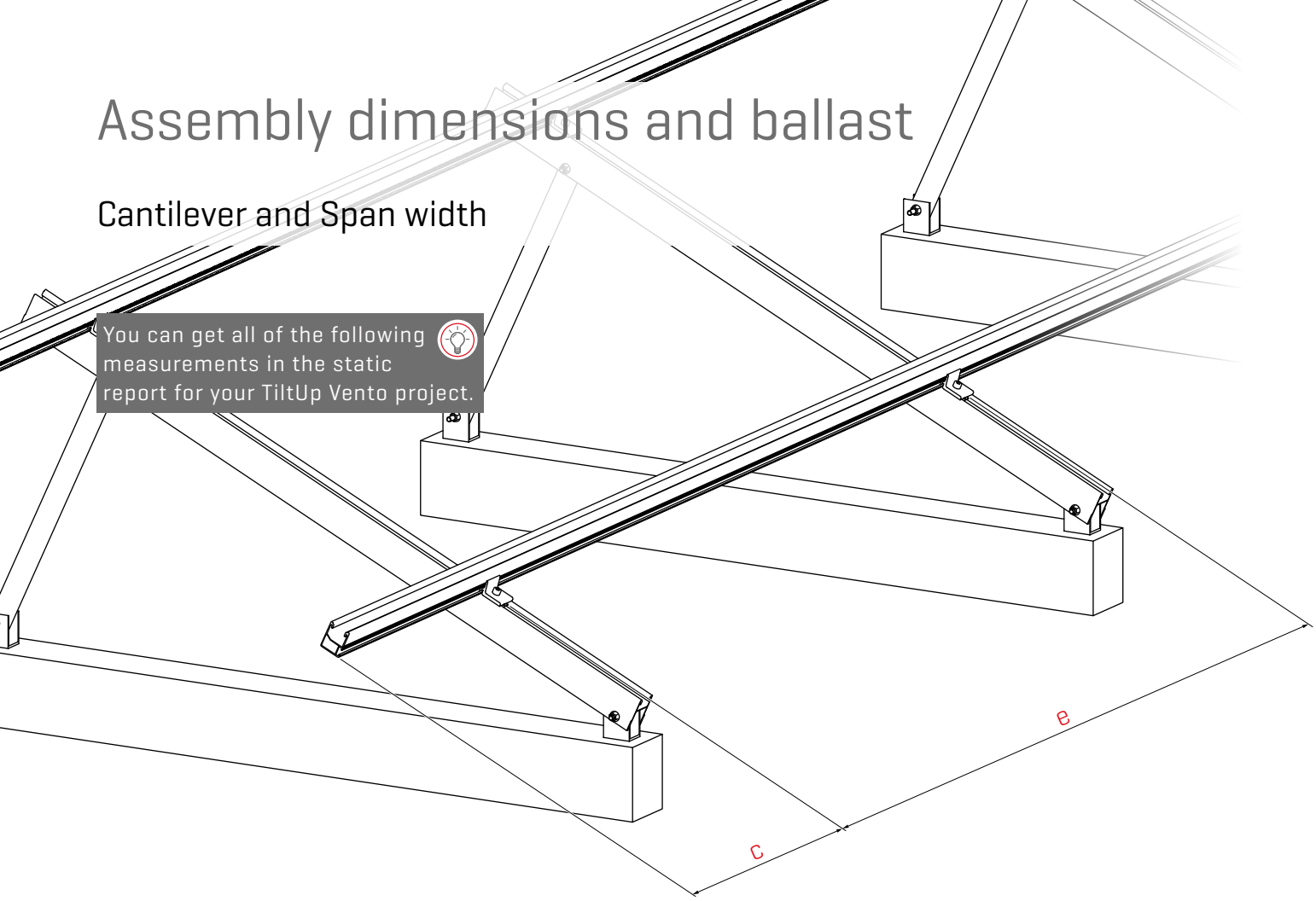

c = Cantilever
e = Span width

Module orientation: Portrait

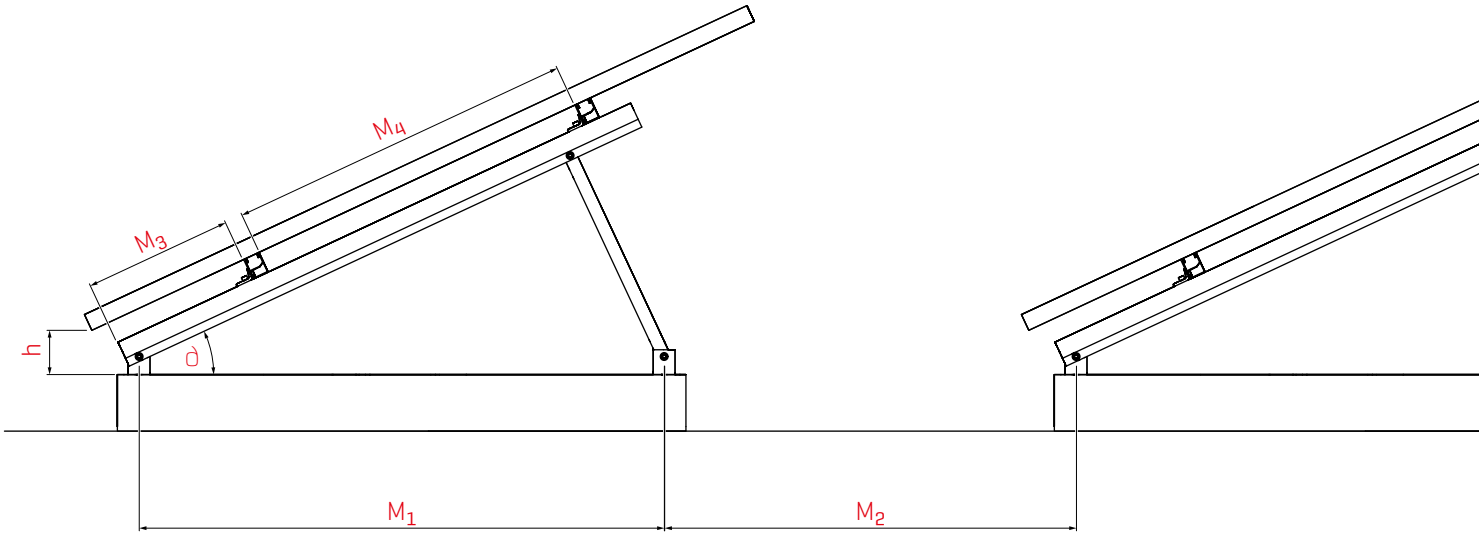

Space between ground and module under edge:
h = Variable; minimum value: 30 mm

M_L = Module longest side (Module length)

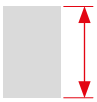

Module length	Beam length	Inclination ∂	M_1	M_3 = SingleRail 36	M_3 = SingleRail 50	M_4 =
1,386 - 1,751	1,300	20°	1,164	(0.25 × M_L) - 261	(0.25 × M_L) - 299	(0.5 × M_L) - 39
		25°	1,207	(0.25 × M_L) - 202	(0.25 × M_L) - 232	
		30°	1,262	(0.25 × M_L) - 162	(0.25 × M_L) - 187	
1,752 – 2,293	1,600	20°	1,491	(0.25 × M_L) - 261	(0.25 × M_L) - 299	(0.5 × M_L) - 39
		25°	1,488	(0.25 × M_L) - 202	(0.25 × M_L) - 232	
		30°	1,616	(0.25 × M_L) - 162	(0.25 × M_L) - 187	

All specifiactions in millimeters [mm]!

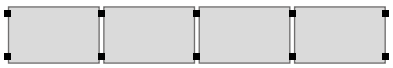

Module orientation: Landscape single row

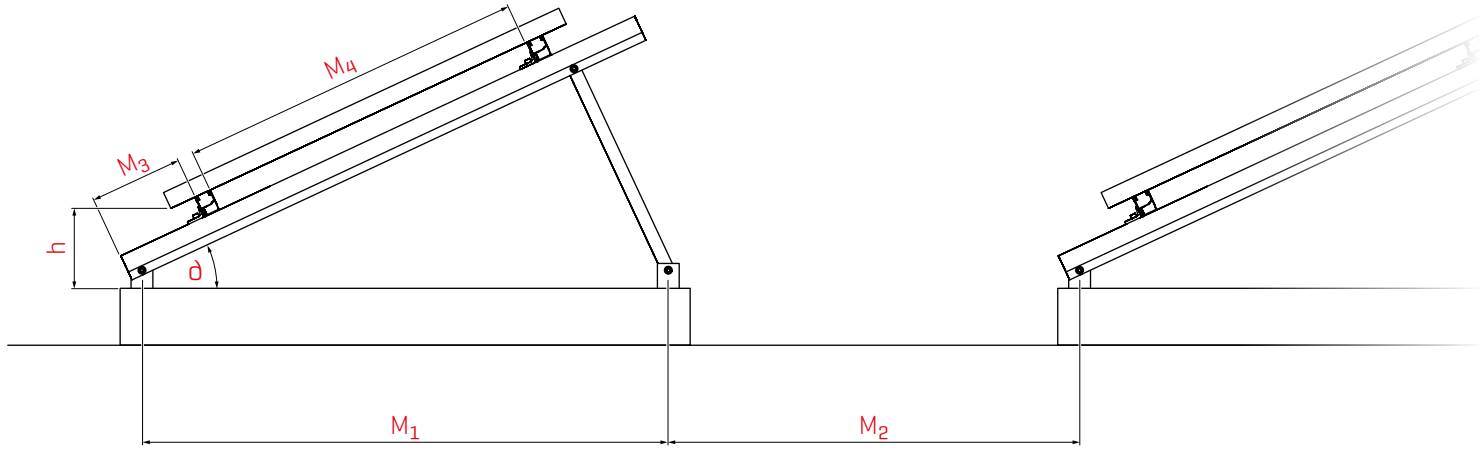

h = Space between ballast/ground and module under edge

M_w = Module shortest side



Module width	Beam length	Inclination ∂	M_1	h = SingleRail 36	h = SingleRail 50	M_3 =	M_4 =
950 - 1,135	1,300	20°	1,164	335 - (0.17 × M_w)	348 - (0.17 × M_w)	756 - (0.5 × M_w)	M_w - 289
		25°	1,207	382 - (0.21 × M_w)	395 - (0.21 × M_w)		
		30°	1,262	426 - (0.25 × M_w)	436 - (0.25 × M_w)		

All specifiactions in millimeters [mm]!

Module orientation: Landscape double row

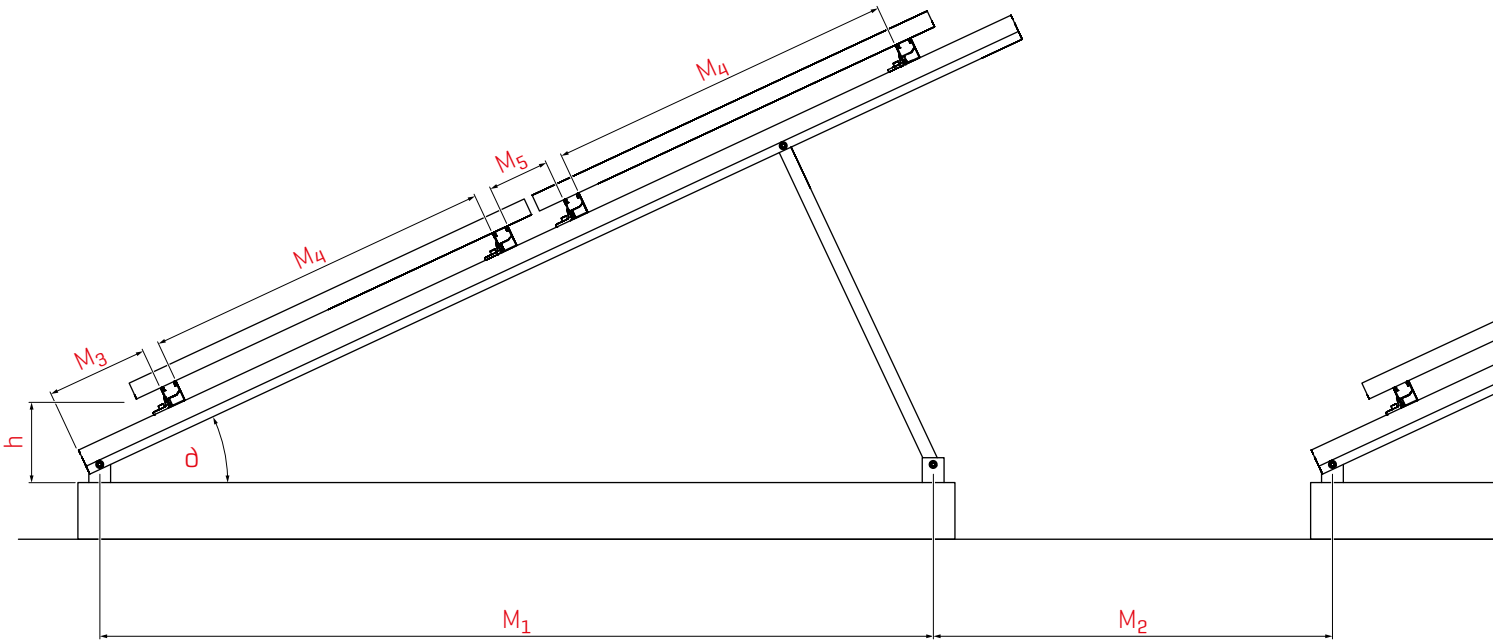

h = Space between ballast/ground and module under edge

M_w = Module shortest side

Module width	Beam length	Inclination ∂	M_1	h = SingleRail 36	h = SingleRail 50	M_3 =	M_4 =	M_5 =
950 - 1,135	2,360	20°	1,841	511 - (0.34 × M_w)	511 - (0.34 × M_w)	1,276 - M_w	M_w - 289	231
		25°	1,909	600 - (0.42 × M_w)	600 - (0.42 × M_w)			
		30°	1,998	684 - (0.50 × M_w)	684 - (0.50 × M_w)			

All specifiactions in millimeters [mm]!

Module orientation: Landscape single row with AddOn

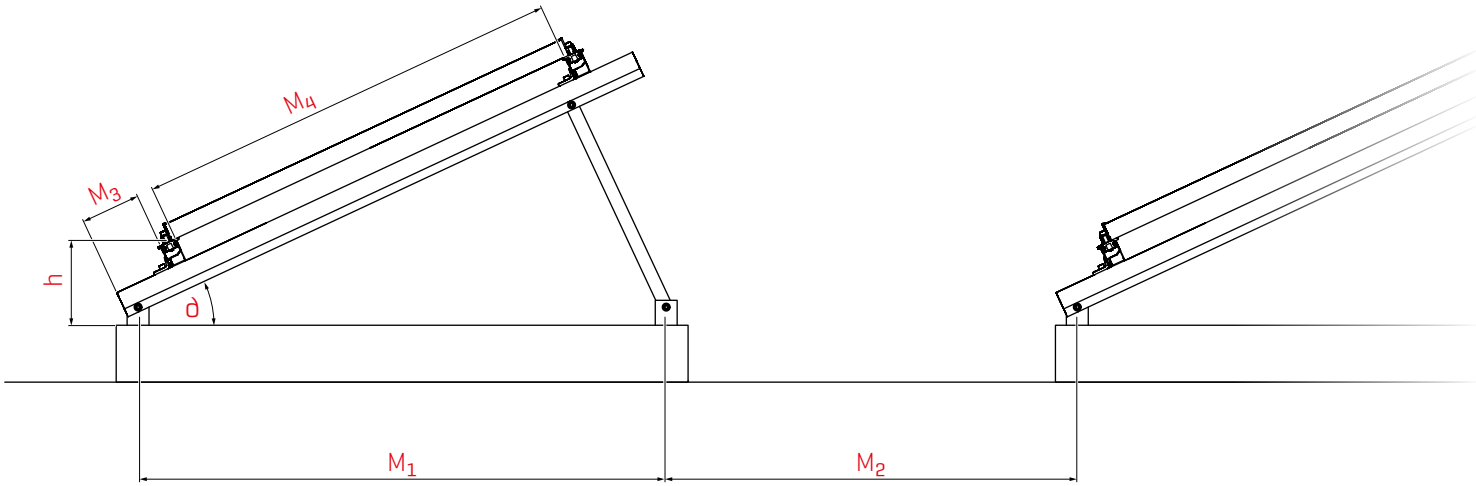

h = Space between ballast/ground and module under edge

M_w = Module shortest side

Module width	Beam length	Inclination ∂	M_1	h = SingleRail 36	h = SingleRail 50	M_3 =	M_4 =
950 - 1,135	1,300	20°	1,164	335 - (0.17 × M_w)	348 - (0.17 × M_w)	621 - (0.5 × M_w)	M_w - 19
		25°	1,207	382 - (0.21 × M_w)	395 - (0.21 × M_w)		
		30°	1,262	426 - (0.25 × M_w)	436 - (0.25 × M_w)		

All specifiactions in millimeters [mm]!

Module orientation: Landscape double row with AddOn

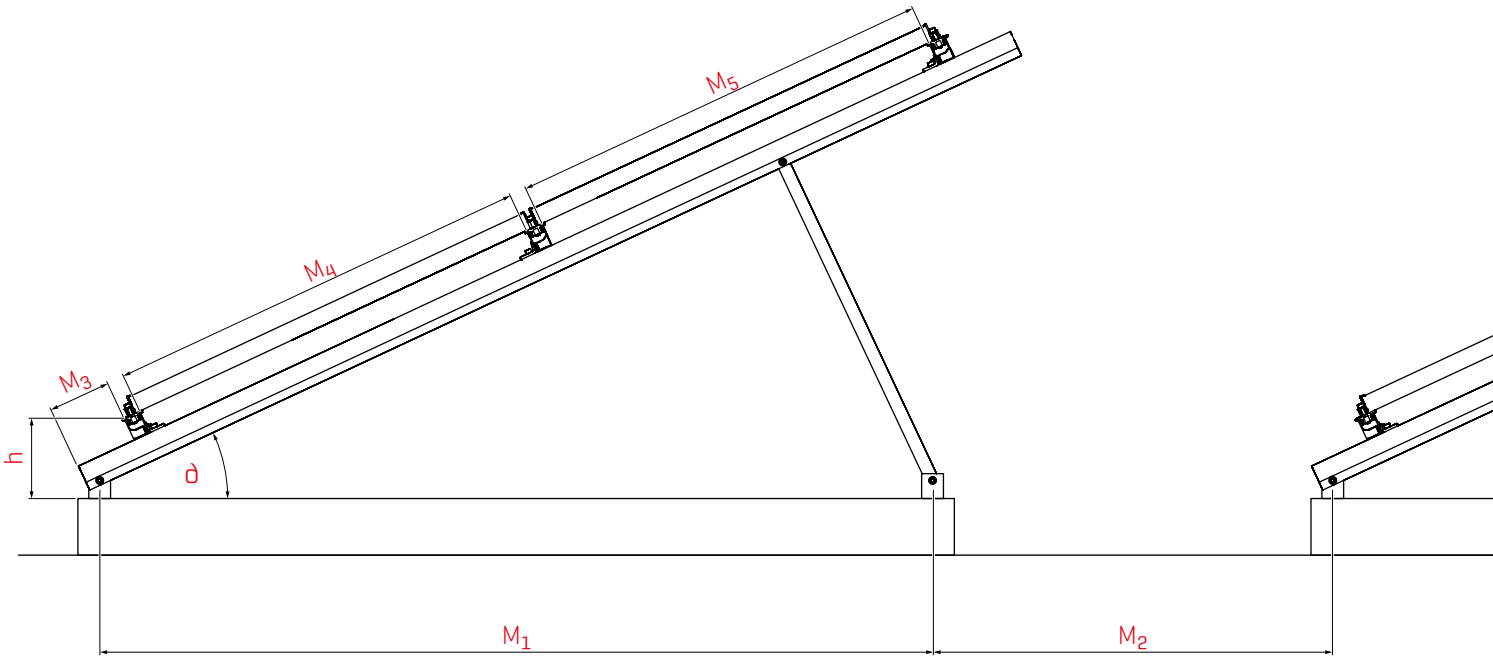

h = Space between ballast/ground and module under edge

M_w = Module shortest side

Module width	Beam length	Inclination ∂	M_1	h = SingleRail 36	h = SingleRail 50	M_3 =	M_4 =	M_5 =
950 - 1,135	2,360	20°	1,841	517 - (0.34 × M_w)	530 - (0.34 × M_w)	1,141 - M_w	M_w - 19	M_w - 19
		25°	1,909	605 - (0.42 × M_w)	618 - (0.42 × M_w)			
		30°	1,998	689 - (0.50 × M_w)	701 - (0.50 × M_w)			

All specifiactions in millimeters [mm]!

Ballast scheme: Naming and allocation

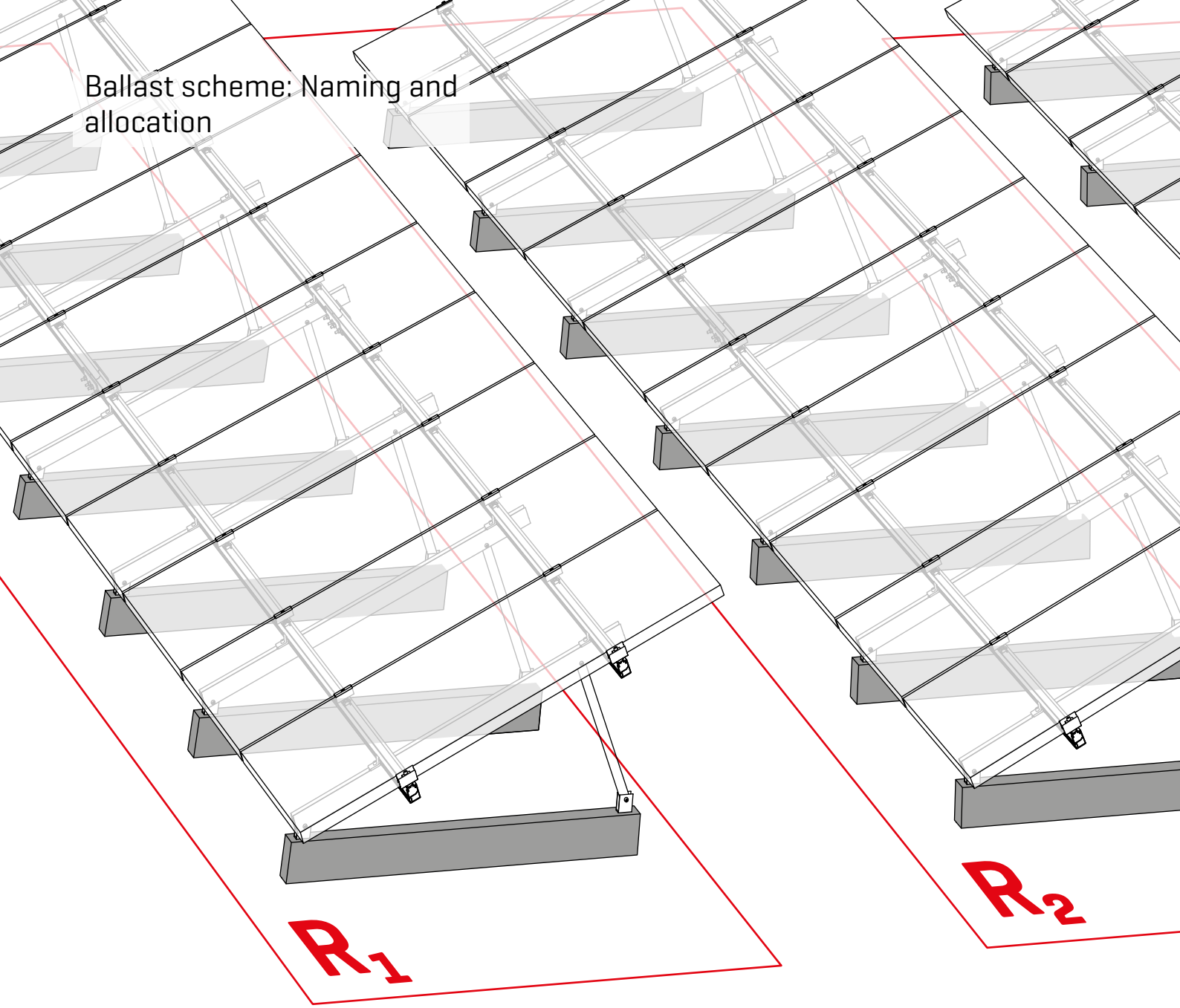

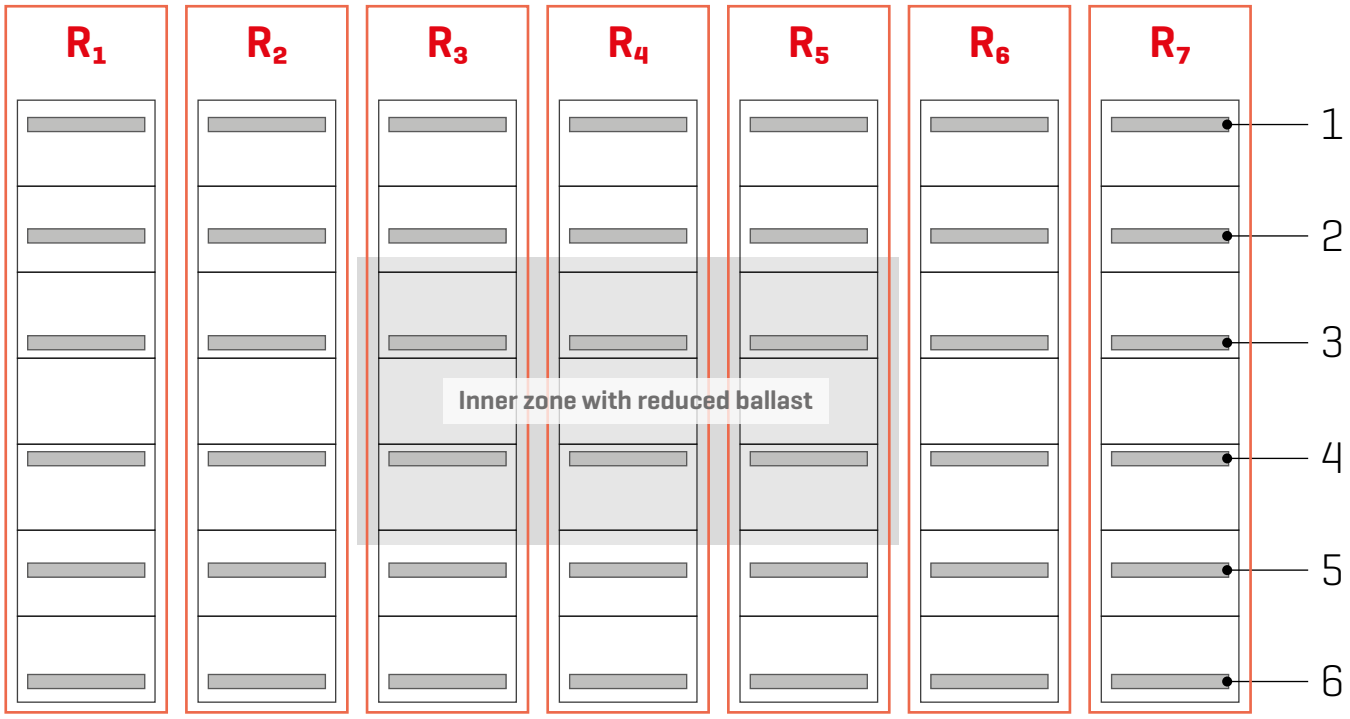

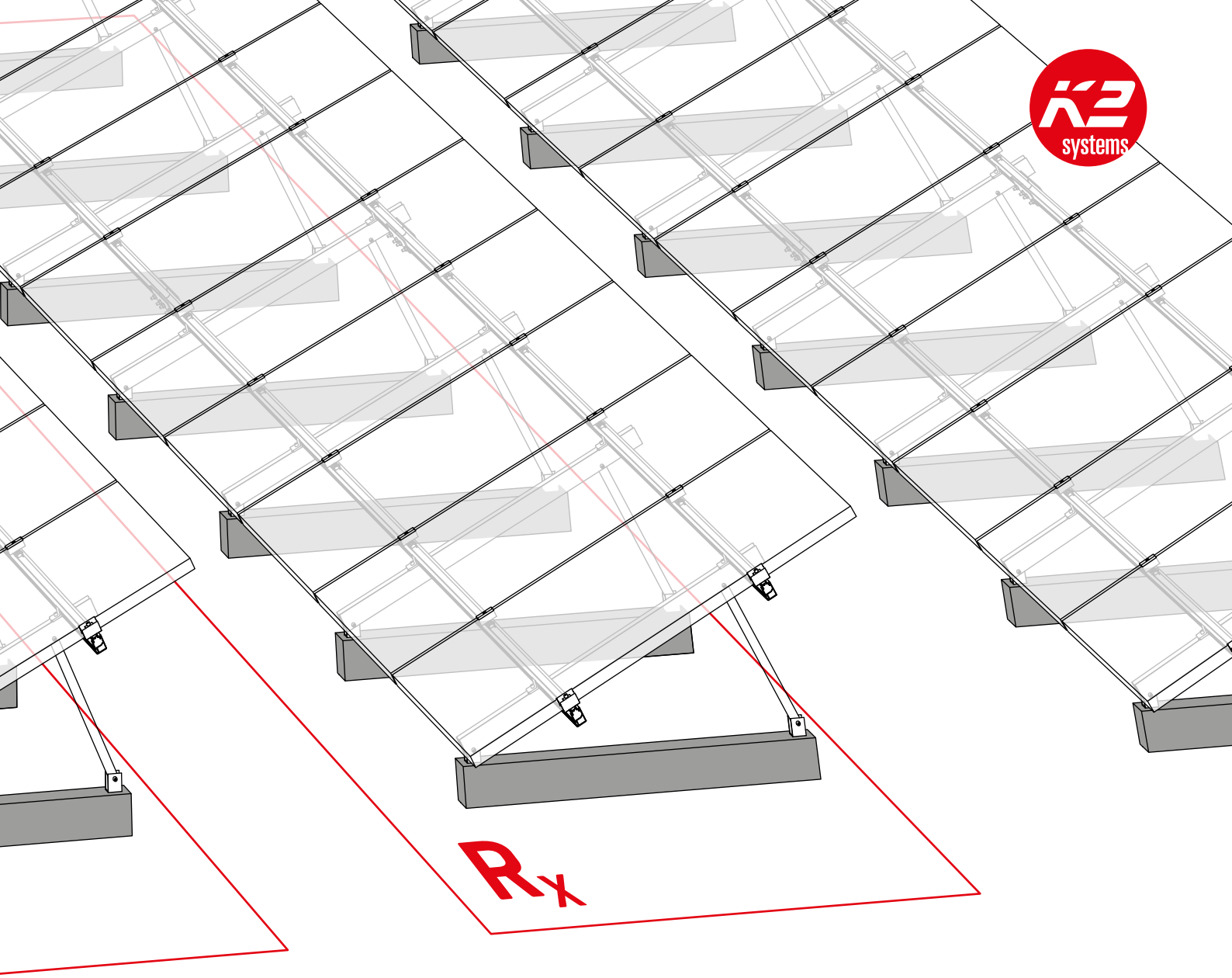

Report on the static calculation

You will receive a report from K2 Systems for each TiltUp Vento project. This includes a static analysis and tells you how the calculated ballastings are to be distributed in the module field and the individual module blocks.

The following table shows an example of ballast distribution. The row labels refer to the module rows and the columns to the respective ballast position.

Example: Table ballast distribution from static calculation report

Weight per ballast element	Module row						
	R_1	R_2	R_3	R_4	R_5	R_6	R_7
1	146.0	146.0	146.0	146.0	146.0	146.0	146.0
2	146.0	146.0	146.0	146.0	146.0	146.0	146.0
3	146.0	146.0	6.2	6.2	6.2	146.0	146.0
4	146.0	146.0	6.2	6.2	6.2	146.0	146.0
5	146.0	146.0	146.0	146.0	146.0	146.0	146.0
6	146.0	146.0	146.0	146.0	146.0	146.0	146.0

All figures in kilograms [kg]!

Assembly

Basic steps

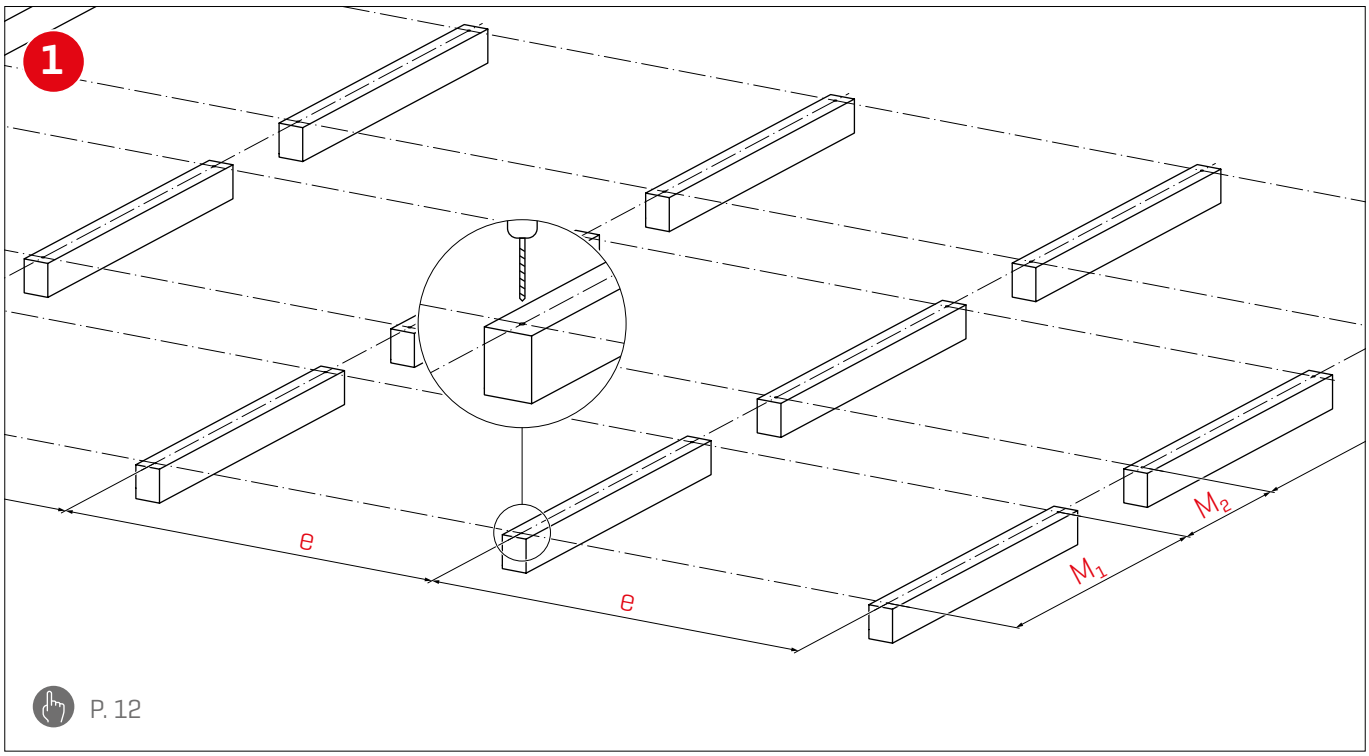

P. 12

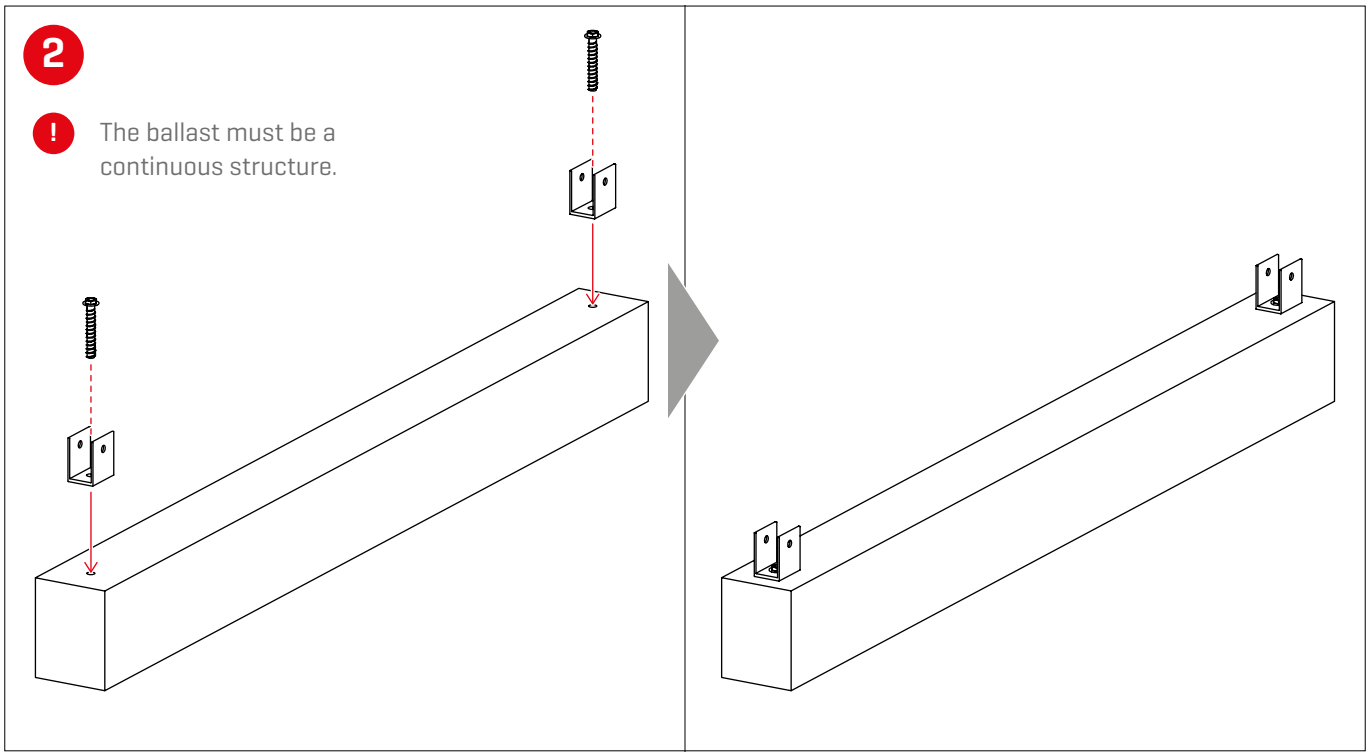

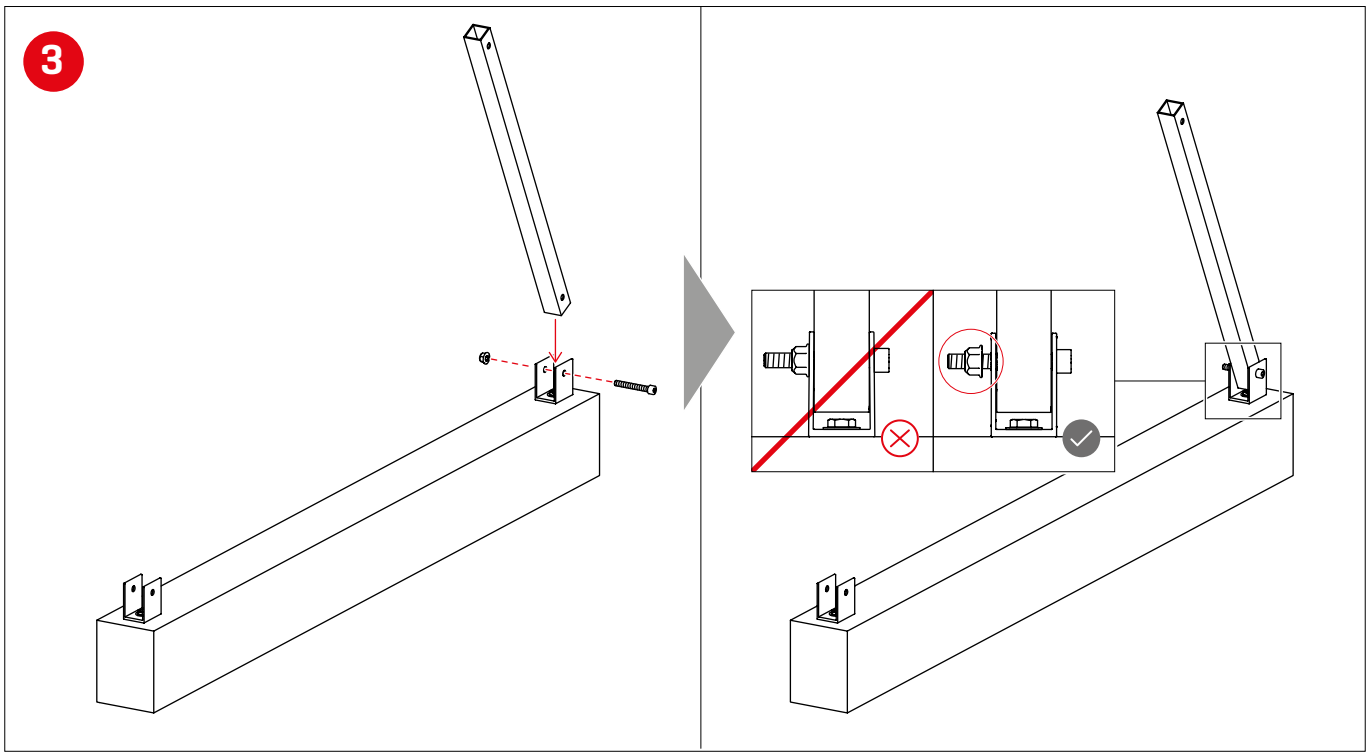
3

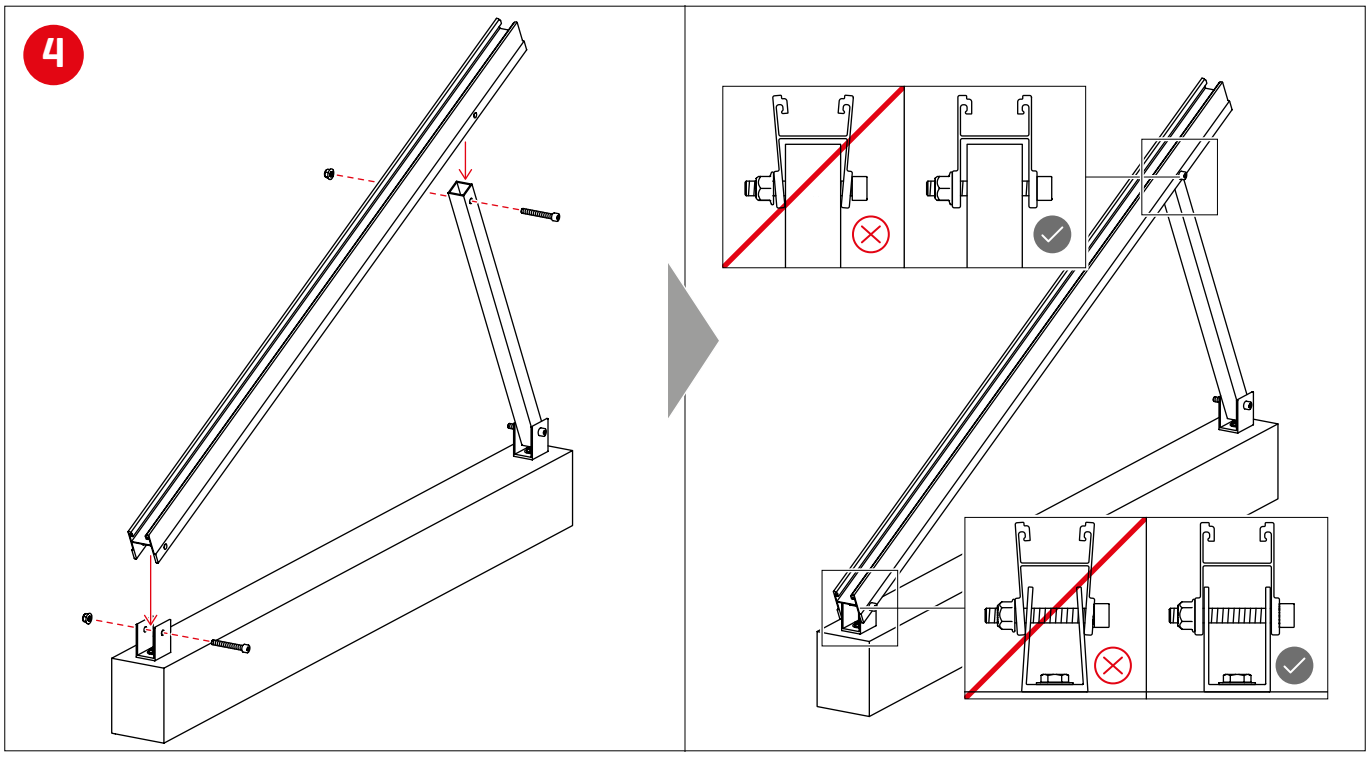
4

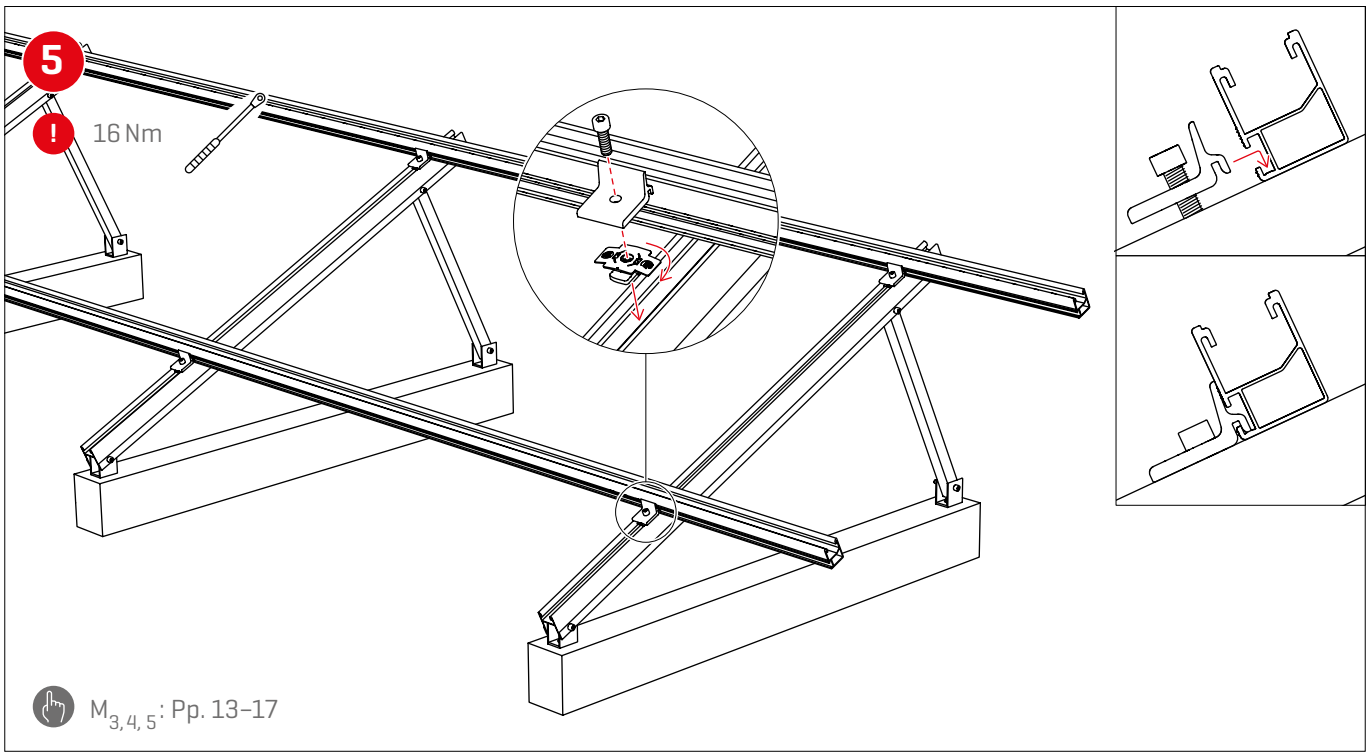
5
16 Nm
M3, 4, 5: Pp. 13–17

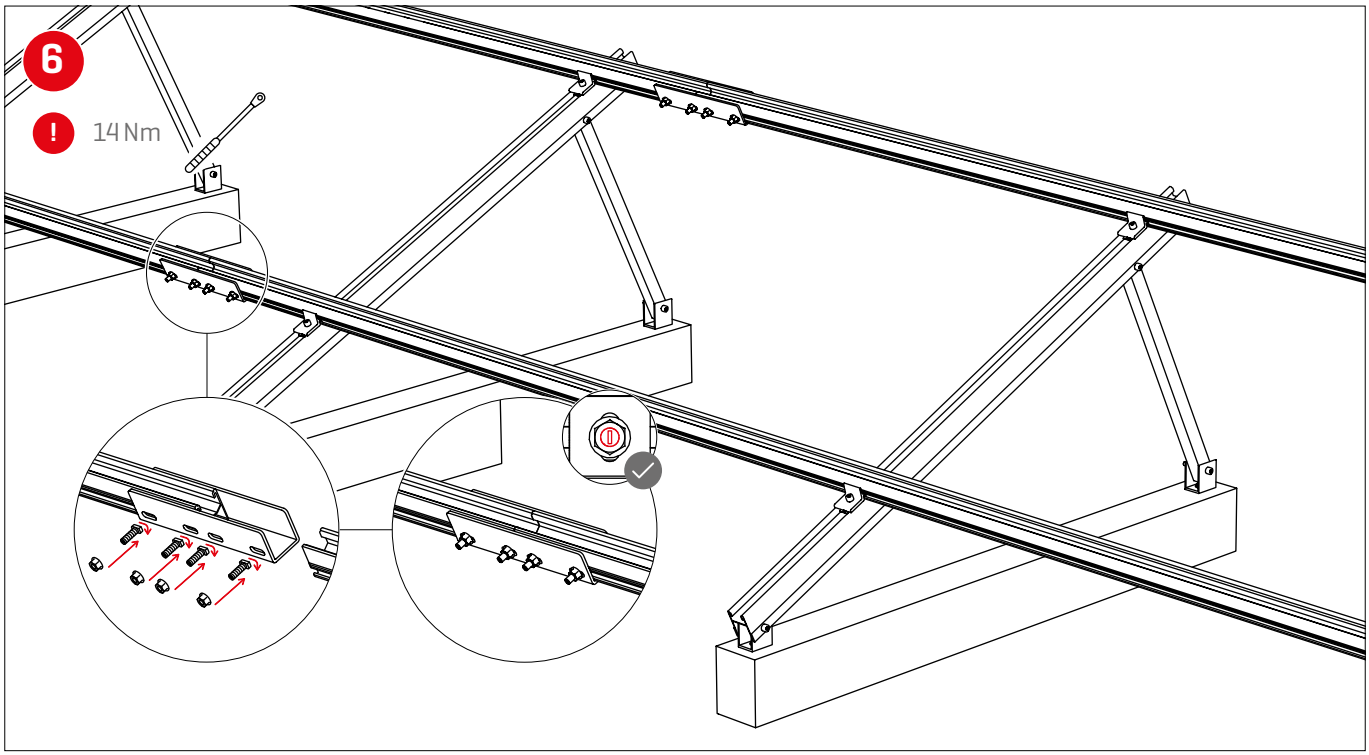
6
14 Nm

Portrait assembly

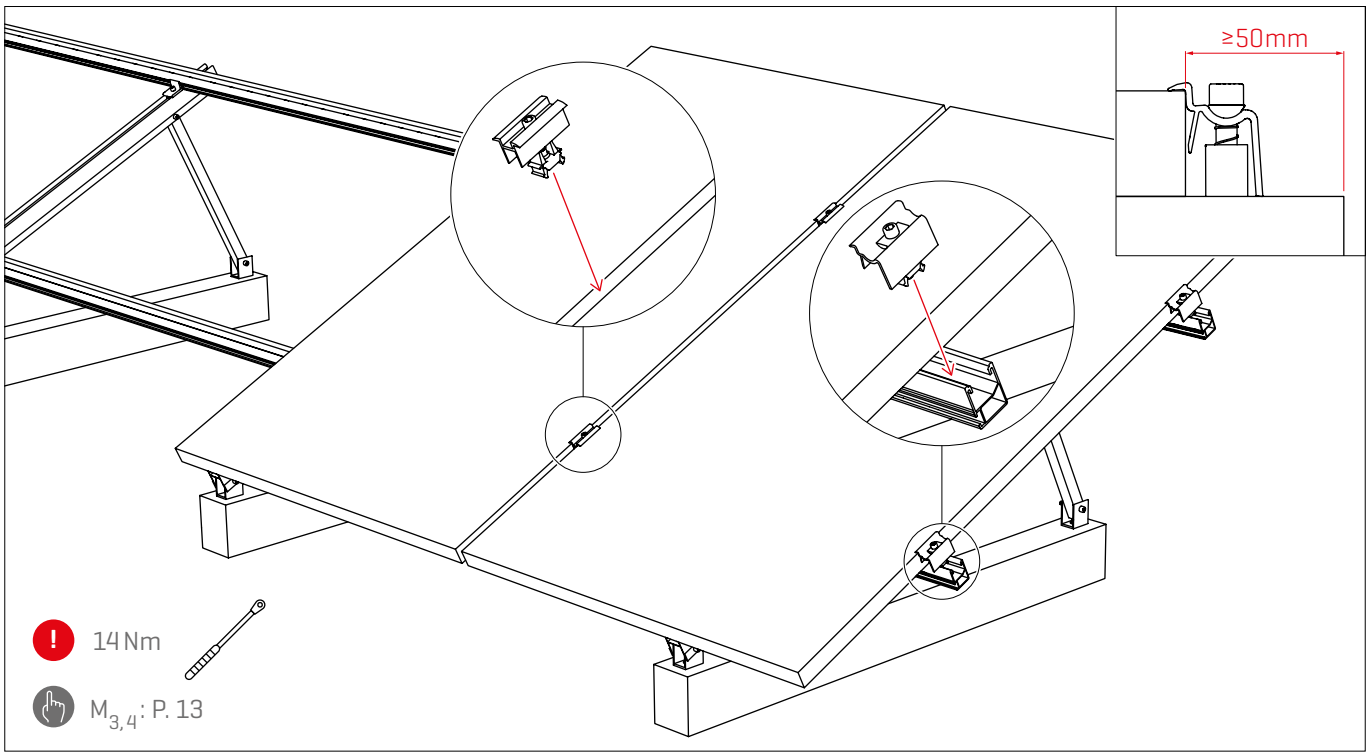

Landscape assembly, single row

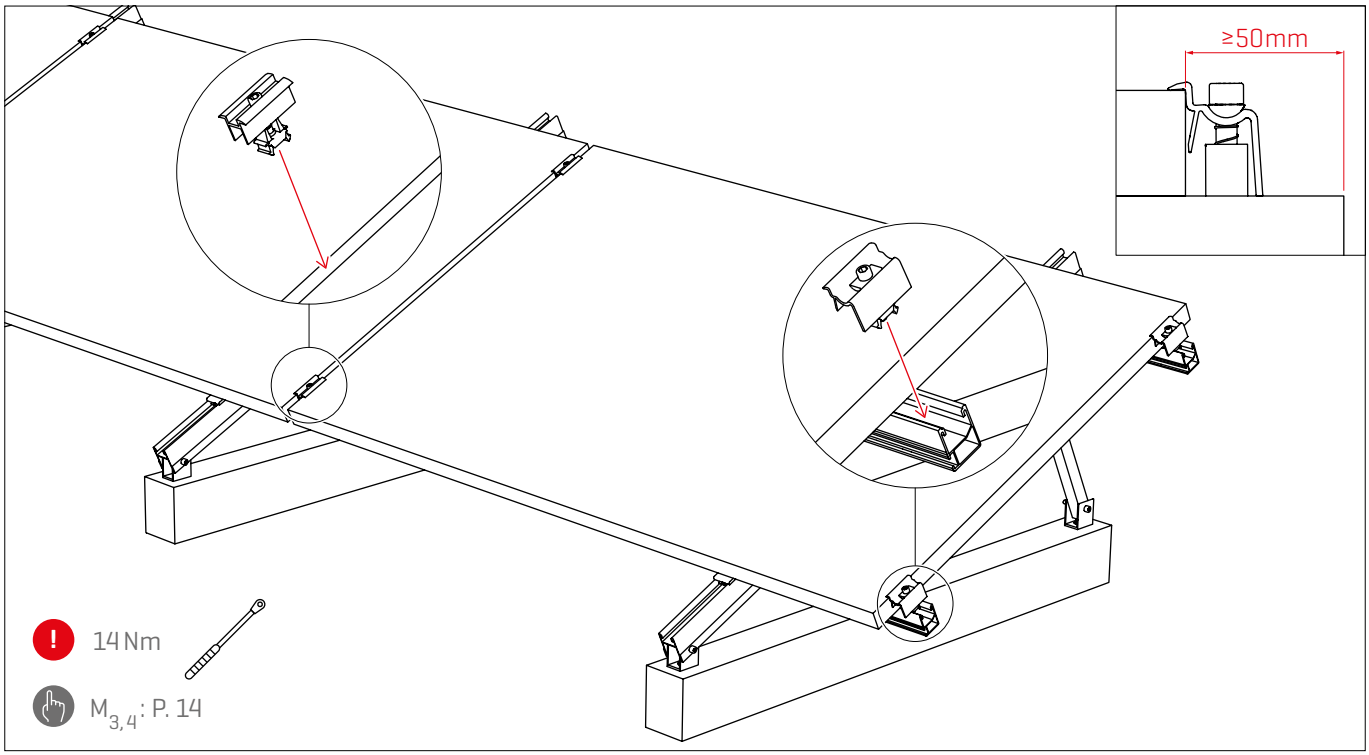

Landscape assembly, double row

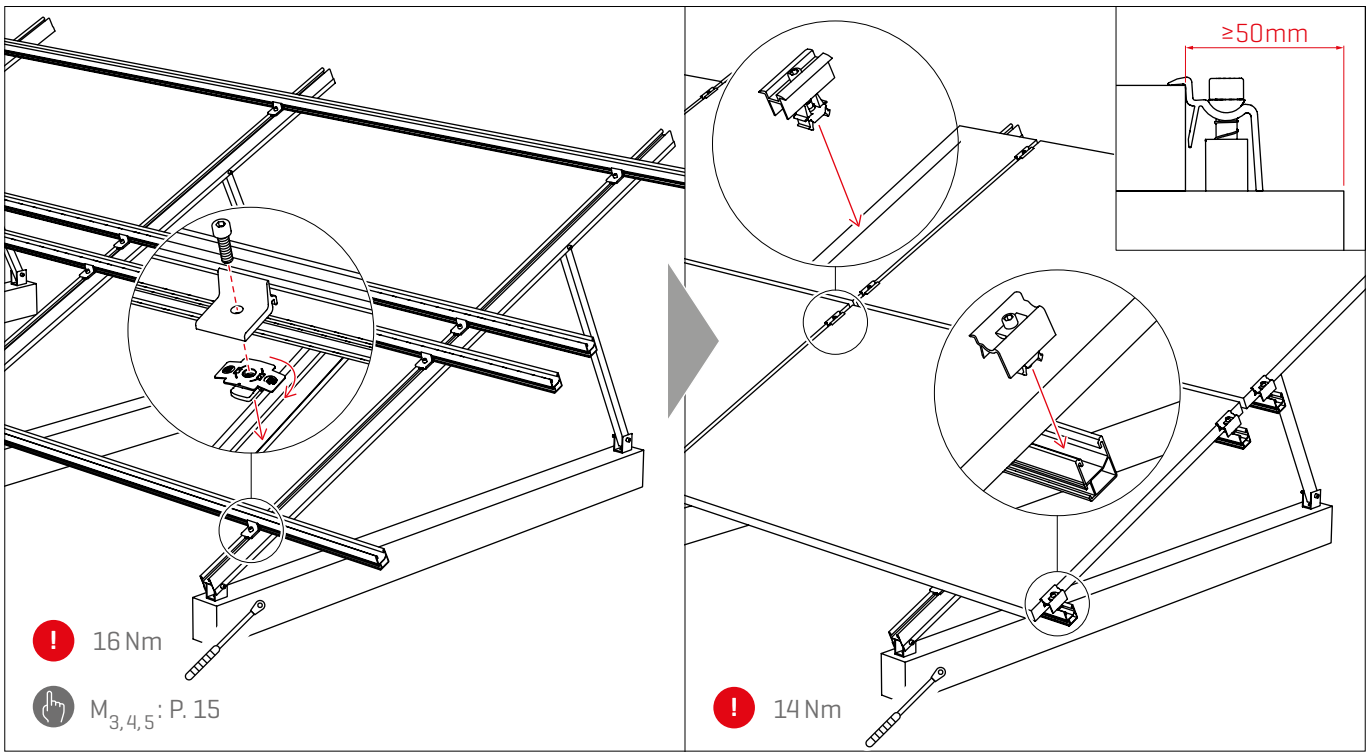

Landscape assembly, single row with AddOn

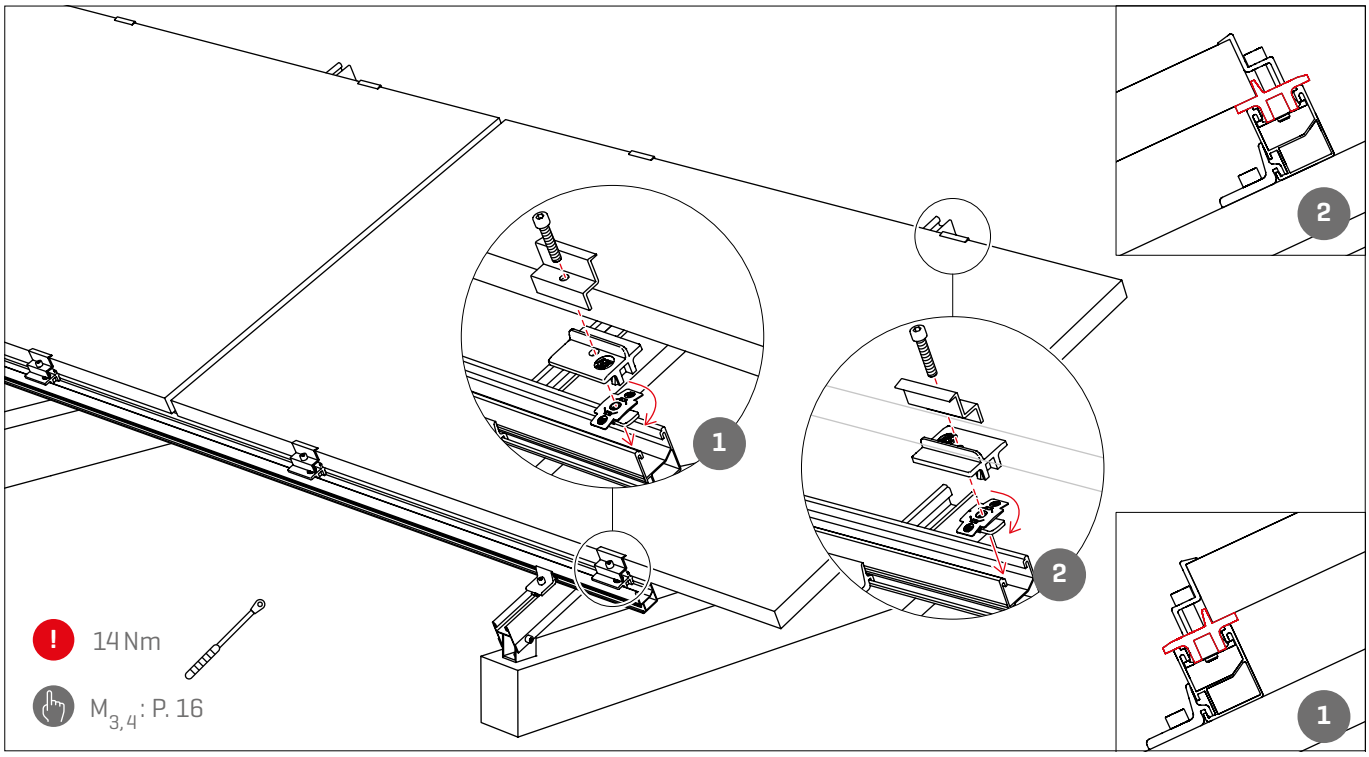

Landscape assembly, double row with AddOn

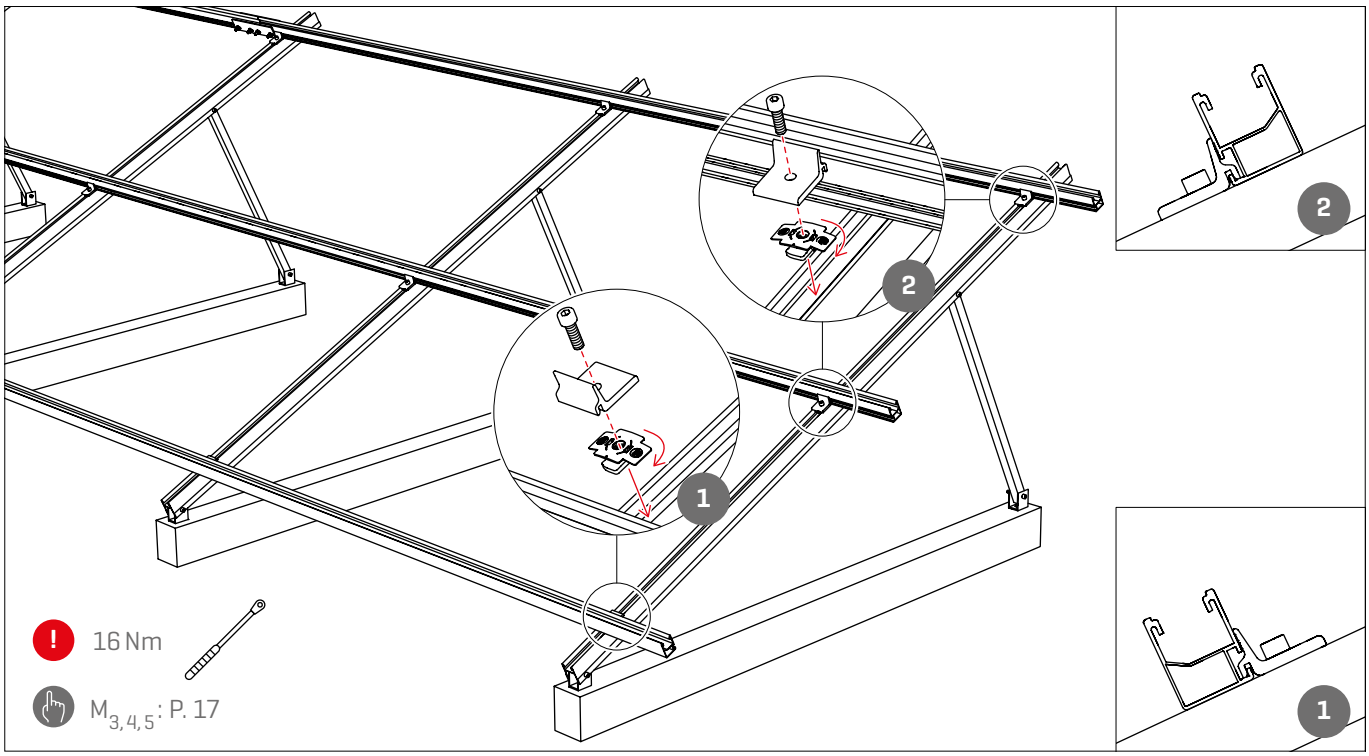

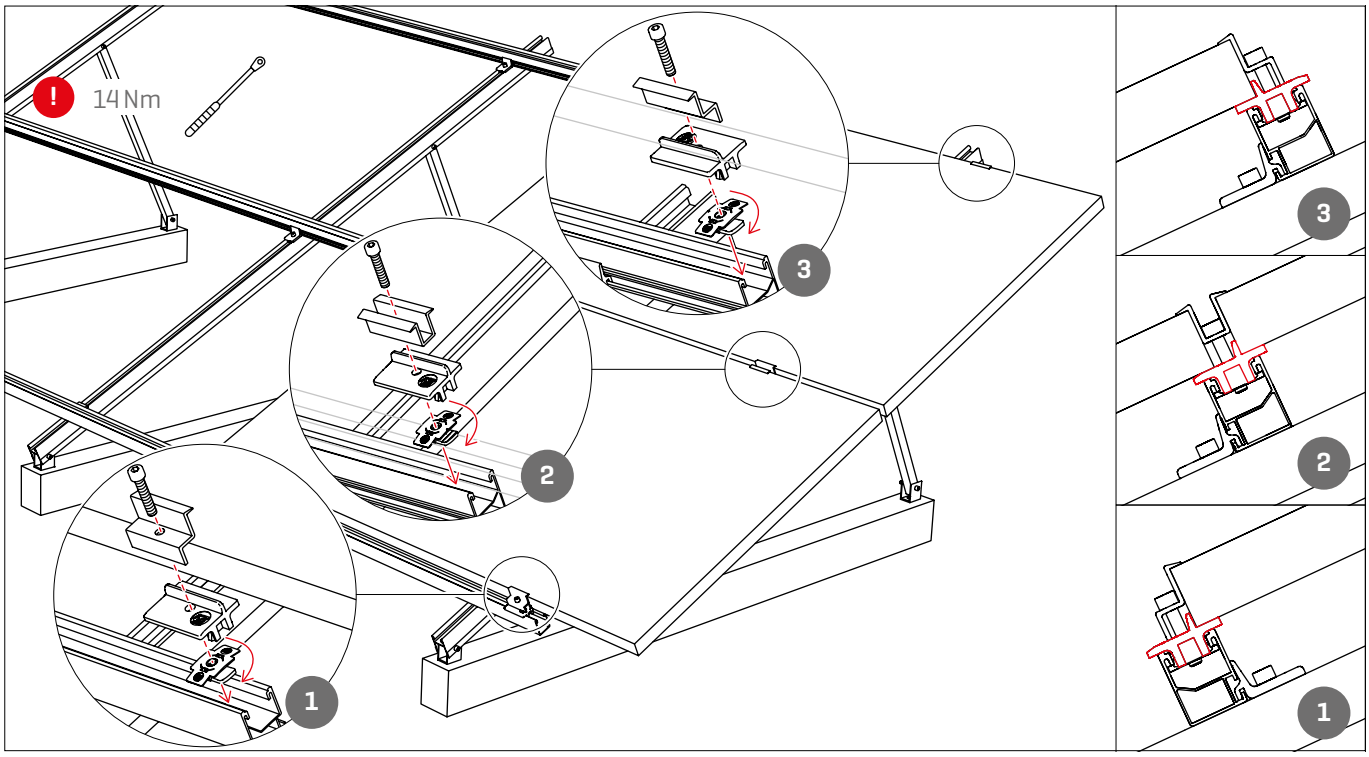

Notes

We support PV systems

Thank you for choosing a K2 mounting system.

Systems from K2 Systems are quick and easy to install. We hope these instructions have helped. Please contact us with any questions or suggestions for improvement.
Our contact data:

- **k2-systems.com/en/contact**
- **Service Hotline: +49 (0)7159 42059-0**

Our General Terms of Business apply. Please refer:
k2-systems.com

K2 Systems GmbH

Industriestraße 18
71272 Renningen
Germany

+49 (0) 7159 - 42059 - 0
info@k2-systems.com
www.k2-systems.com