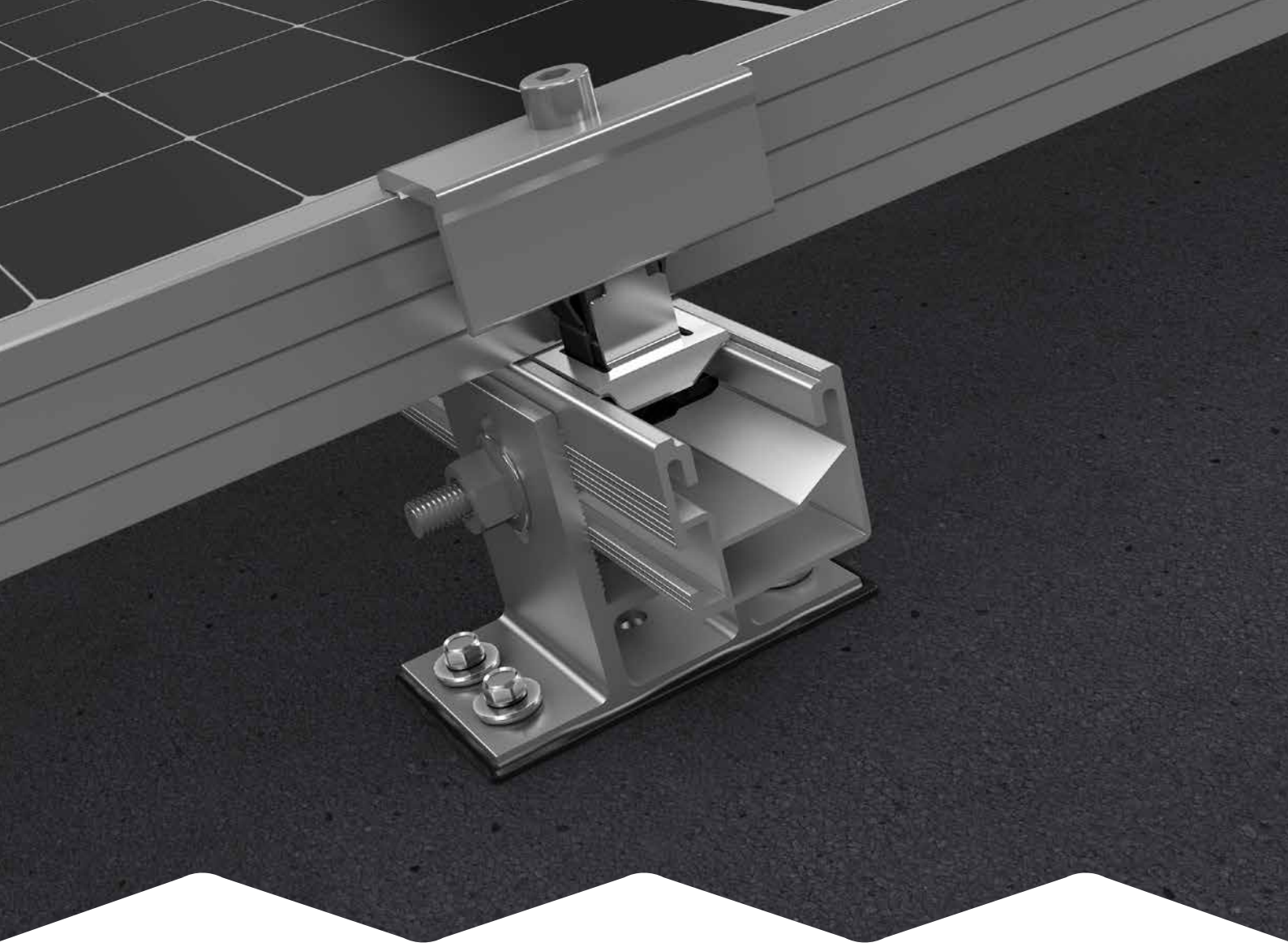

Assembly Manual

SingleRail System

with SpliceFoot

Connecting Strength

k2-systems.com

Content

- **Tools overview** 3
- **General safety information** 4
- **The following guidelines apply** 5
  - · Planning with K2 Base 5
  - · Roof requirements 5
  - · Structural requirements 5
  - · Important mounting instructions 5
- **Components** 6
- **Assembly** 8
  - · Deck attachment 8
  - · Rafter attachment 9
- **Module frame earthing with TerraGrif** 13
  - · TerraGrif QL oder K2SZ 13
- **Notes** 14

Quality tested - several certifications

K2 Systems stands for secure connections, highest quality and precision. Our customers and business partners have known that for a long time. Independent institutes have tested, confirmed and certified our capabilities and components.

Please find our quality and product certificates under:
k2-systems.com

Tools overview

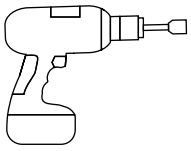

SW 8 mm SW 13 mm 6 mm

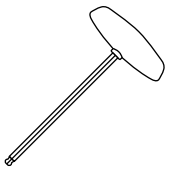

6 mm



6 - 30 Nm (4.5 - 22.2 lb-ft) 6 mm



SW 13 mm

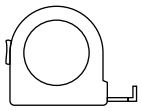

≥ 3.0 m



≥ 6.0 m

Digital Toolbox



Do you already know our digital services? Use our K2 Roof Check App now and record the first important data directly at the customer or project site.
Simply transfer the data to our online planning software K2 Base. Here you can plan your project easily, safely and quickly. You receive a detailed project report with assembly plan and static report.
The K2+ interface enables seamless project data transfer to the planning tools of other manufacturers. With the K2 DocuApp, project documentation is done quickly and easily - without annoying paperwork.

Get started and register now:

docuapp.k2-systems.com

base.k2-systems.com

General safety information

Please note that our general mounting instructions must be followed at all times and can be viewed online at k2-systems.com.

- The equipment may only be installed and operated by qualified and adequately trained installers.
- Prior to installation, ensure that the product complies with on-site static loading requirements.
  For roof-mounted systems, the roof load-bearing capacity must always be checked.
- National and local building regulations and environmental requirements must be adhered to.
- Compliance with health and safety regulations, accident prevention guidelines and applicable standards is required.
  - Protective equipment such as safety helmet, boots and gloves must be worn.
  - Roofing works must be in accordance with roofing regulations utilising fall protection safeguards when eaves height exceeds 3 m.
  - At least two people must be present for the duration of the installation work in order to provide rapid assistance in the event of an emergency.
- K2 mounting systems are continuously developed and improved and the installation process may thereby change at any time. Prior to installation consult our website at k2-systems.com for up-to-date instructions.
  We can send you the latest version on request.
- The assembly instructions of the module manufacturer must be adhered to.
- Equipotential bonding/grounding/earthing between individual parts is to be performed according to country specific standards, as well as national laws and regulations.
- At least one copy of the assembly instructions should be available on site throughout the duration of the installation.
- Failure to adhere to our general safety and assembly instructions and not using all system components, K2 is not liable for any resulting defects or damages. We do not accept liability for any damage resulting in the use of competitor's parts. Warranty is excluded in such cases.
- German law shall apply excluding the UN Convention on CISG. Place of venue is Stuttgart. Our General Terms of Business apply.
- If all safety instructions are adhered to and the system is correctly installed, there is a product warranty entitlement of 12 years! We strongly recommend reviewing our terms of guarantee, which can be viewed at k2-systems.com.
  We will also send this information on request.
- Dismantling of the system is performed in reverse order to the assembly.
- K2 stainless steel components are available in different corrosion resistance classes. Each structure or component must be carefully checked for possible corrosion exposure.

The following guidelines apply

The SingleRail system with SpliceFoot can be used without further testing by K2 Systems in the following standard conditions. The system is also suitable for higher requirements. However, if a value exceeds the standard conditions, please contact K2 Systems.

Planning with K2 Base

We recommend our free online software K2 Base for the planning. In five steps, you can plan the right assembly system and get a construction recommendation, parts list and the structural analysis report. Simply register and start planning:
base.k2-systems.com

Roof requirements

- Bitumen sheets and Bitumen shingles
- Roof pitch regularly: 5 - 75°
- Minimum thickness for deck attachment ≥ 18 mm for OSB and ≥ 21 mm for solid wood
- Deck attachment: The resistance values are based on wood material quality of C20 (> 330 kg/m²) or for OSB ≥ 550 kg/m²
- Rafter attachment: The resistance values are based on wood material quality of C24 (> 350 kg/m²)

Structural requirements

- Sufficient holding force of the roof covering on the support or substructure
- The static verification of components is automatically calculated for each location using our Base planning software

Important mounting instructions

- On-site general standards and regulations for lightning protection must be observed and consultation with a specialist to create a lightning protection concept is recommended (use lightning protection clamp if necessary).
- We recommend a thermal separation after maximum of 15 m.
- A minimum mounting distance of 50 mm from the end of the rail / rail joint to the module frame.
- Tightening torque for module clamps
  16 Nm K2 Clamp EC/MC
  14 Nm OneEnd/OneMid
- Adhere to module manufacturer recommendations for clamping area and module installation (see module manufacturer instructions).
- Do not step on the SpliceFoot or rails, as these are not climbing assists!

Components

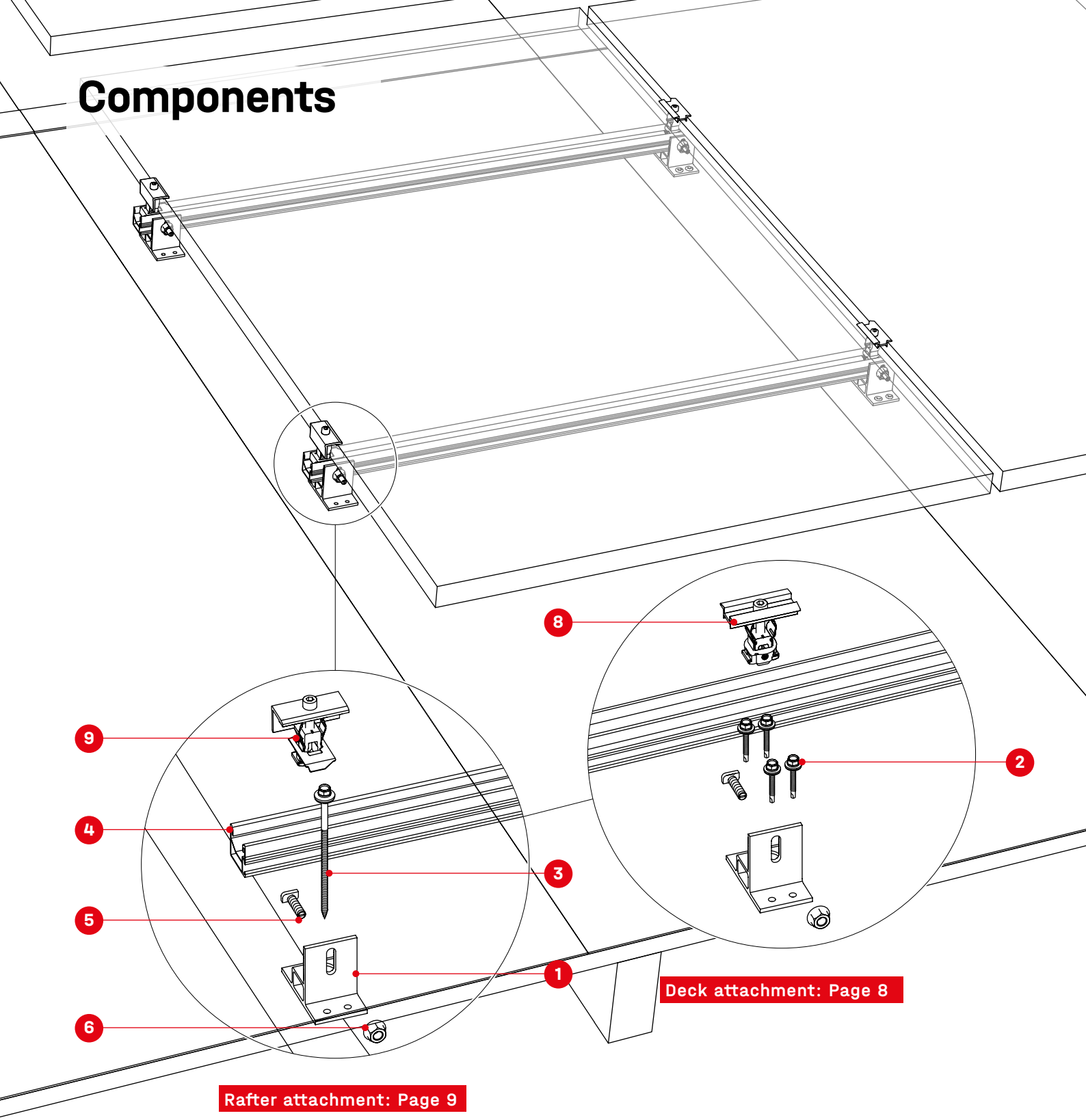

1 2003393

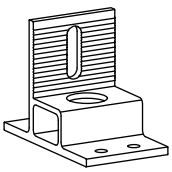

SpliceFoot

2 1001622



Drilling screw 6 × 35

3 2003527



Drilling screw 6,8 × 140

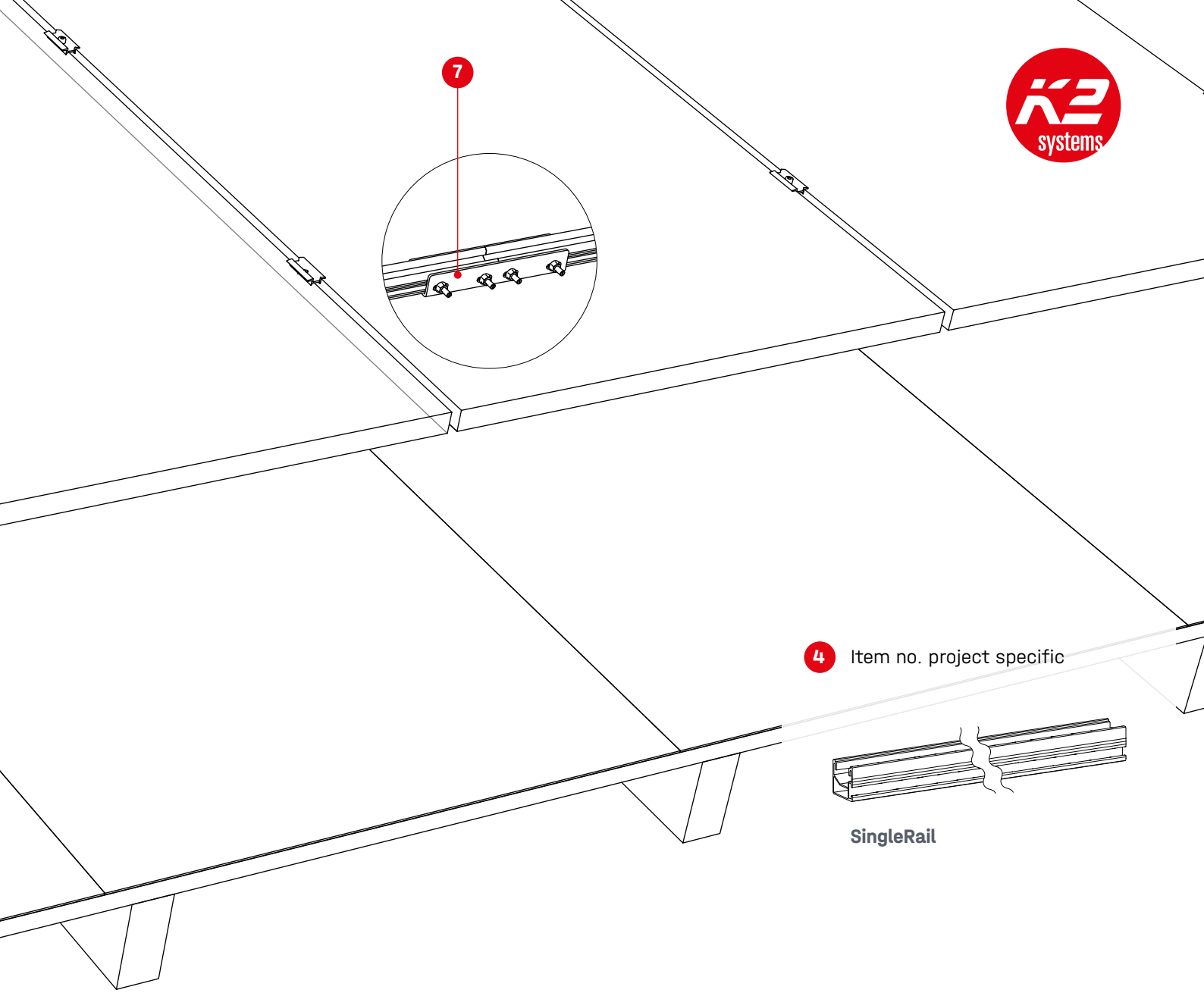

4 Item no. project specific

SingleRail

5 1002387



T-Bolt 20/12

6 1000043



Hexagon Flange nut with serration M 8

7 2001976

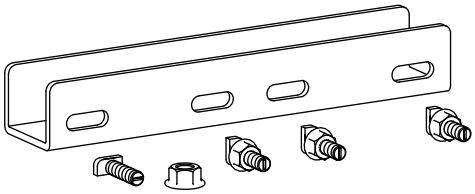

Rail connector Set

Optional

8 2004146 / 2004148

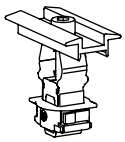

K2 Clamp MC 25 - 40
silver/black

2003071 / 2003072

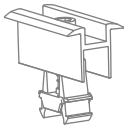

OneMid
silver/black

9 2004147 / 2004149

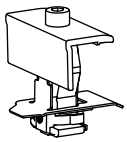

K2 Clamp EC 25 - 37
silver/black

2002514 / 2002589



OneEnd
silver/black

2004231



TerraGrif QL

2001881



TerraGrif K2SZ

Assembly

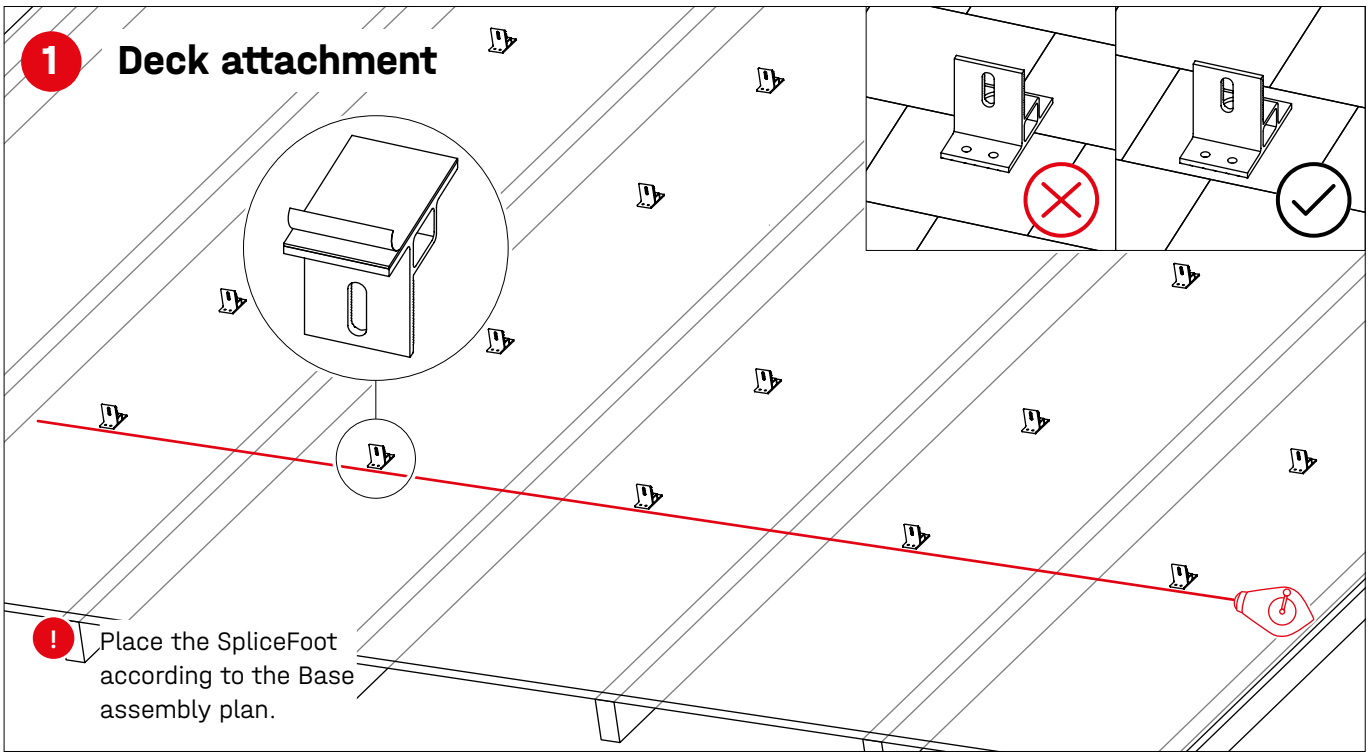
1
Deck attachment
!
Place the SpliceFoot according to the Base assembly plan.

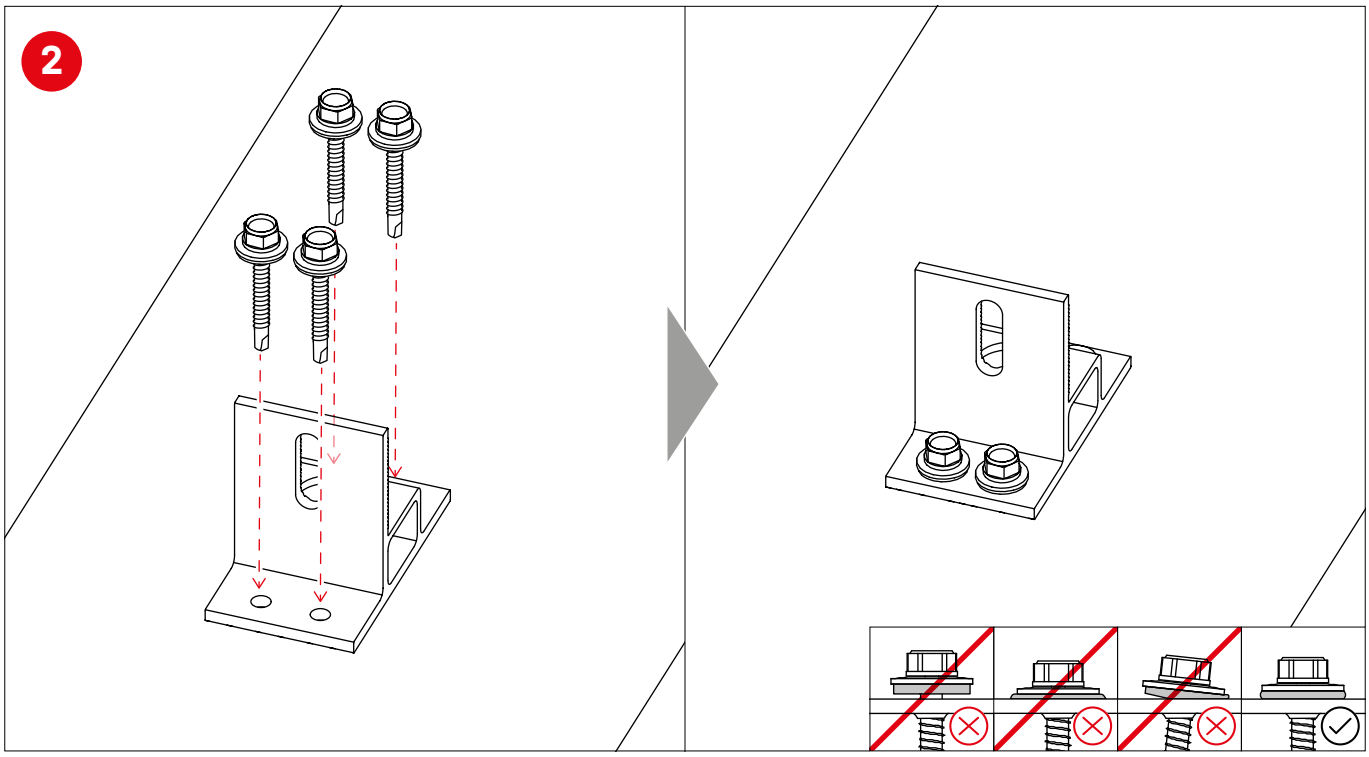
2

1 Rafter attachment

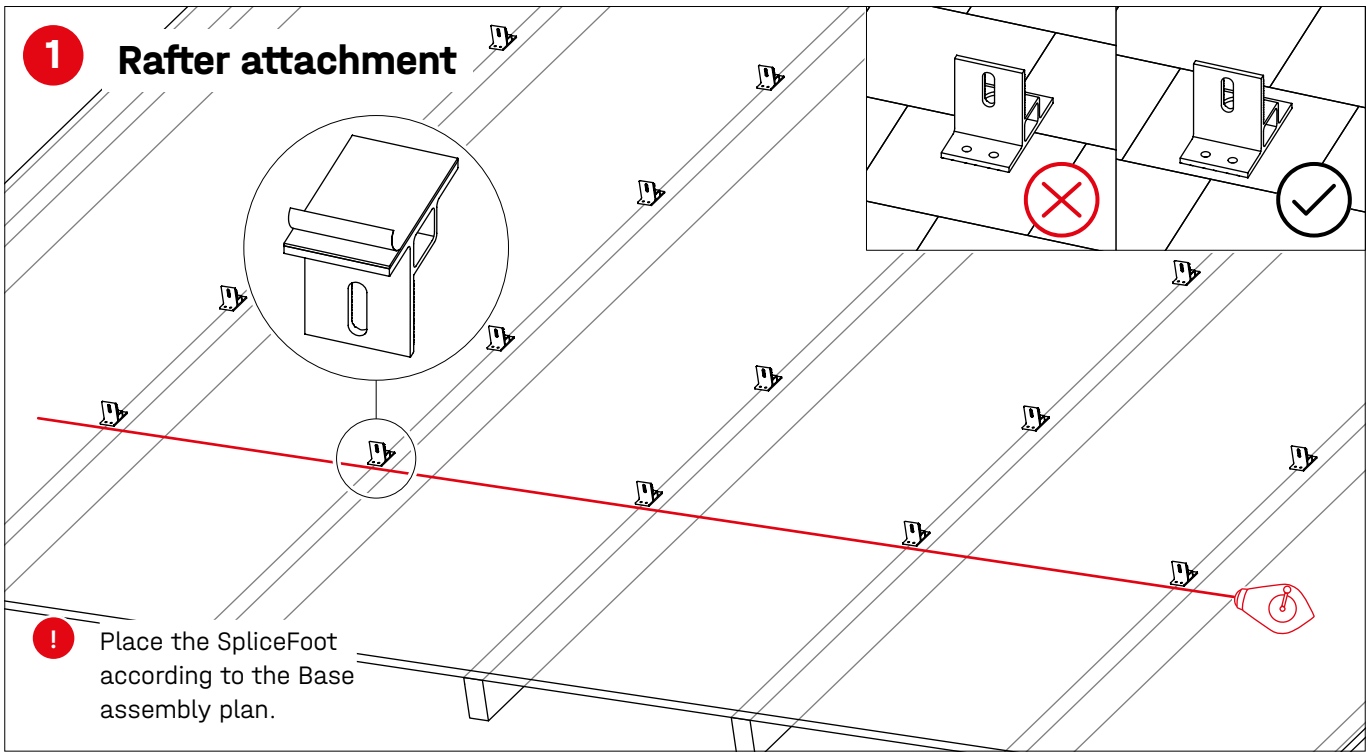

! Place the SpliceFoot according to the Base assembly plan.

2

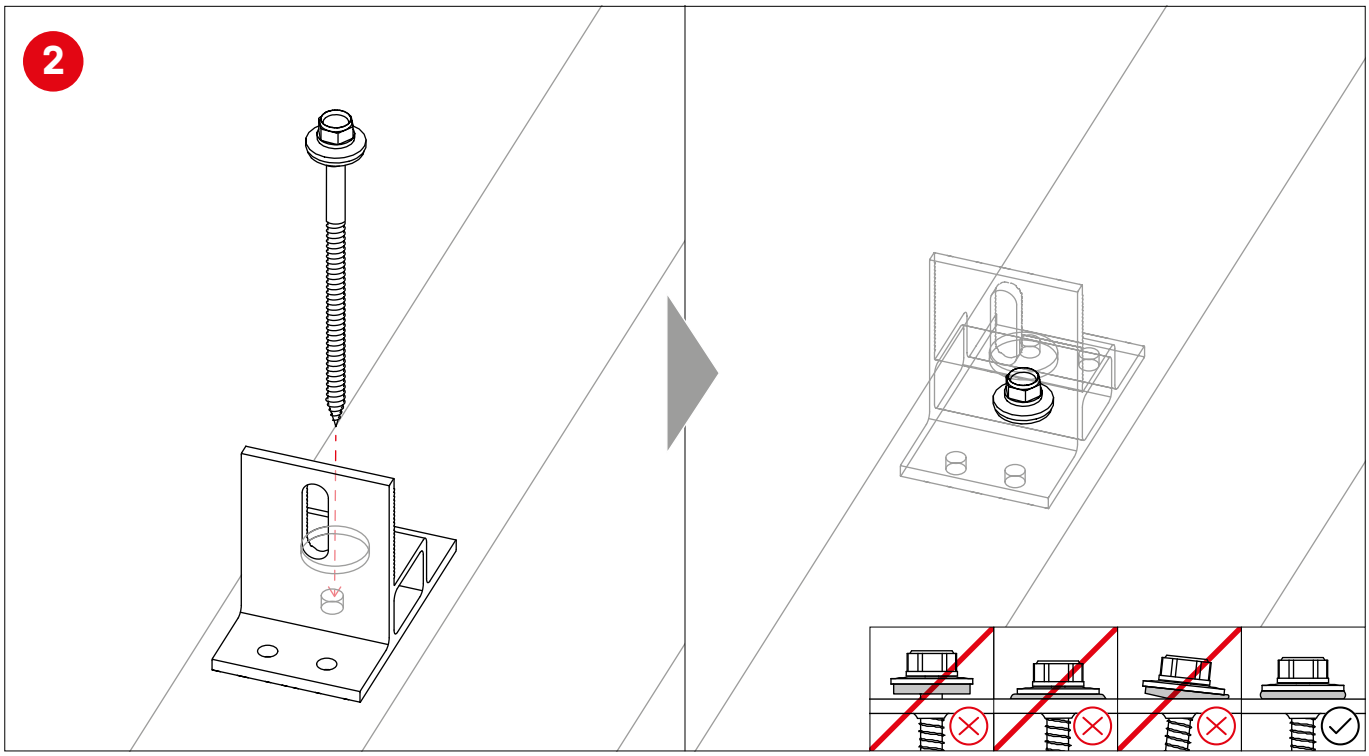

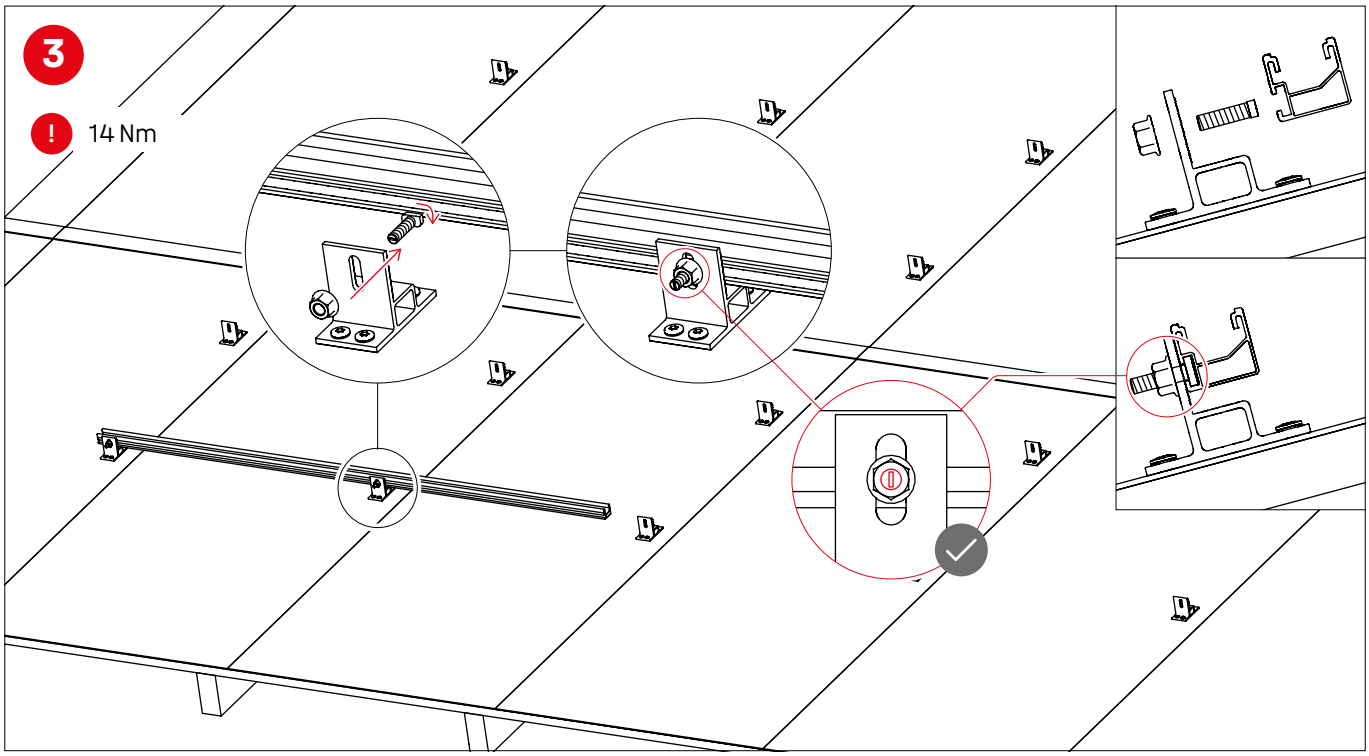
3
14 Nm

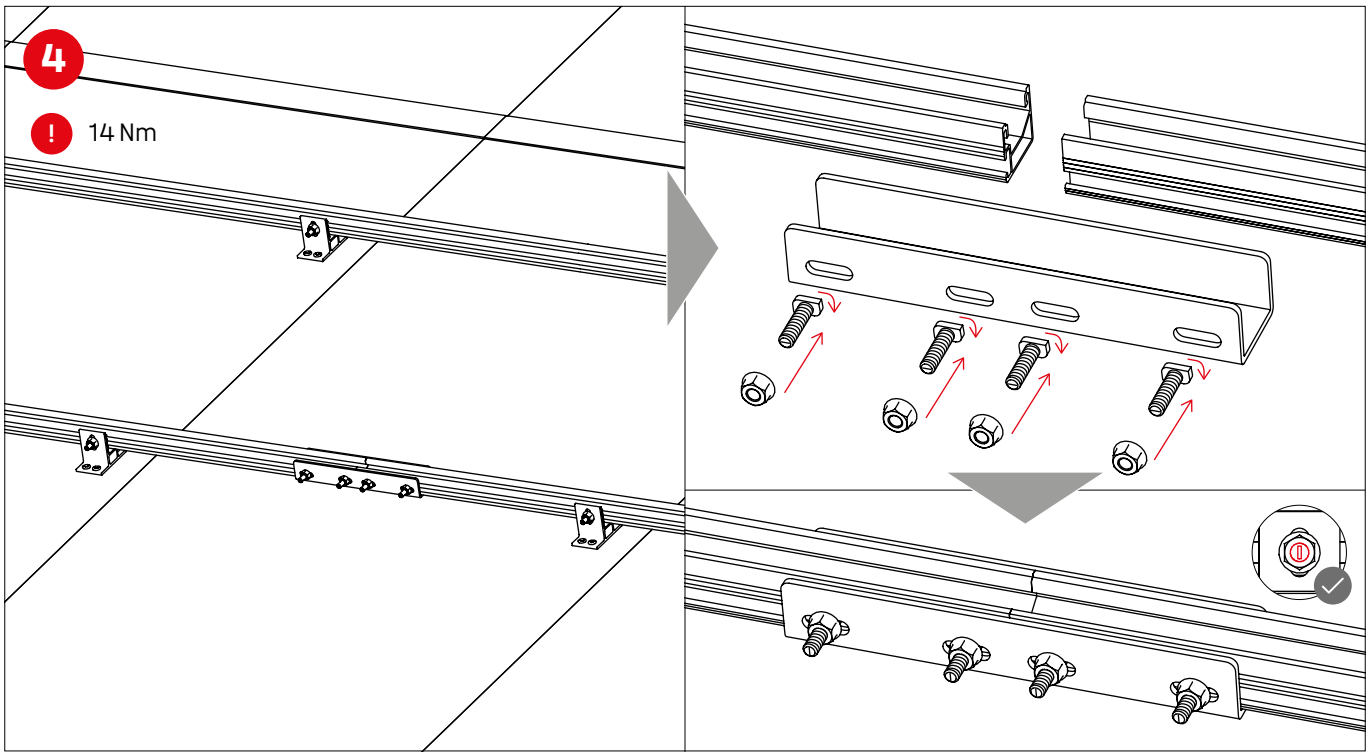
4
14 Nm

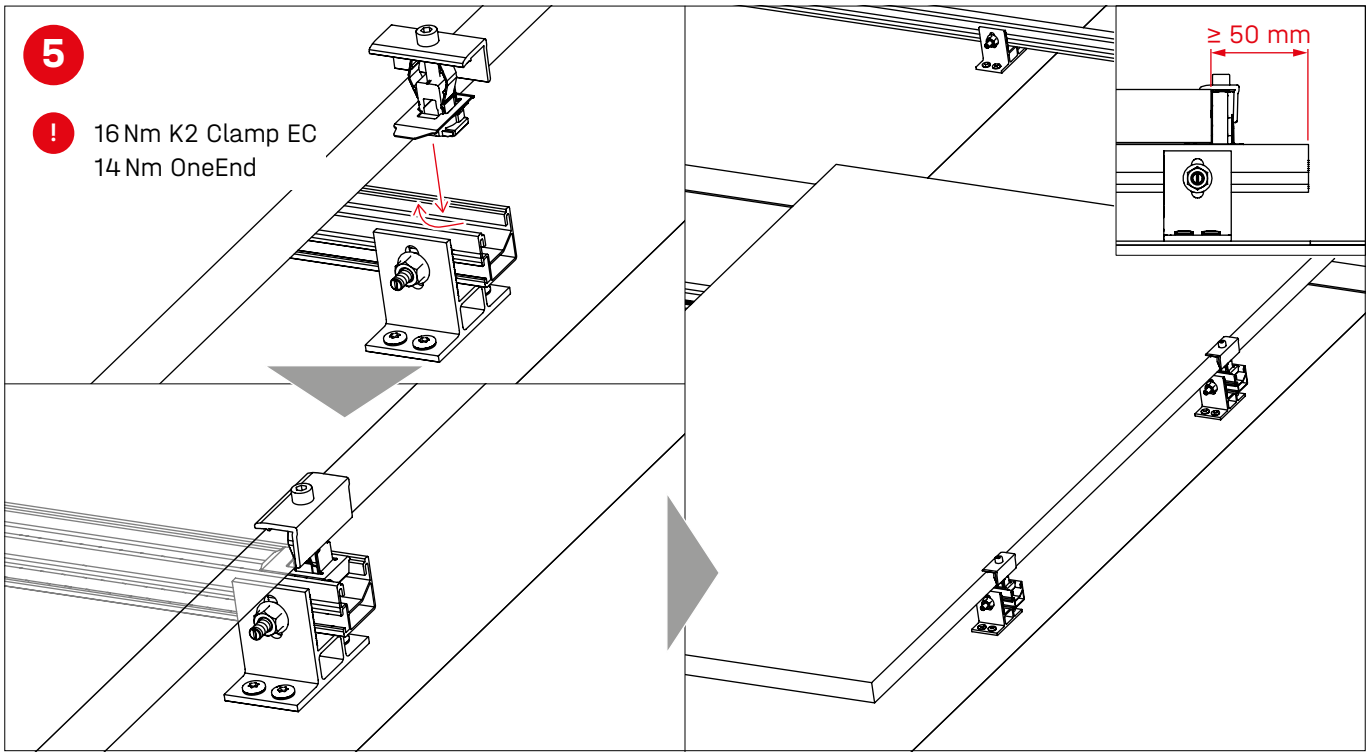
5
16 Nm K2 Clamp EC
14 Nm OneEnd
≥ 50 mm

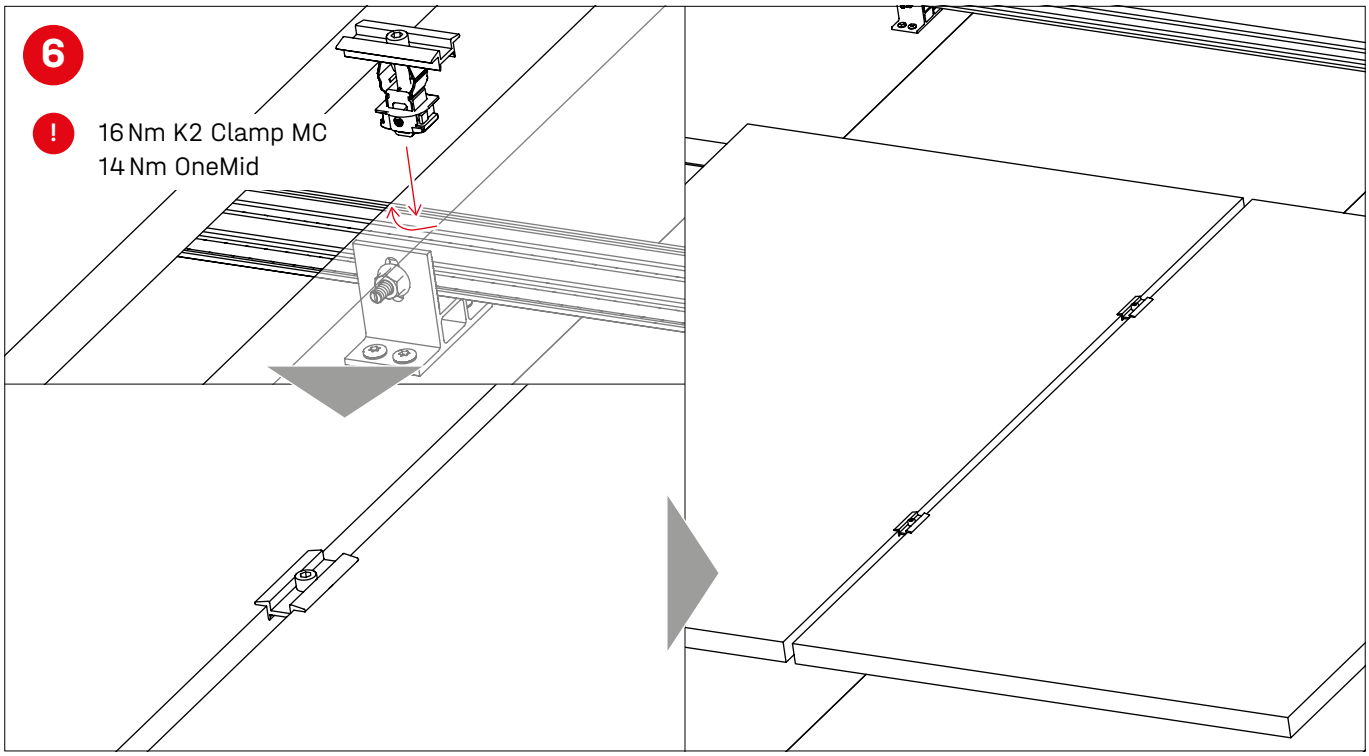
6
16 Nm K2 Clamp MC
14 Nm OneMid

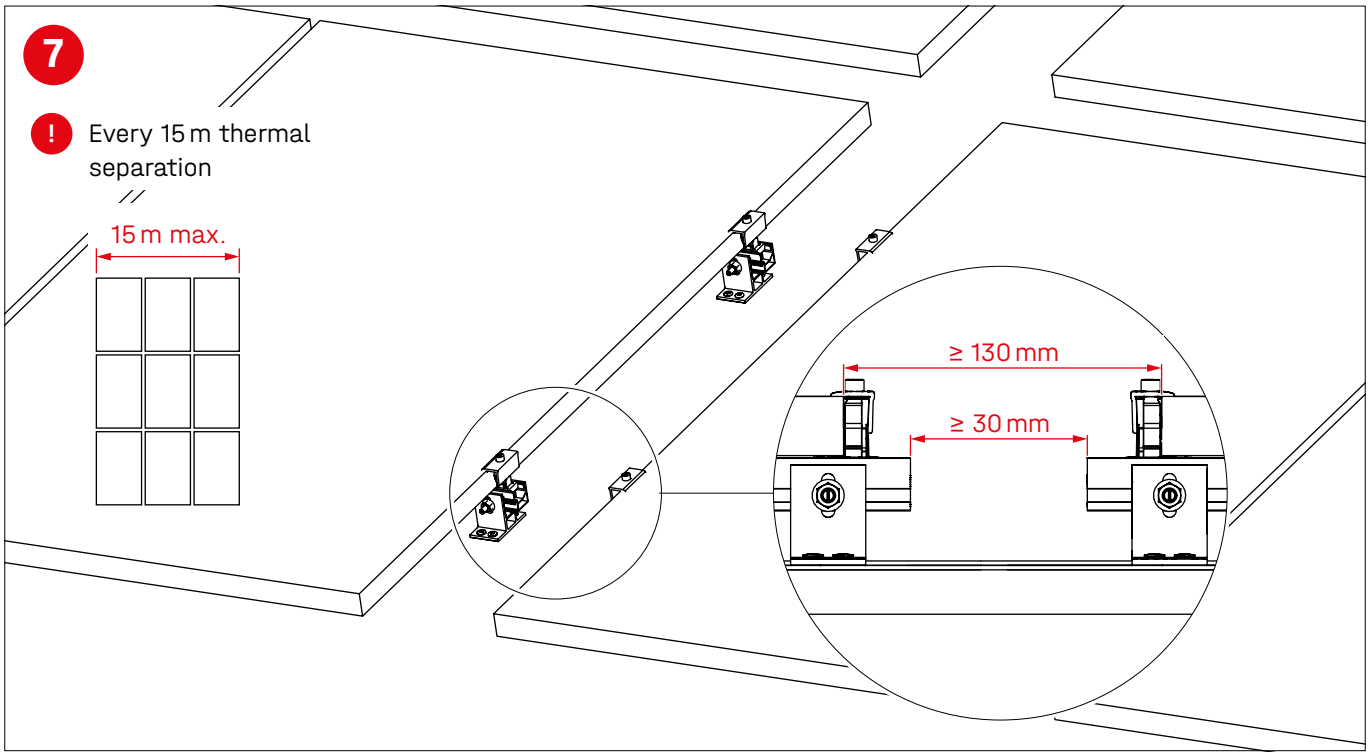
7
!
Every 15 m thermal separation
15 m max.
≥ 130 mm
≥ 30 mm

Module frame earthing with TerraGrif

TerraGrif QL oder K2SZ

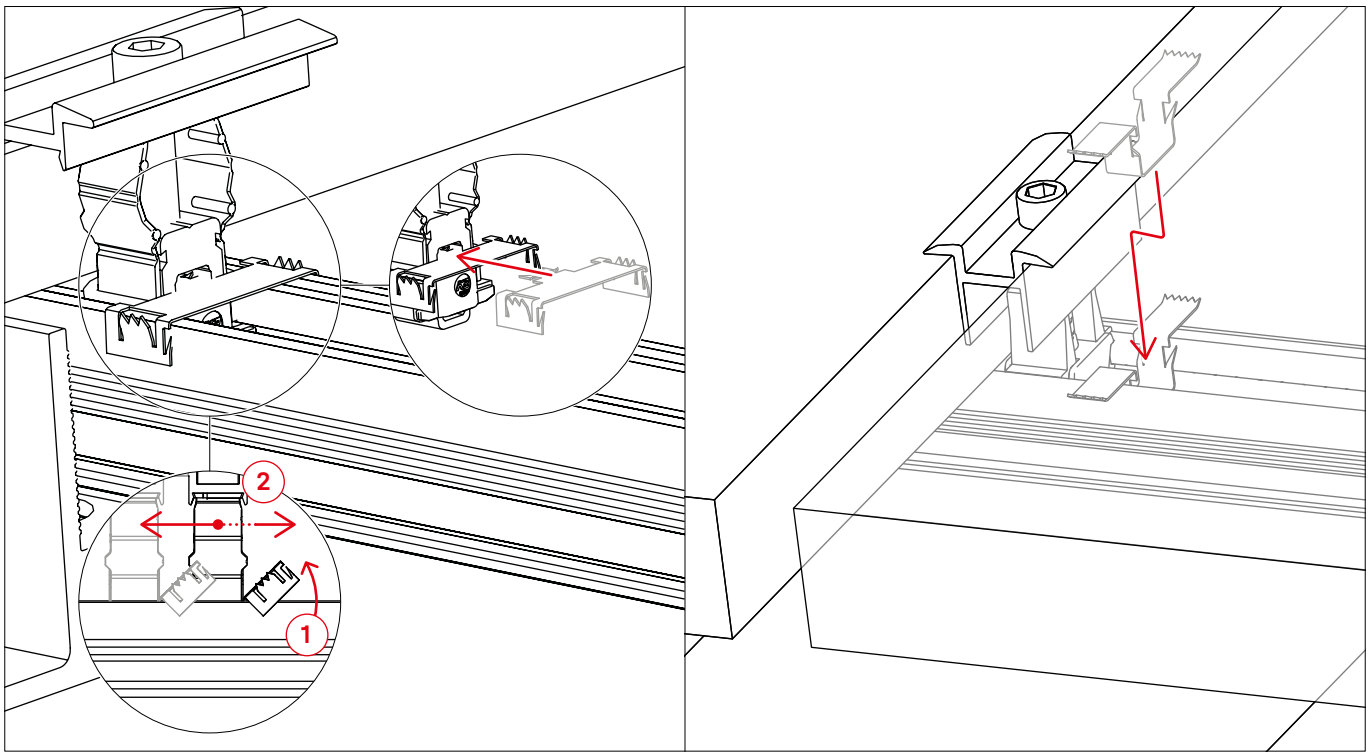

Notes

Thank you for choosing a K2 mounting system.

Systems from K2 Systems are quick and easy to install. We hope these instructions have helped. Please contact us with any questions or suggestions for improvement. Our contact data:

- **k2-systems.com/en/contact**
- **Service Hotline: +49 7159 42059-0**

Our General Terms of Business apply. Please refer: k2-systems.com

K2 Systems GmbH
Industriestraße 18 · 71272 Renningen · Germany
+49 (0) 7159 - 42059 - 0 · info@k2-systems.com · k2-systems.com

SingleRail SpliceFoot Assembly EN V1 | 0523 · Subject to change · Product illustrations are exemplary and may differ from the original.