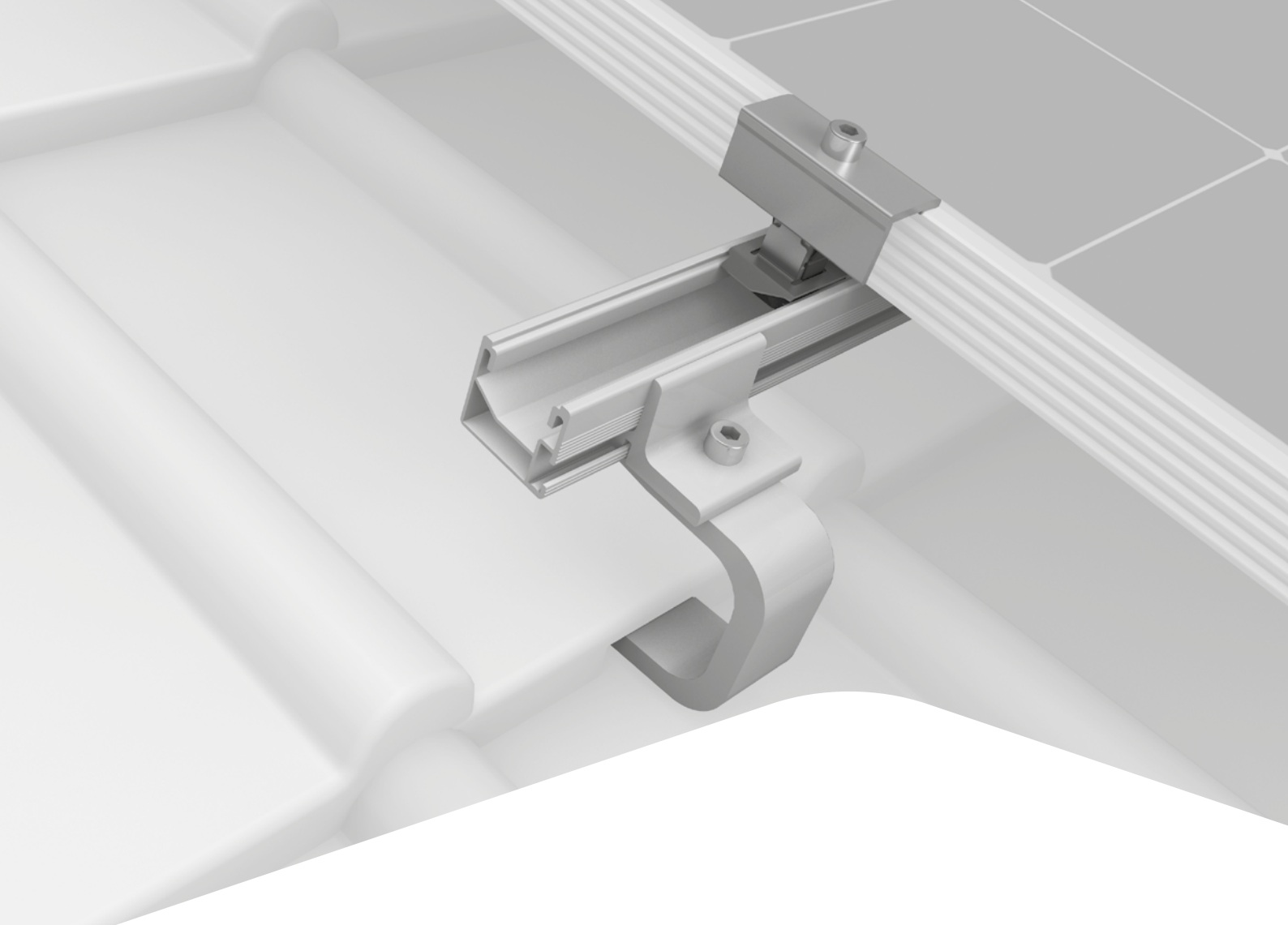

Assembly Manual

K2 SingleRail System

with roof hooks

Connecting Strength

k2-systems.com

Content

- **Tools overview** 3
- **General safety information** 4
- **The following guidelines apply** 5
  - Roof requirements 5
  - Important mounting instructions 5
- **Components** 6
  - Base components 6
  - SingleBoards 8
  - Height compensation and underlay 9
- **Compatible roof hooks** 10
  - SingleHook 3S 10
  - SingleHook 3S Long 10
  - SingleHook 4S 11
  - SingleHook 1.1 11
  - SingleHook Alpin 12
  - SingleHook 2 12
  - SingleHook Vario 13
  - L-Adapter for further roof hooks 13
- **Assembly** 15
  - Notes on rooftop insulation 15
  - Portrait 16
  - Thermal separations 19
  - Landscape with two rail layers 20
  - Thermal separations for 2-layer rails 22
  - Obstructions / roof edge: Use of SingleBoards 23
  - Compensate and underlay height differences 25
  - Attach BlackCover and EndCap 26
- **Notes** 27

Quality tested - several certifications

K2 Systems stands for secure connections, highest quality and precision. Our customers and business partners have known that for a long time. Independent institutes have tested, confirmed and certified our capabilities and components.

Please find our quality and product certificates under:
k2-systems.com/en/technical-information

Tools overview

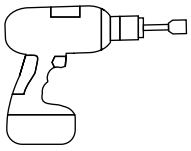

TX25/40



SW 13 mm

6 mm



8,5 mm

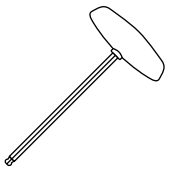

6 mm



6 - 30 Nm
(4.5 - 22.2 lb-ft)

6 mm



13 mm

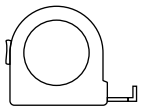

≥ 3.0 m

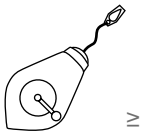

≥ 6.0 m

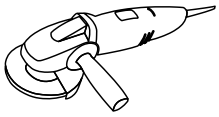

Digital Toolbox

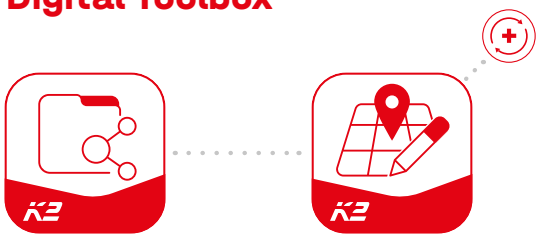

Do you already know our digital services? Use our K2 DocuApp now and record the first important data directly at the customer or project site. Simply transfer the data to our online planning software K2 Base. Here you can plan your project easily, safely and quickly. You receive a detailed project report with assembly plan and static report.
The K2+ interface enables seamless project data transfer to the planning tools of well-known inverter manufacturers or yield planning tools.

Get started and register now:

docuapp.k2-systems.com

base.k2-systems.com

General safety information

Please note that our general mounting instructions must be followed at all times and can be viewed online at k2-systems.com/en/technical-information

- The equipment may only be installed and operated by qualified and adequately trained installers.
- Prior to installation, ensure that the product complies with on-site static loading requirements.
  For roof-mounted systems, the roof load-bearing capacity must always be checked.
- National and local building regulations and environmental requirements must be adhered to.
- Compliance with health and safety regulations, accident prevention guidelines and applicable standards is required.
  - Protective equipment such as safety helmet, boots and gloves must be worn.
  - Roofing works must be in accordance with roofing regulations utilising fall protection safeguards when eaves height exceeds 3 m.
  - At least two people must be present for the duration of the installation work in order to provide rapid assistance in the event of an emergency.
- K2 mounting systems are continuously developed and improved and the installation process may thereby change at any time. Prior to installation consult our website at
  www.k2-systems.com/en/technical-information for up-to-date instructions.
  We can send you the latest version on request.
- The assembly instructions of the module manufacturer must be adhered to.
- Equipotential bonding/grounding/earthing between individual parts is to be performed according to country specific standards, as well as national laws and regulations.
- At least one copy of the assembly instructions should be available on site throughout the duration of the installation.
- Failure to adhere to our general safety and assembly instructions and not using all system components, K2 is not liable for any resulting defects or damages. We do not accept liability for any damage resulting in the use of competitor's parts. Warranty is excluded in such cases.
- German law shall apply excluding the UN Convention on CISG. Place of venue is Stuttgart. Our General Terms of Business apply.
- If all safety instructions are adhered to and the system is correctly installed, there is a product warranty entitlement of 12 years! We strongly recommend reviewing our terms of guarantee, which can be viewed at
  www.k2-systems.com/en/technical-information
  We will also send this information on request.
- Dismantling of the system is performed in reverse order to the assembly.
- K2 stainless steel components are available in different corrosion resistance classes. Each structure or component must be carefully checked for possible corrosion exposure.

The following guidelines apply

The SingleRail system with roof hooks can be used without further testing by K2 Systems in the following standard conditions. To calculate maximum distances between supports we recommend using our calculation tool K2 Base. The system is also suitable for higher requirements. However, if a value exceeds the standard conditions, please contact K2 Systems.

Roof requirements

- The sufficient holding force of the roof covering at the support or substructure must be ensured on site.
- Roof pitch of 5 - 75°
- Sufficient load reserves to support the PV system.

Important mounting instructions

- On-site general standards and regulations for lightning protection must be observed and consultation with a specialist to create a lightning protection concept is recommended (use lightning protection clamp if necessary).
- Please refer to our Handbook "Wood Screw Fixation of K2 Roof Hooks" for the installation of all roof hooks k2-systems.com/en/handbook-roof-hooks
- We recommend a thermal separation after maximum of 17.6 m.
- A minimum mounting distance of 50 mm from the end of the rail / rail joint to the module frame.
- Tightening torque for all module clamps 16 Nm
- For manufacturer information regarding clamps see the manufacturing module data sheet.
- In order to avoid damage under high snow loads, replace the clay/concrete roof tile with metal roof plate or sheet metal replacement tile under the bracket of the roof hook (exception SingleHook 2).
- Do not step on roof hooks or rails, as these are not climbing assists.
- Sizing and positioning of the wood screws are subject to the relevant regulations.
- In the case of pressure-soft rooftop insulation, especially that made of mineral fibres, care must be taken to ensure a suitable spacer screw connection of the counter batten to the rafter.
- The following applies to all insulation materials: With counter-batten thicknesses greater than 40 mm, the roof hooks can also be fastened exclusively into the counter-batten if it is sufficiently shear- and pressure-resistant.

Components

Base components

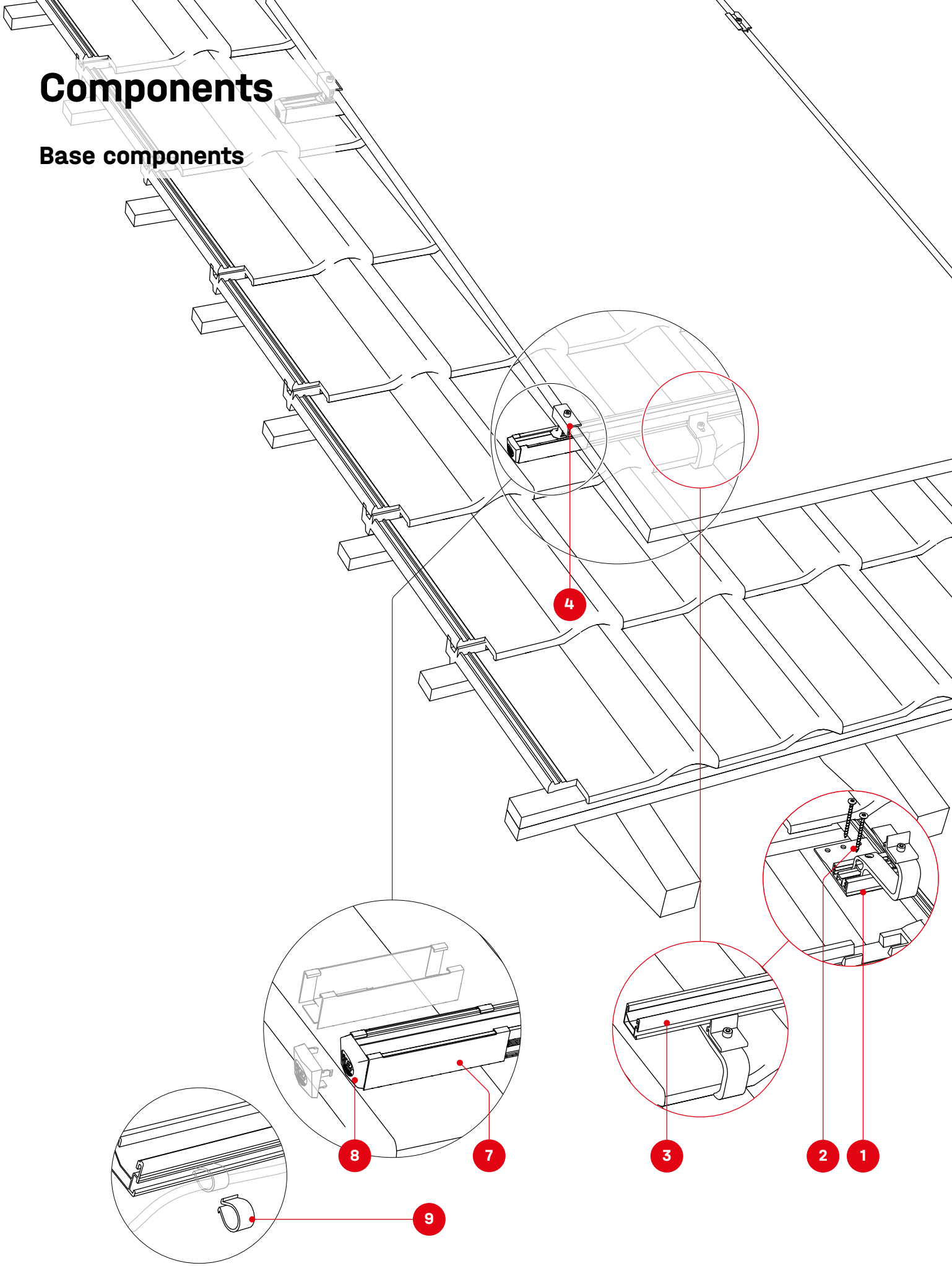

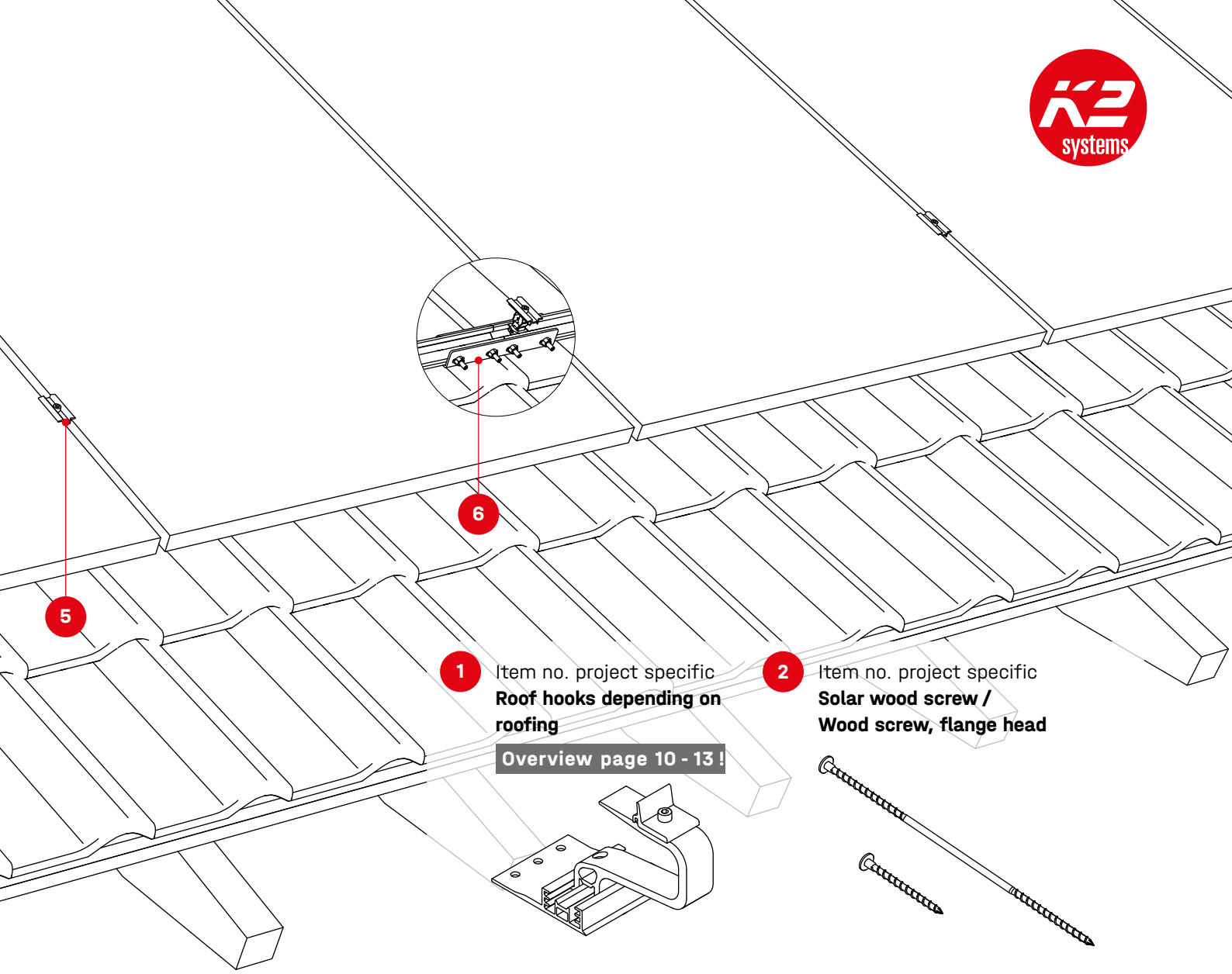

1 Item no. project specific
Roof hooks depending on roofing

Overview page 10 - 13 !

2 Item no. project specific
Solar wood screw / Wood screw, flange head

3 Item no. project specific
SingleRail 36, 50 or Light

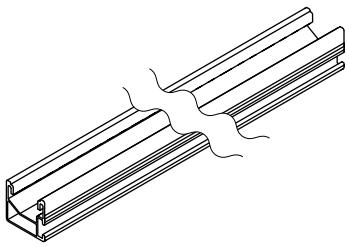

4 Item no. project specific
K2 Clamp EC / OneEnd

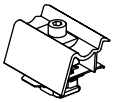

K2 Clamp EC 30 - 40, Hybrid
Silver 2003451
Black 2003452

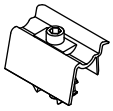

End Clamp OneEnd 30-42
Silver 2002514
Black 2002589

5 Item no. project specific
K2 Clamp MC / OneMid

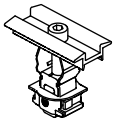

K2 Clamp MC 25 - 40
Silver 2004146
Black 2004148

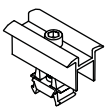

Middle Clamp OneMid 30-42
Silver 2003071
Black 2003072

6 2001976 / 2002404
SingleRail 36/50 Connector Set

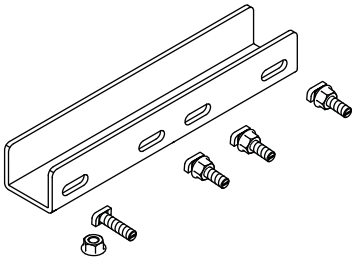

7 1004767
EndCap SingleRail 36

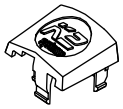

8 2003523
BlackCover SingleRail 36

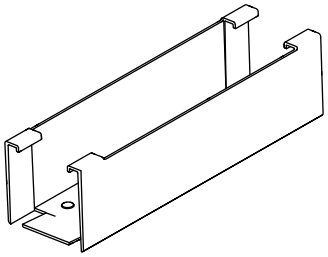

9 1005394
Omega Cable Clip



Components

SingleBoards

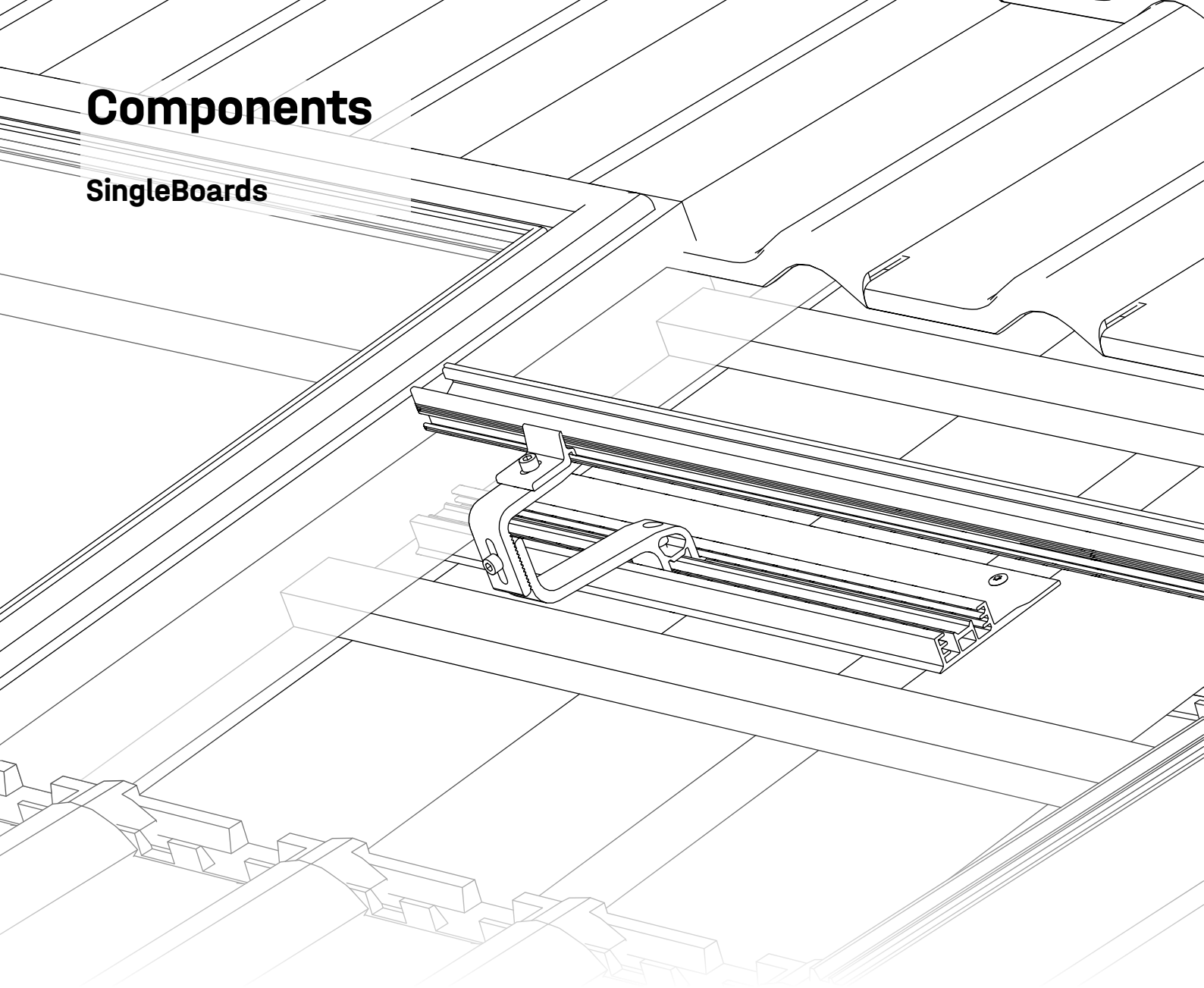

1 2001972 / 2002935
SingleBoard 3S/4S / SingleBoard

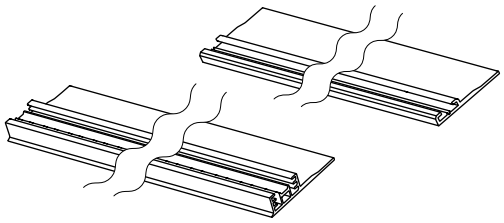

2 2002927 / 2003152
SingleBracket 4S / SingleBracket 1.1

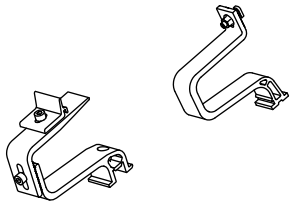

Drilling specifications for SingleBoards

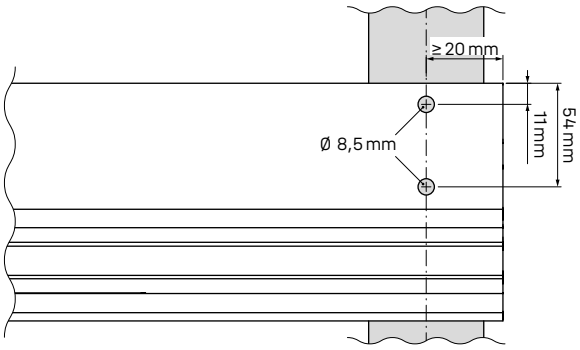

Height compensation and underlay

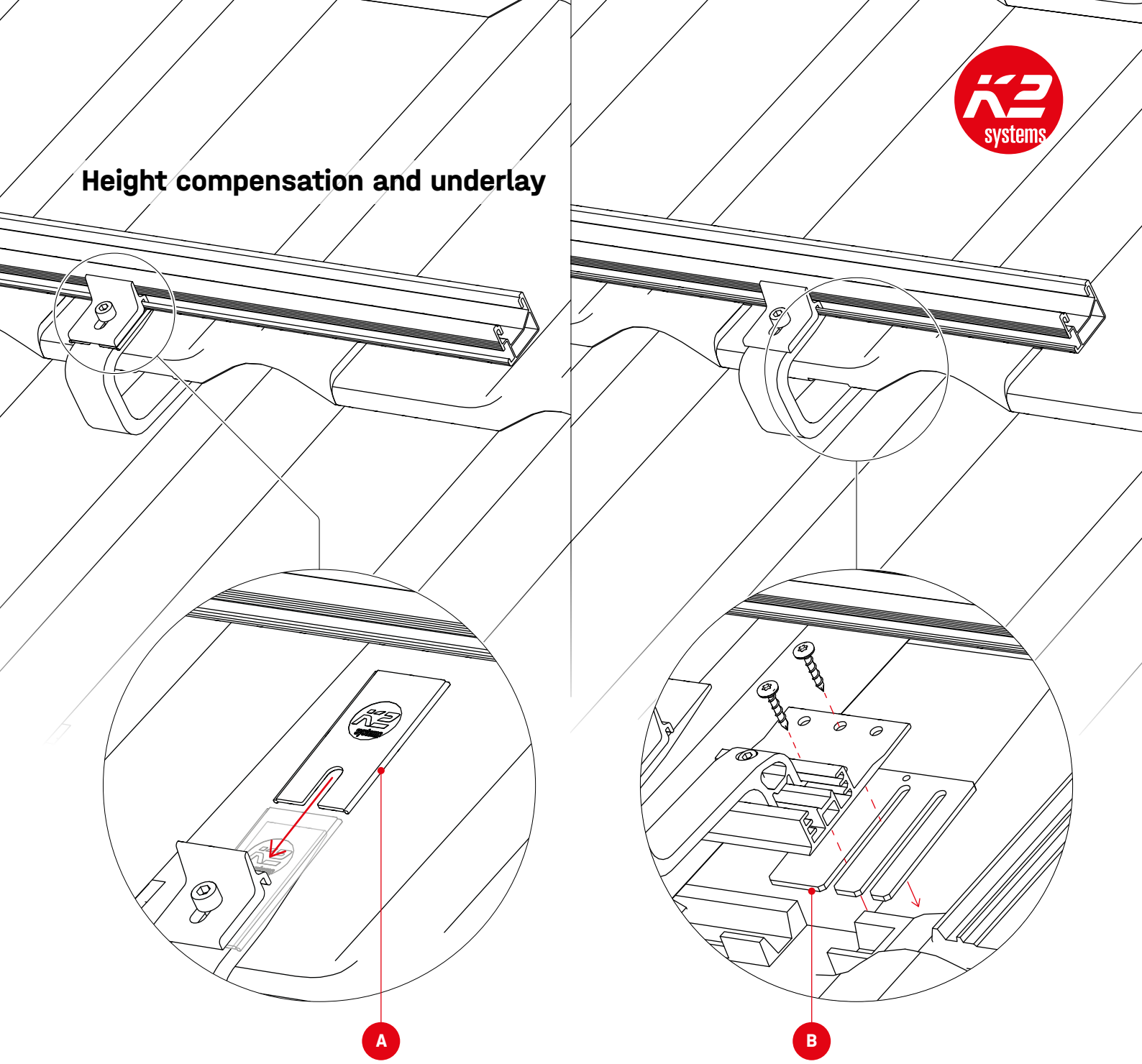

1002361
Distance Pad
2 mm

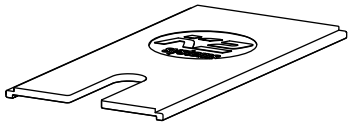

2002332
Roof Hook Height Compensator
4 mm

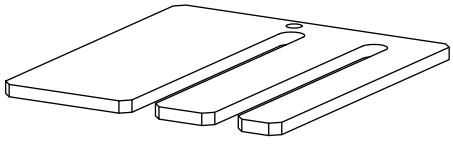

SingleHook 3S/4S/3S Long 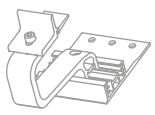	●	●
SingleHook 1.1/Vario/Alpin 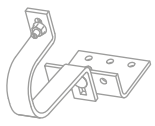	○	●

● Compatible ○ Not Compatible

Compatible roof hooks

SingleHook 3S · 2003215

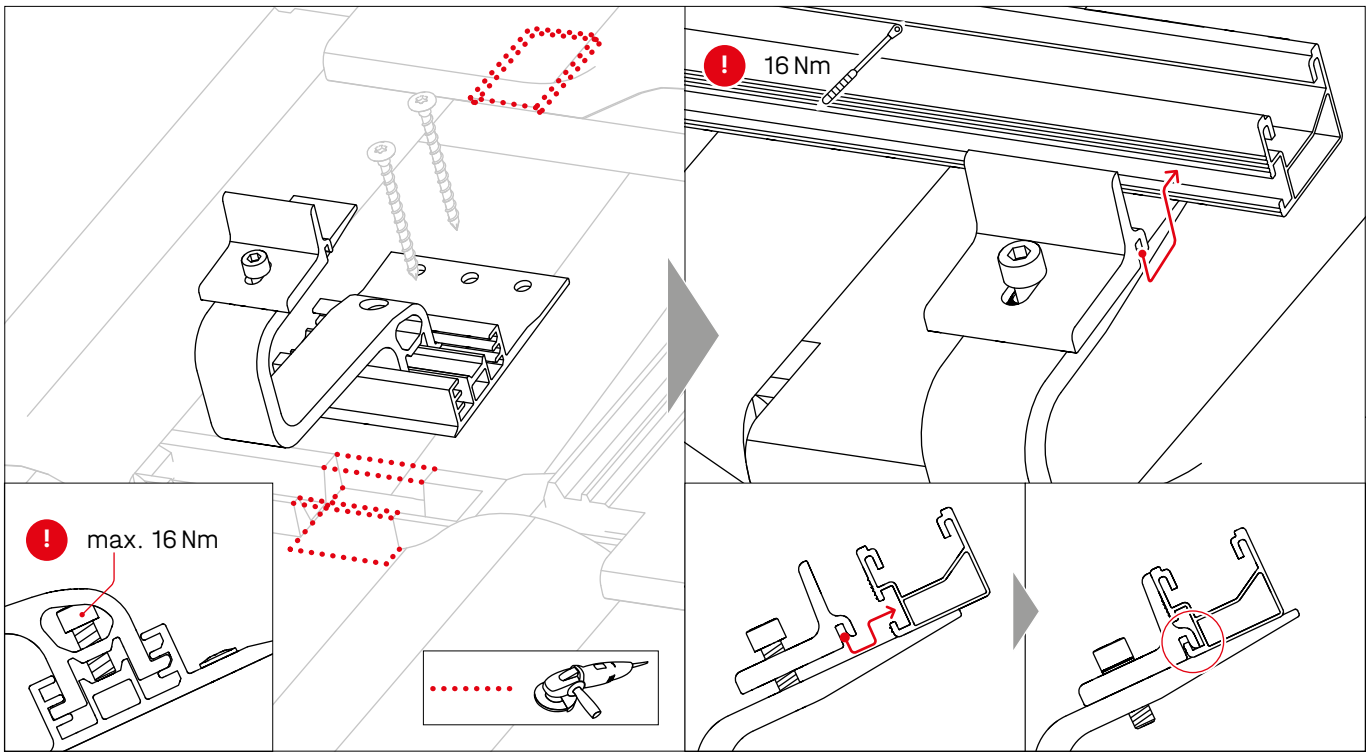

SingleHook 3S Long · 2004222

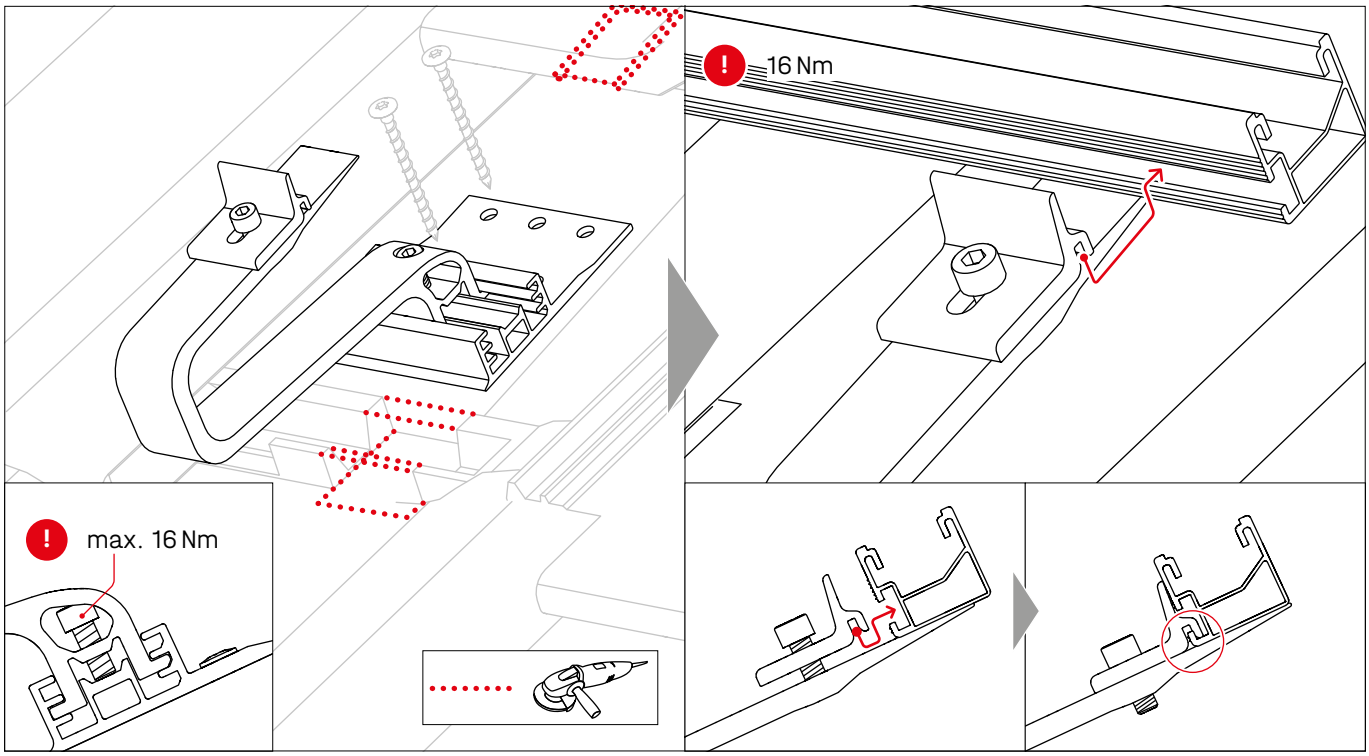

SingleHook 4S · 2003144

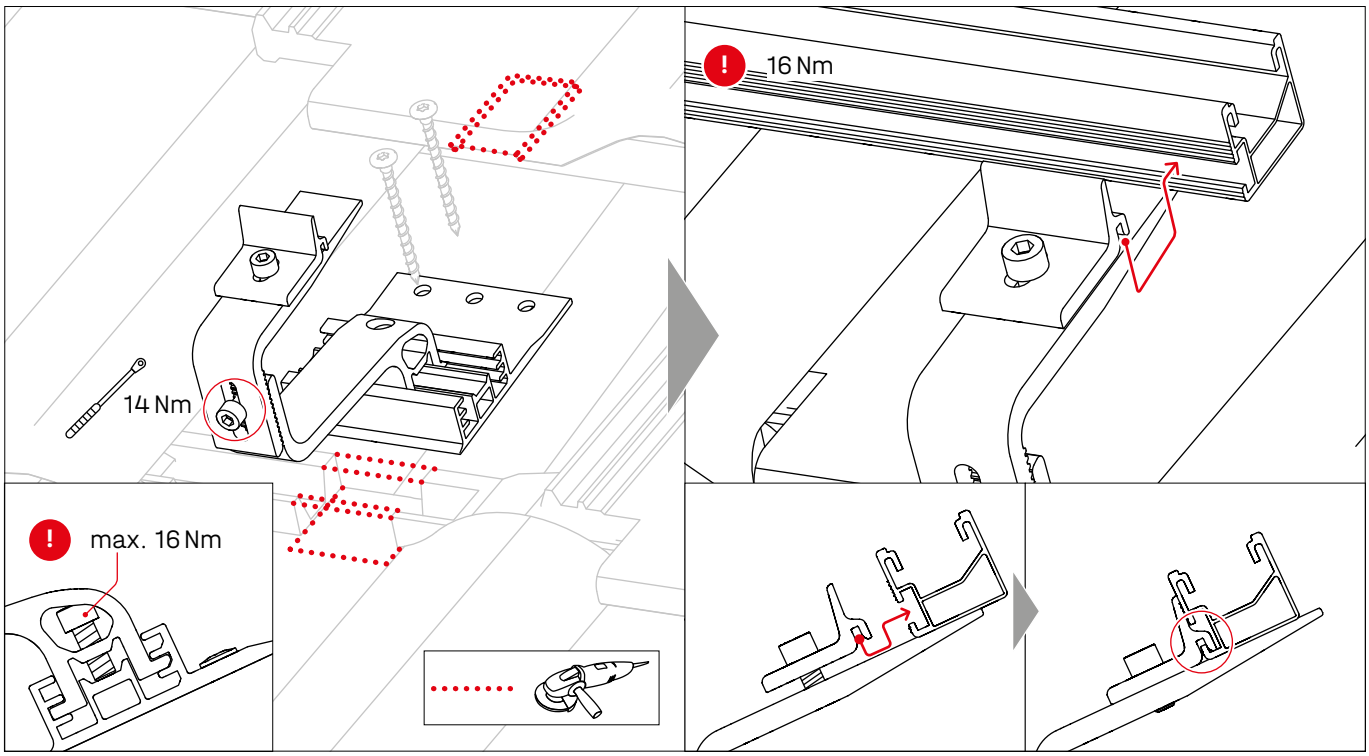

SingleHook 1.1 · 2001928

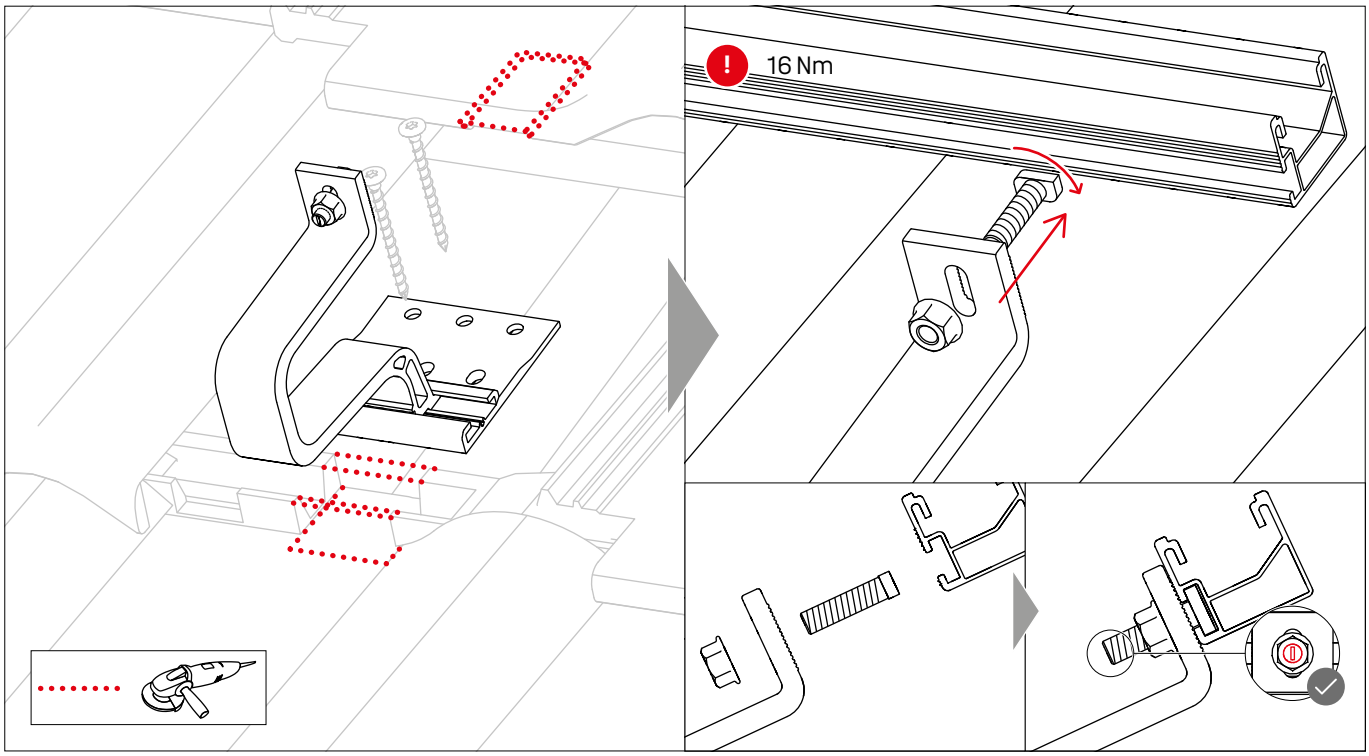

SingleHook Alpin · 2003155

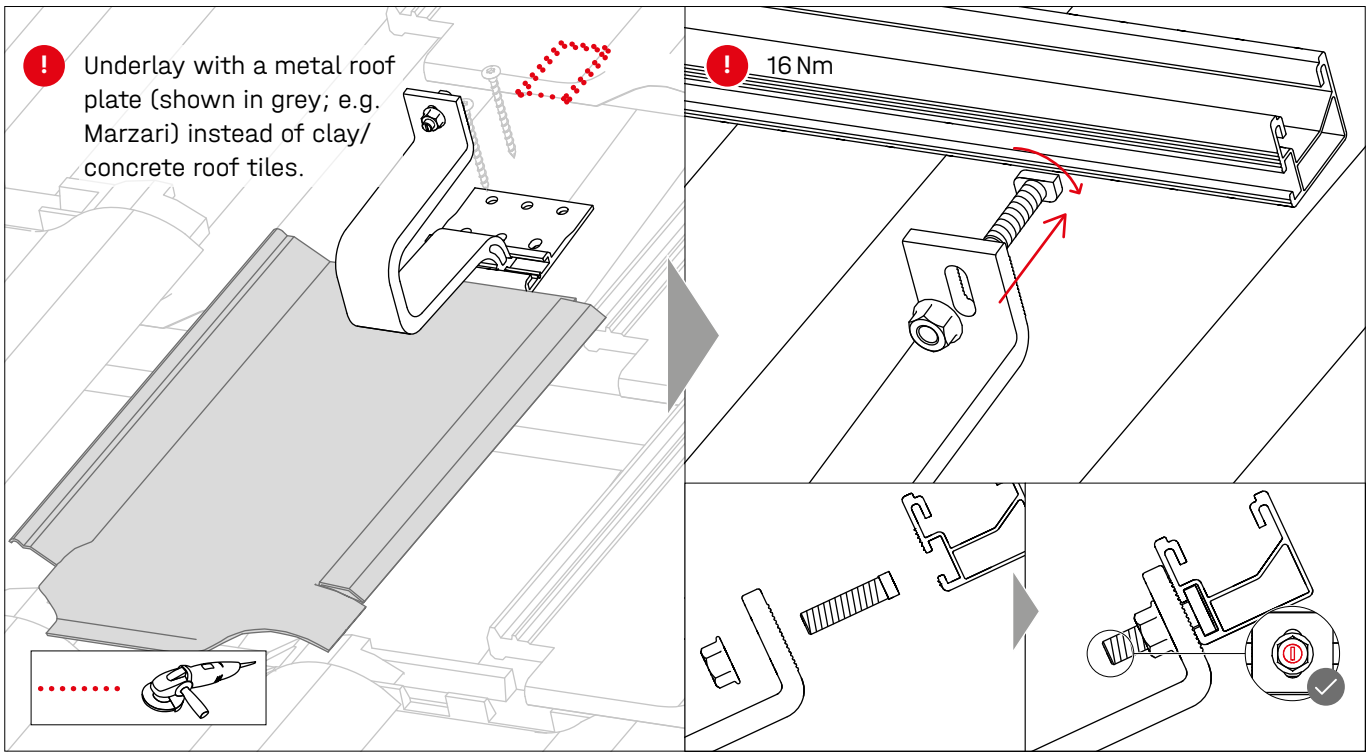

SingleHook 2 · 2003175

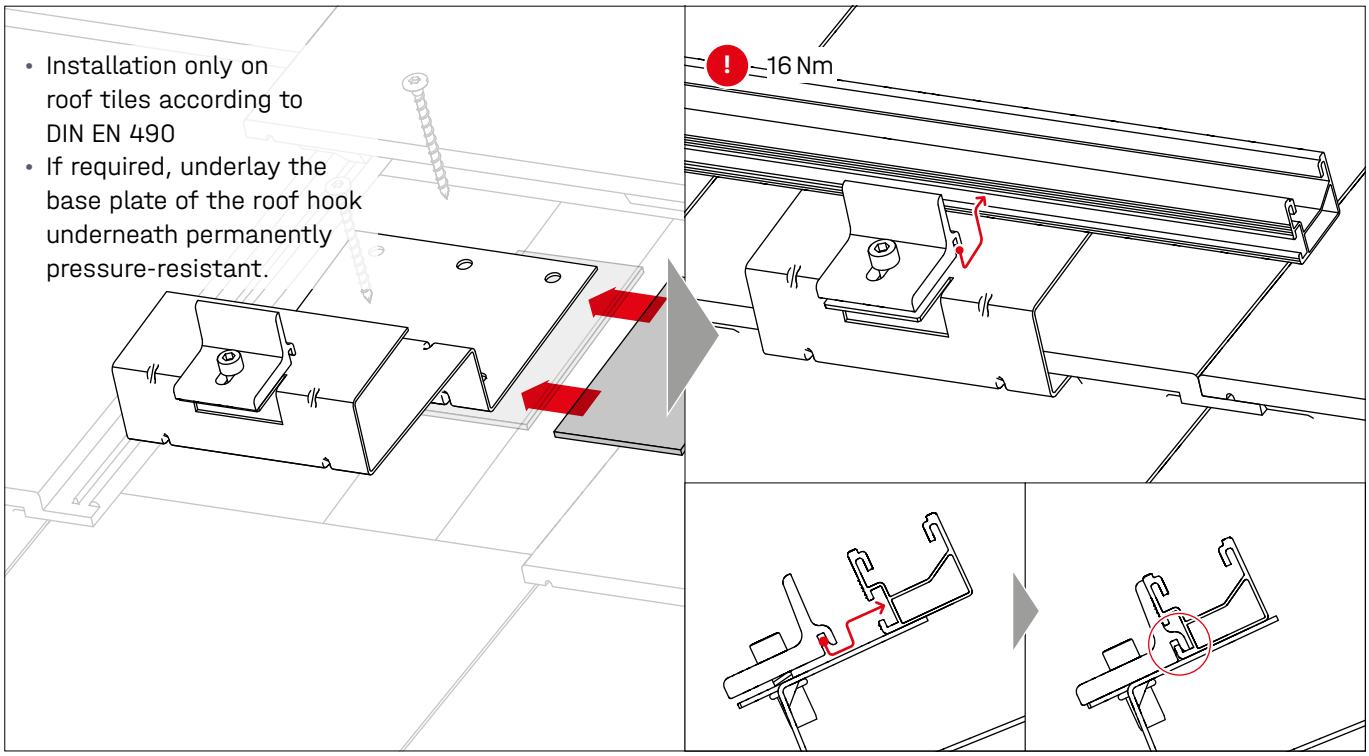

SingleHook Vario · 2002651

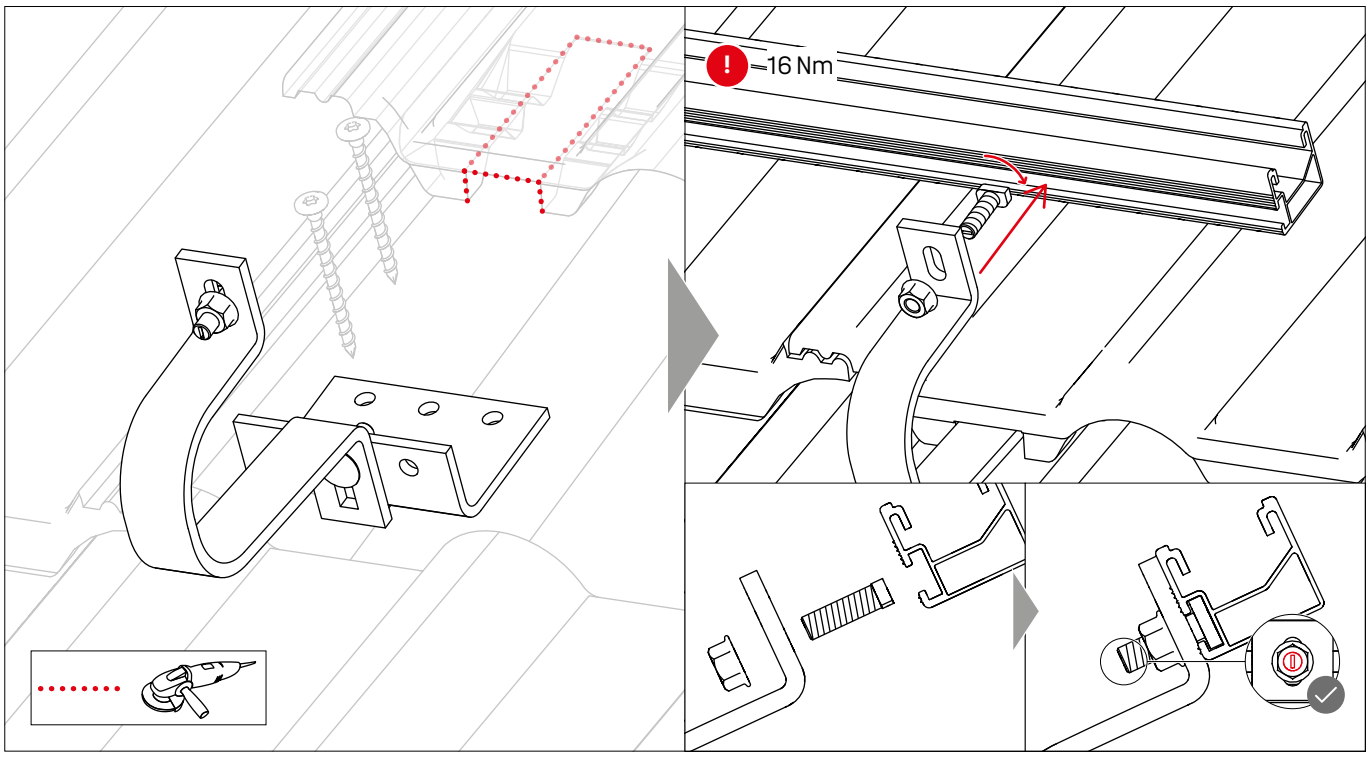

L-Adapter for further roof hooks · 2002683

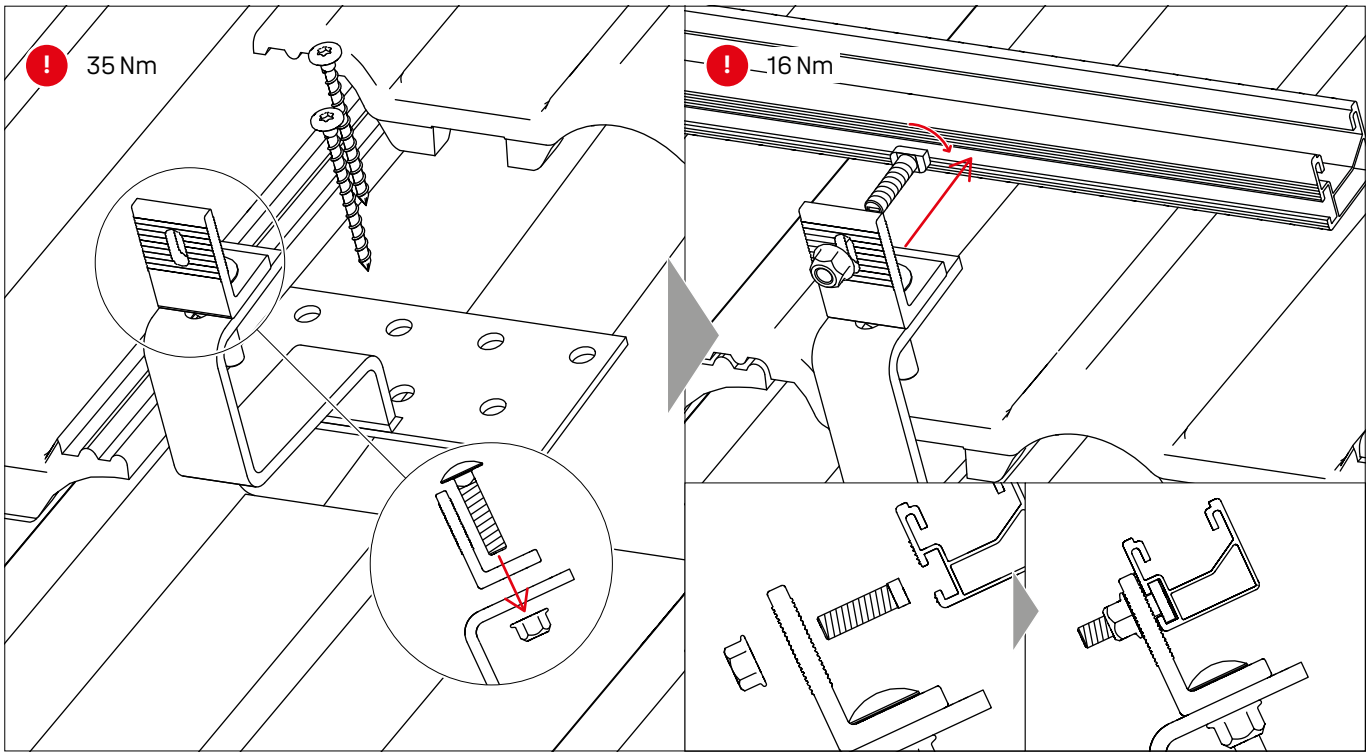

Assembly

Notes on rooftop insulation

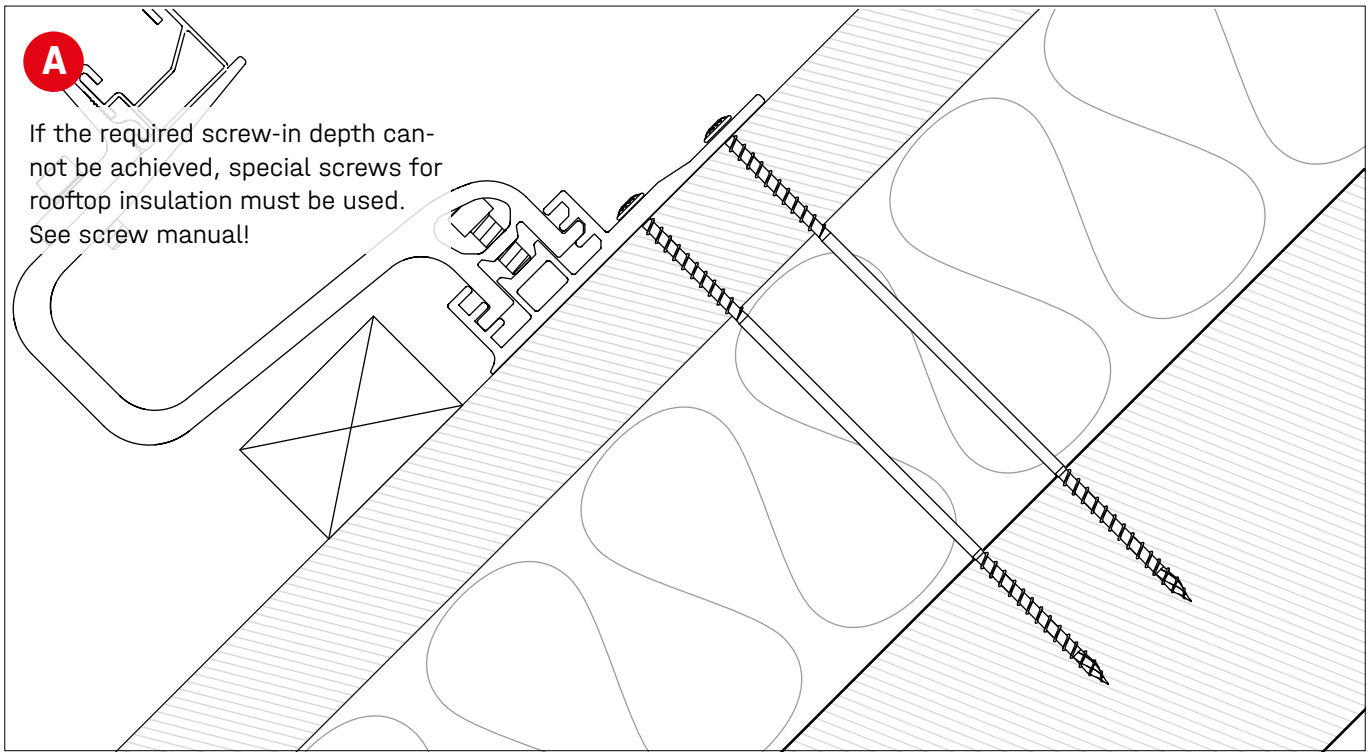

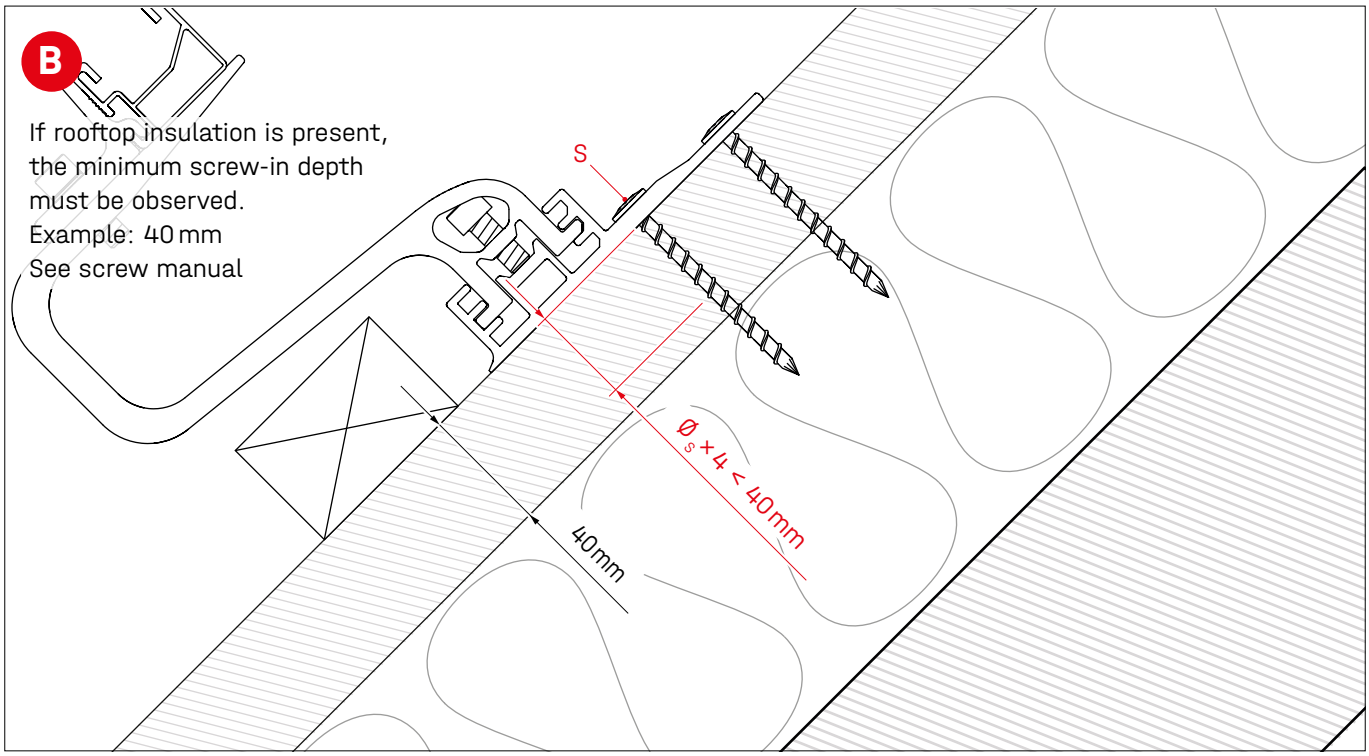

Assembly

Portrait

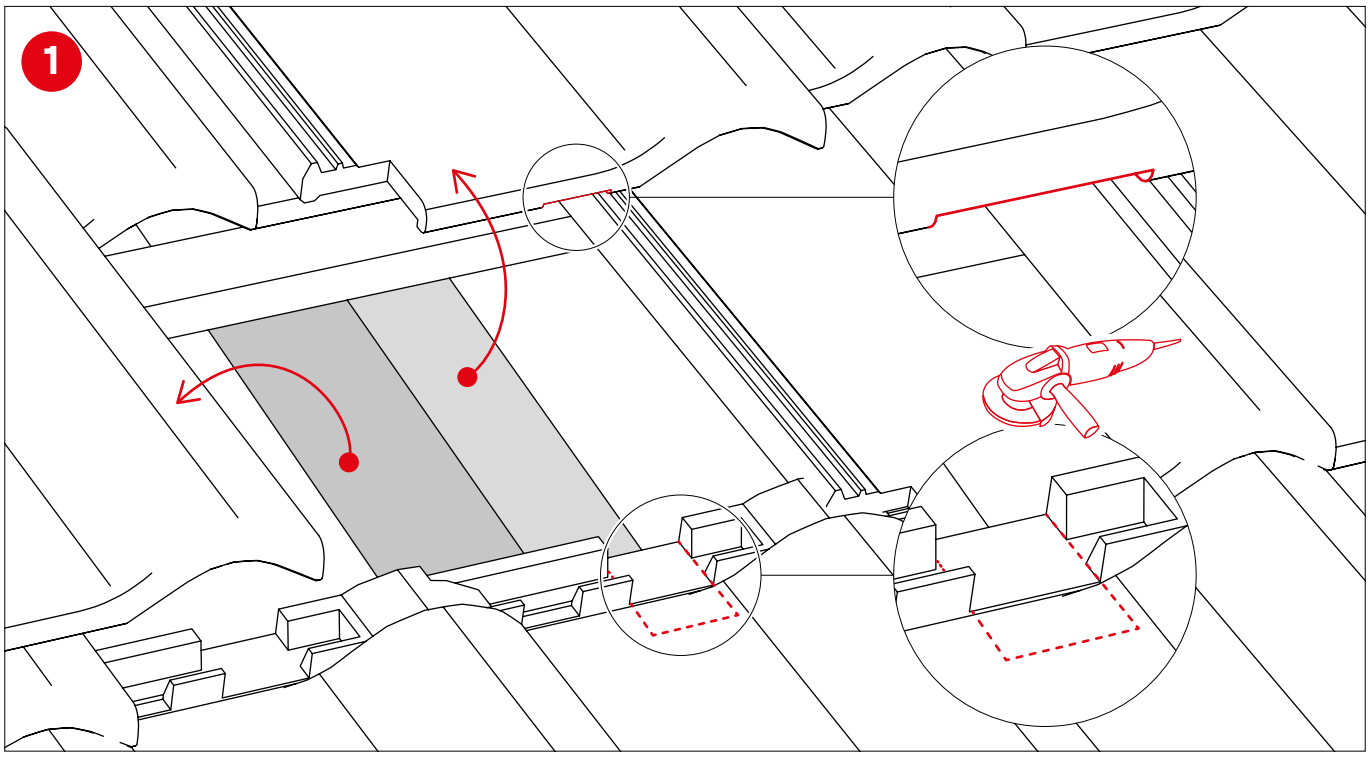

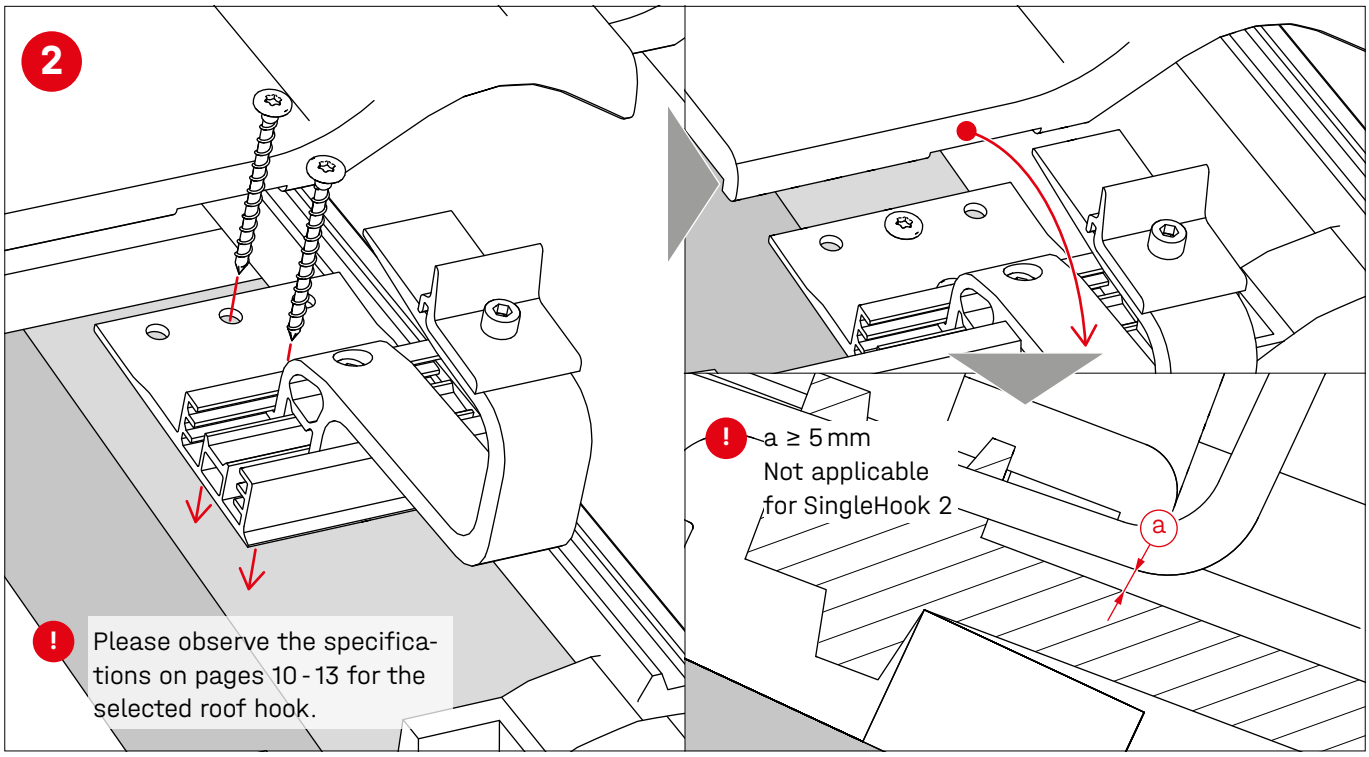

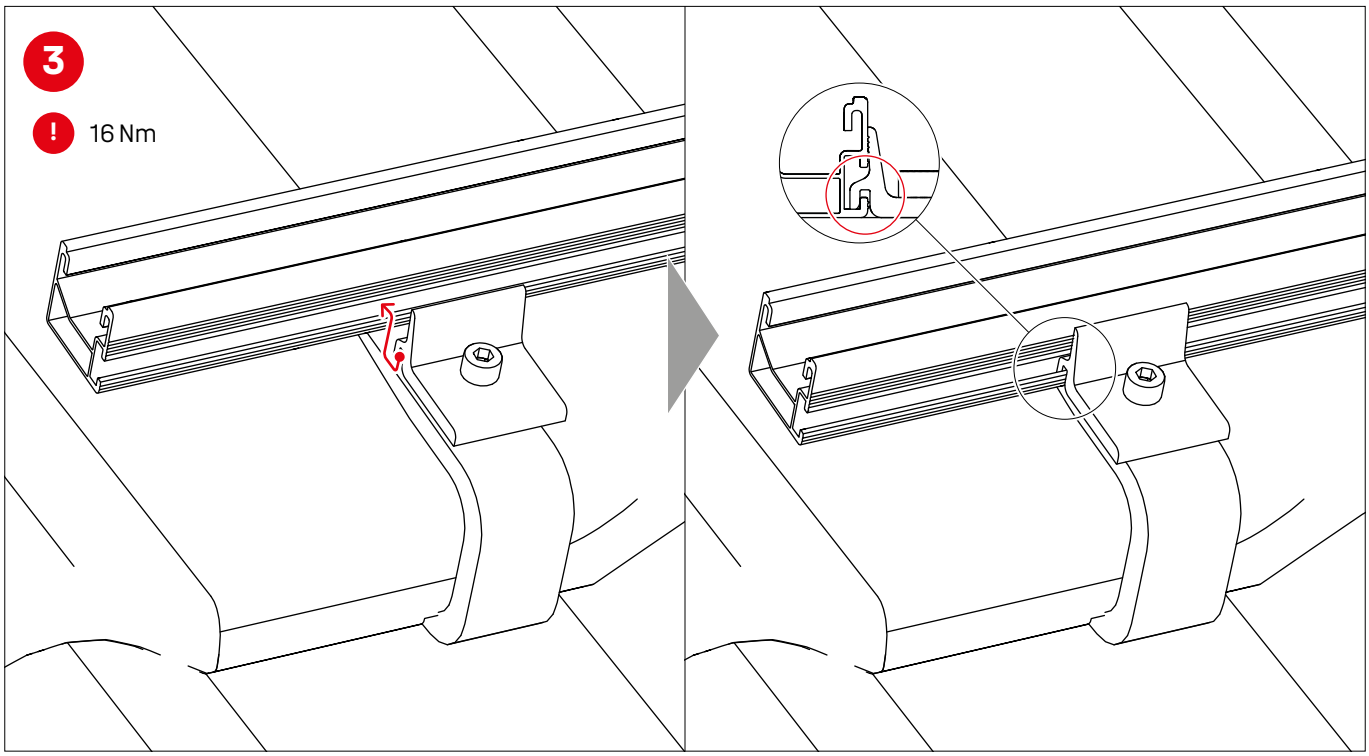
3
16 Nm

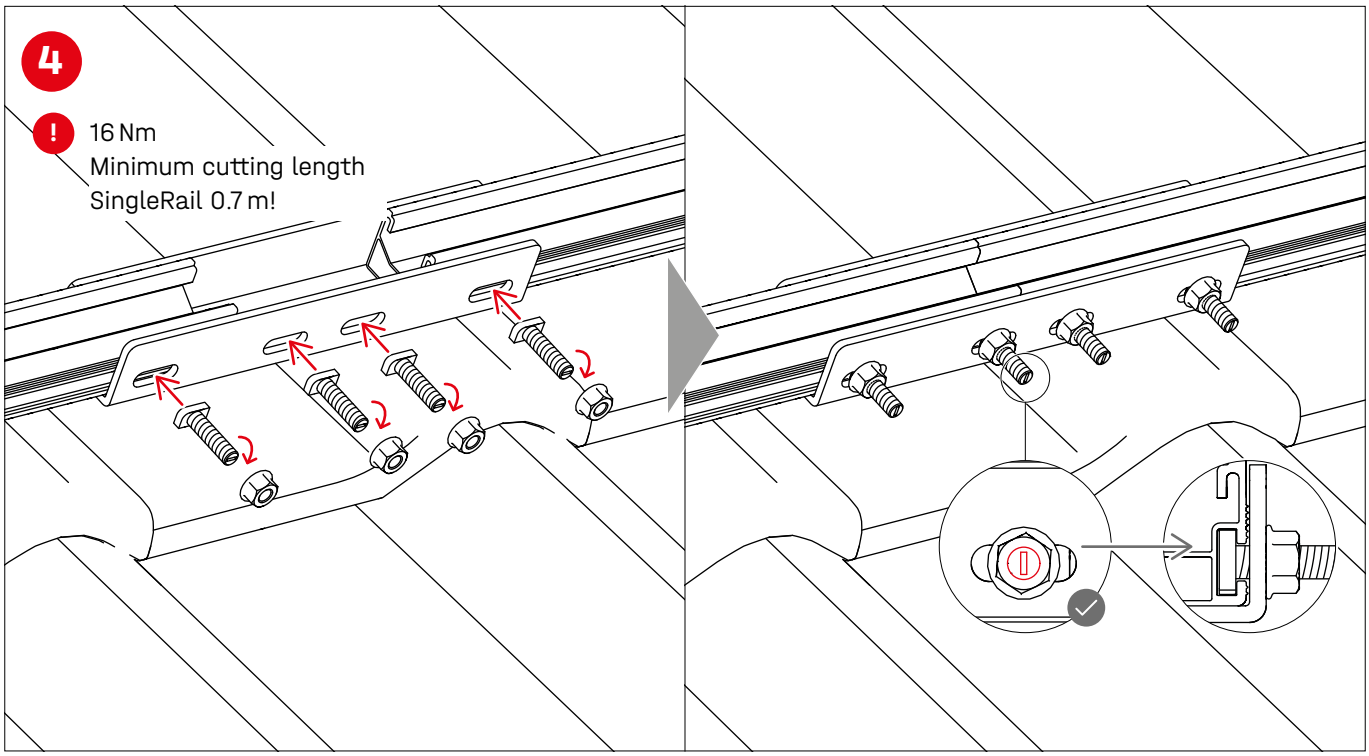
4
16 Nm
Minimum cutting length
SingleRail 0.7 m!

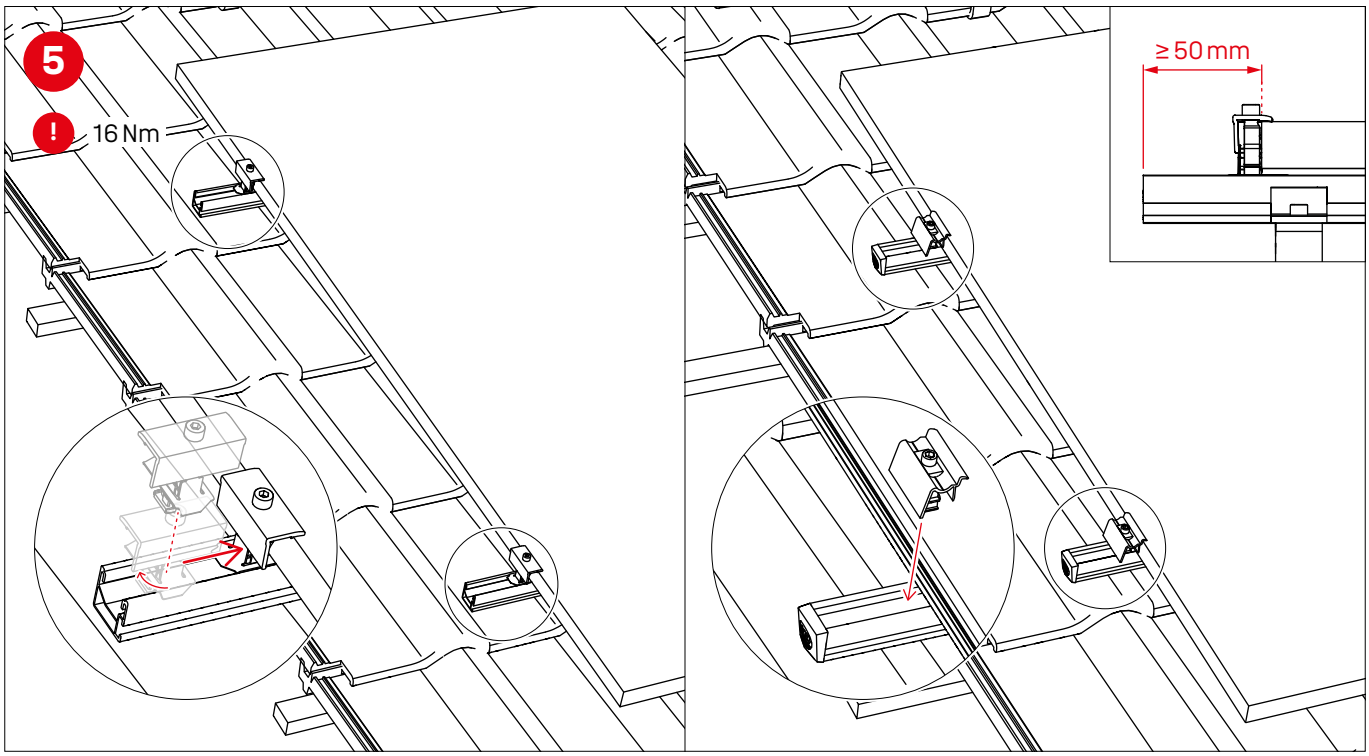
5
16 Nm
≥ 50 mm

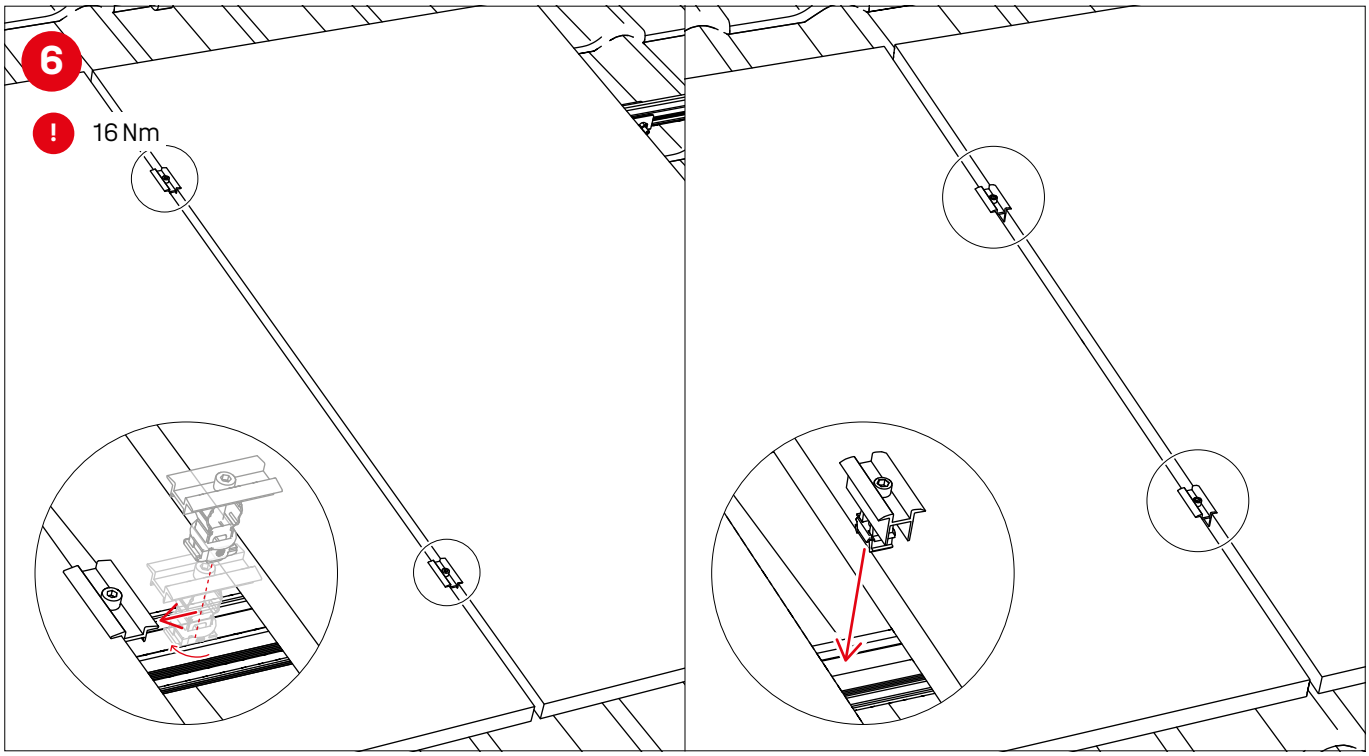
6
16 Nm

Thermal separations

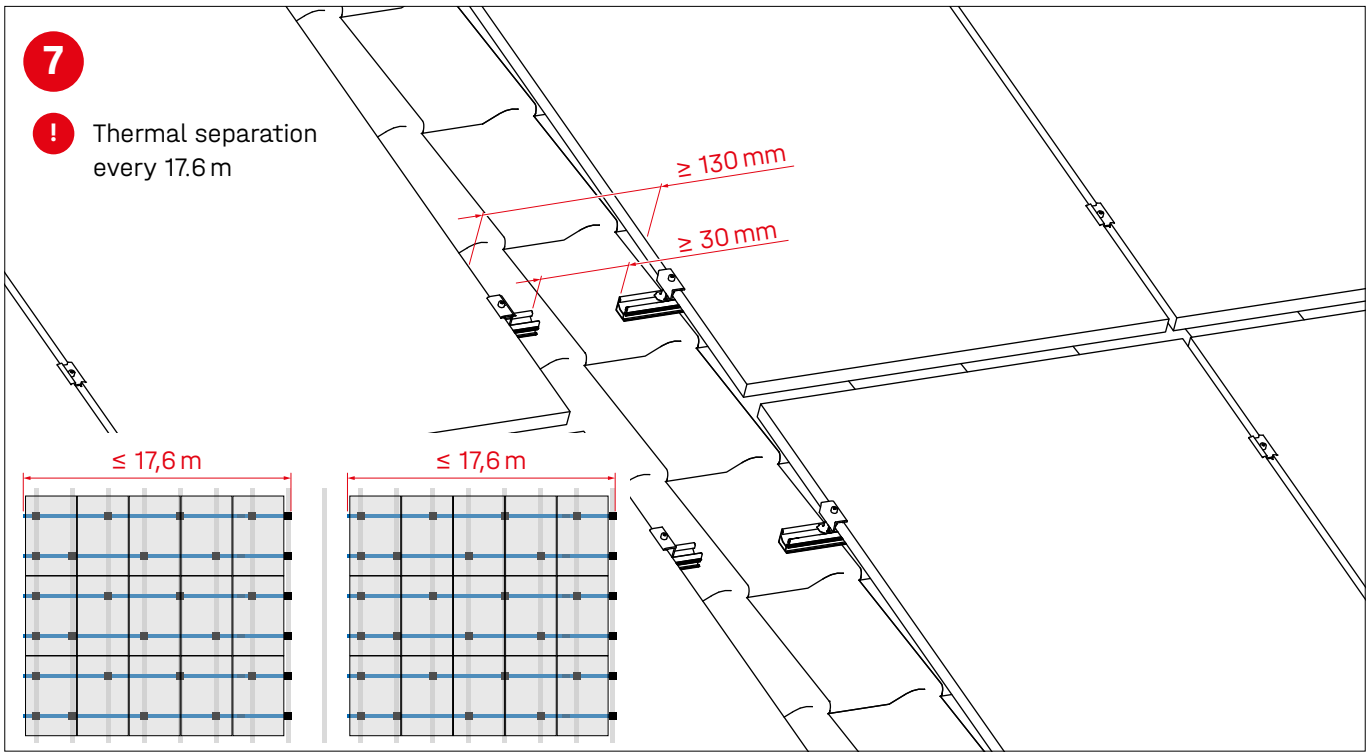

Landscape with two rail layers

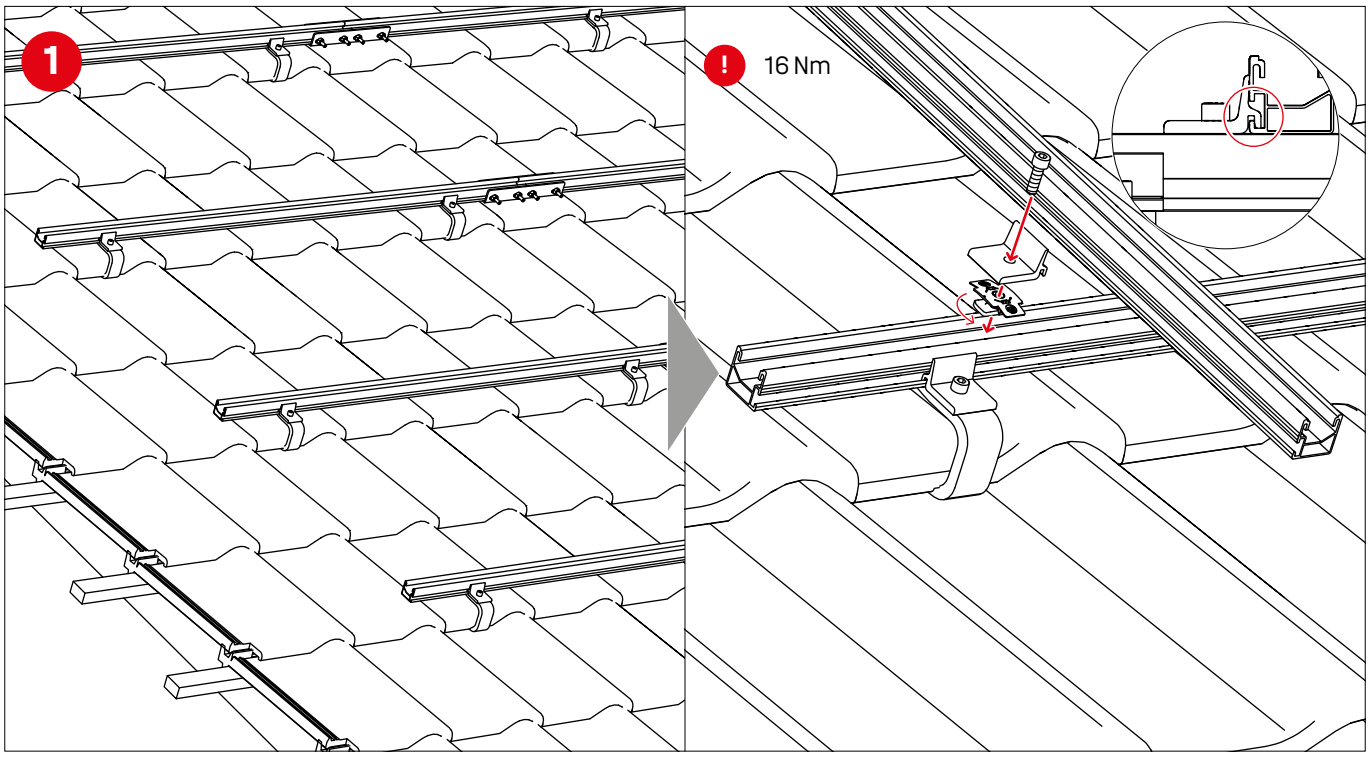

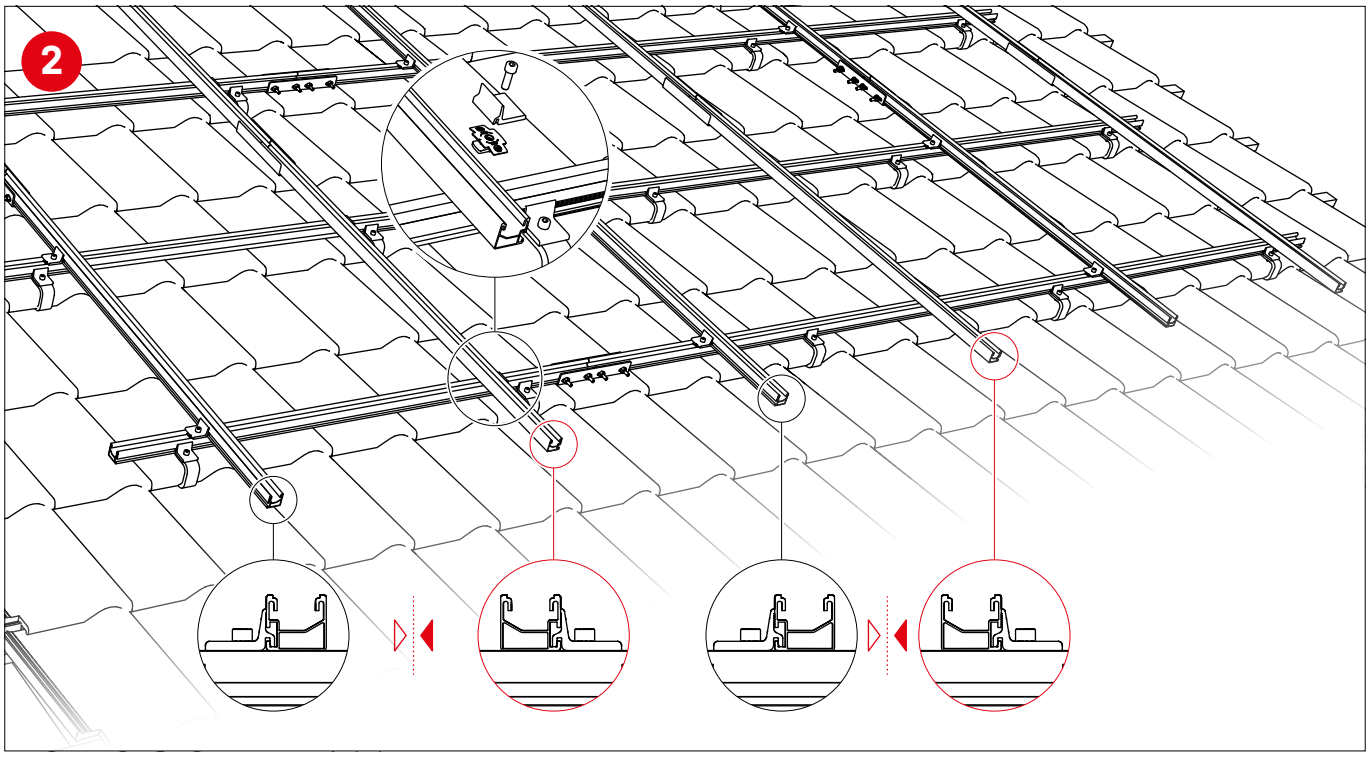

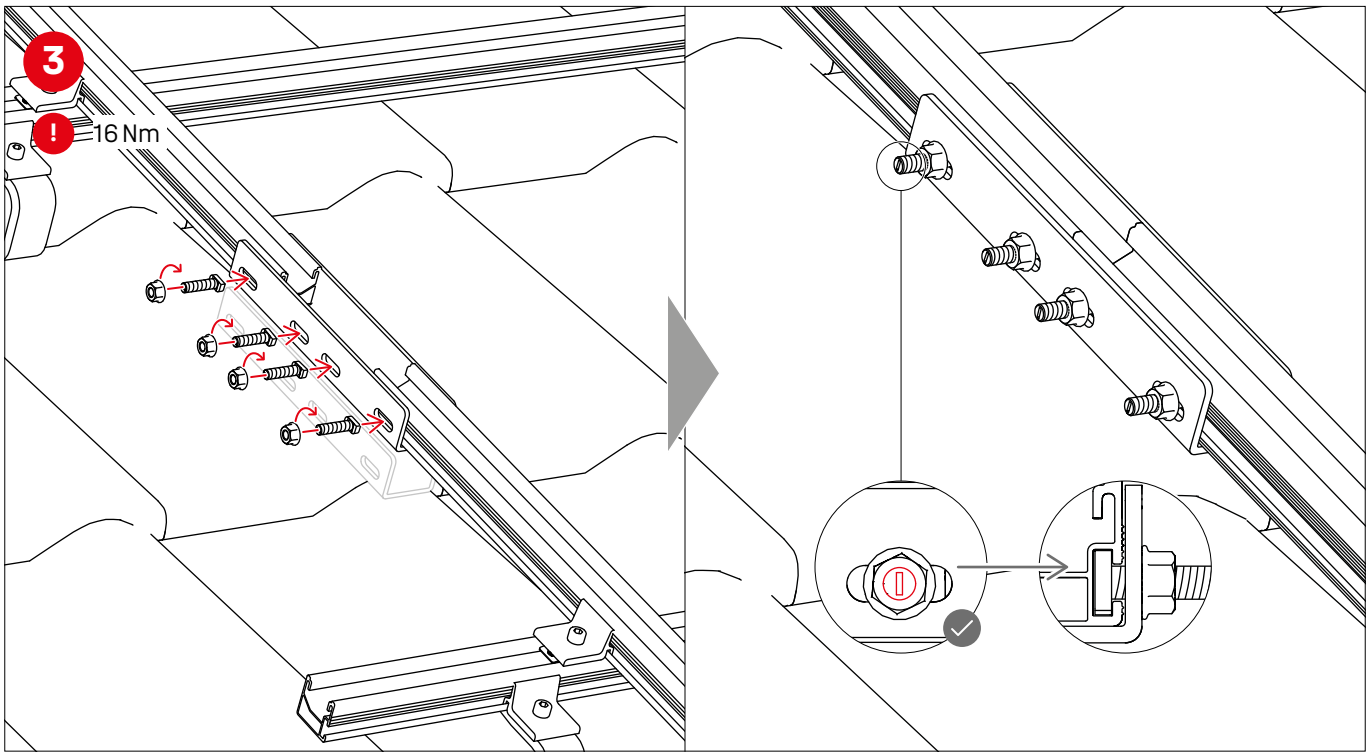
3
16 Nm

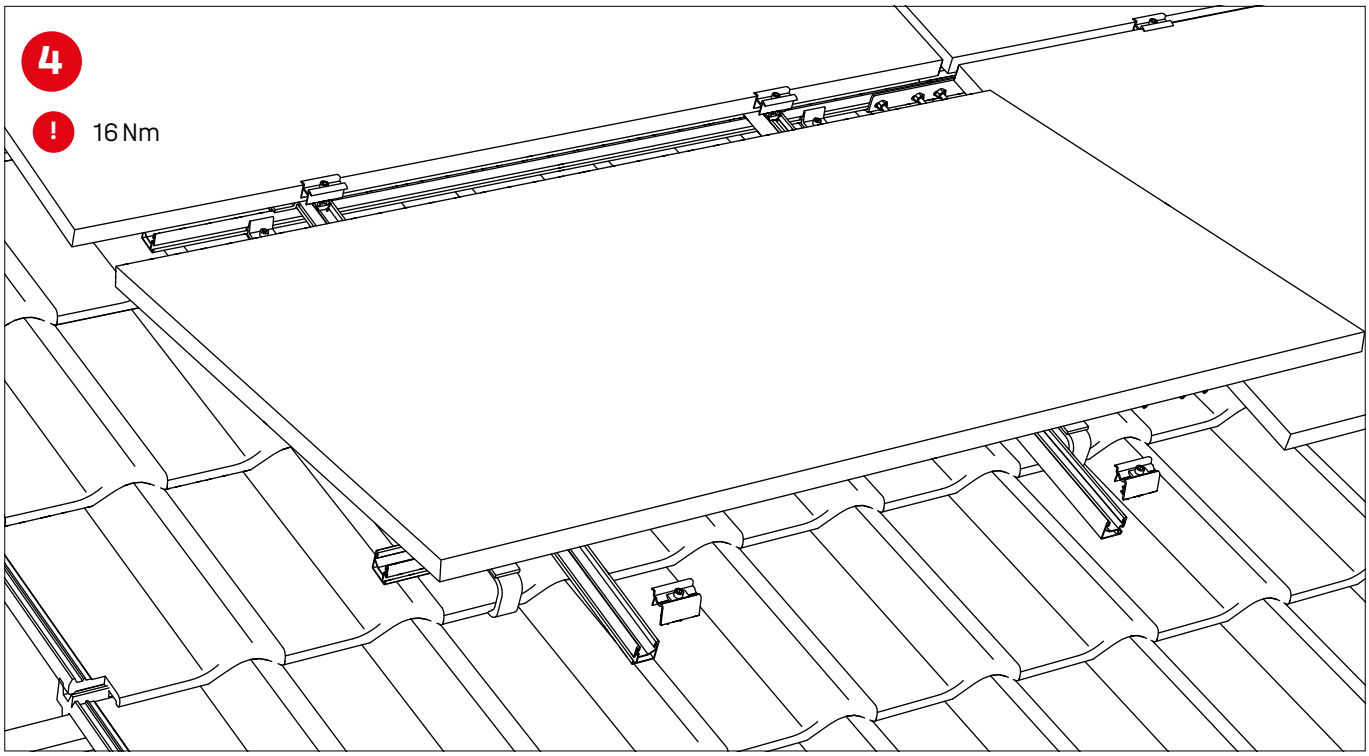
4
16 Nm

Thermal separations for 2-layer rails

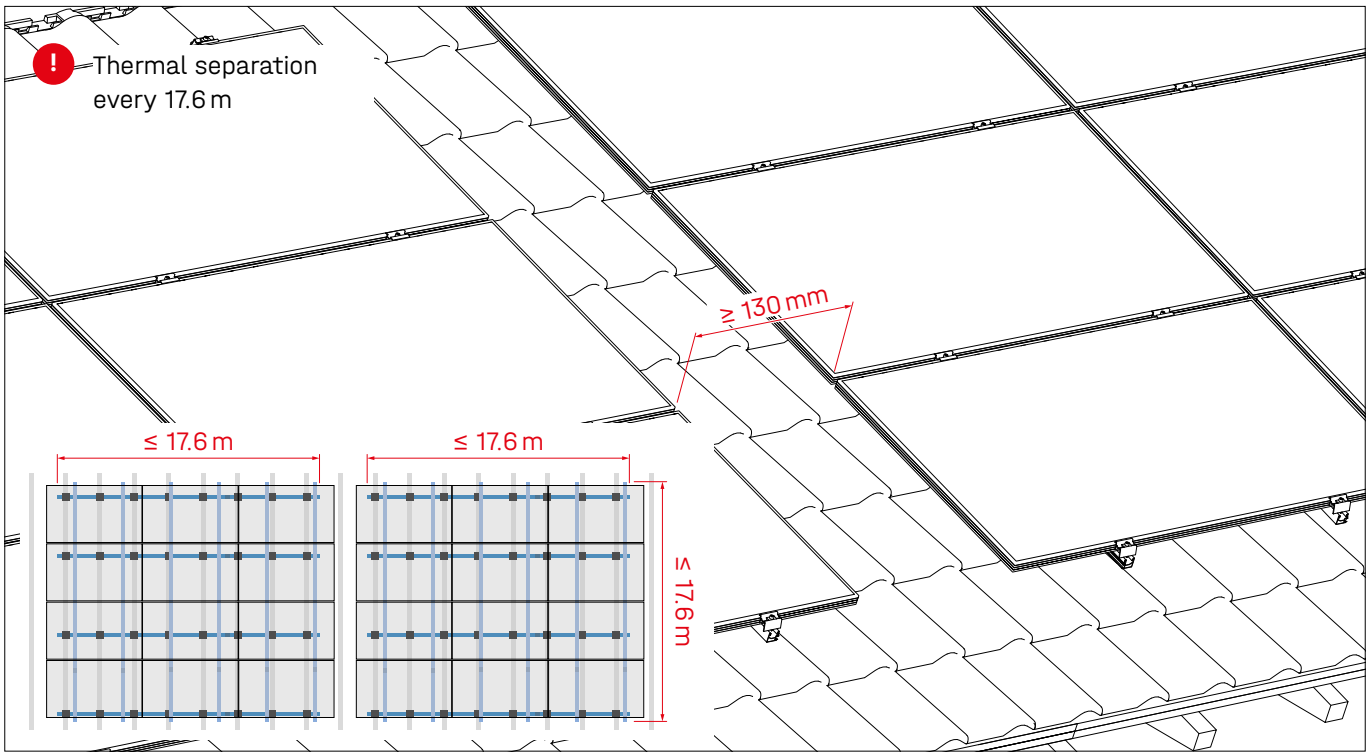

Obstructions / roof edge: Use of SingleBoards

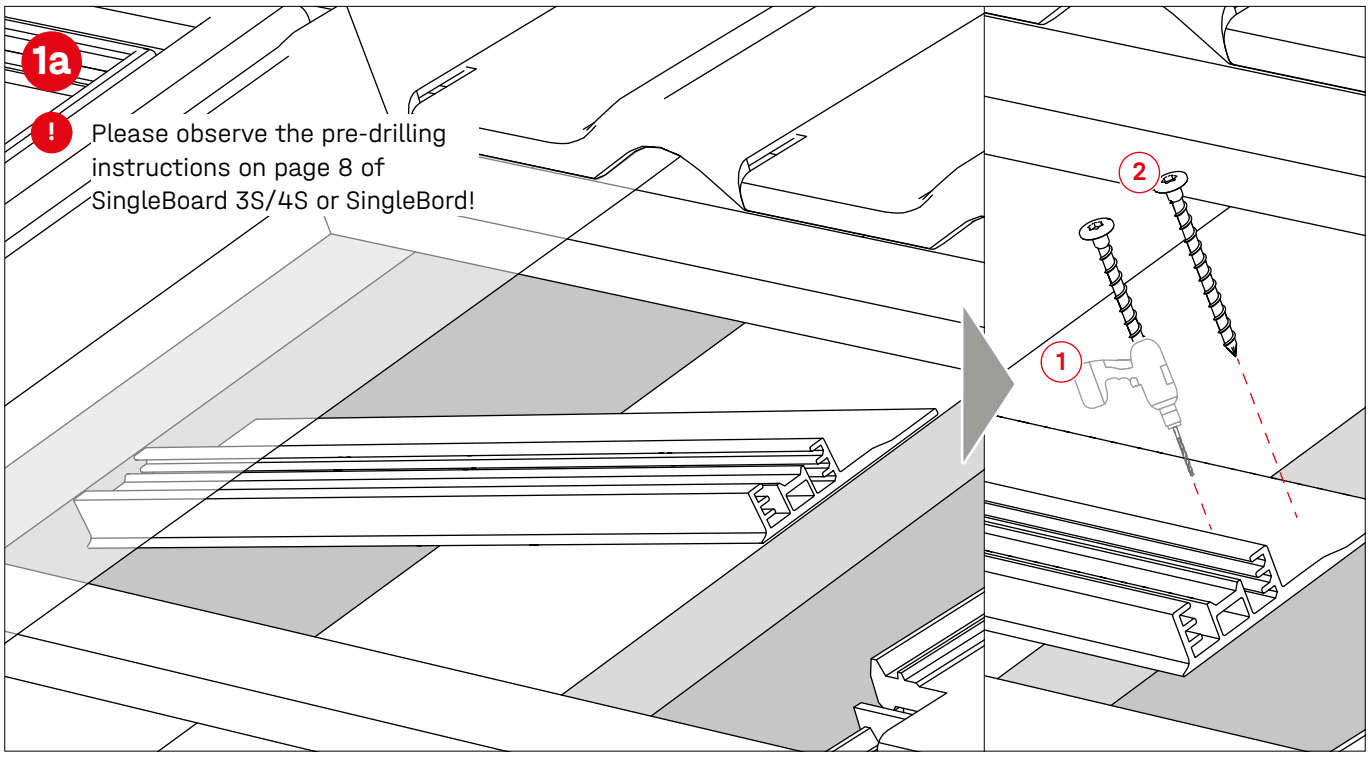

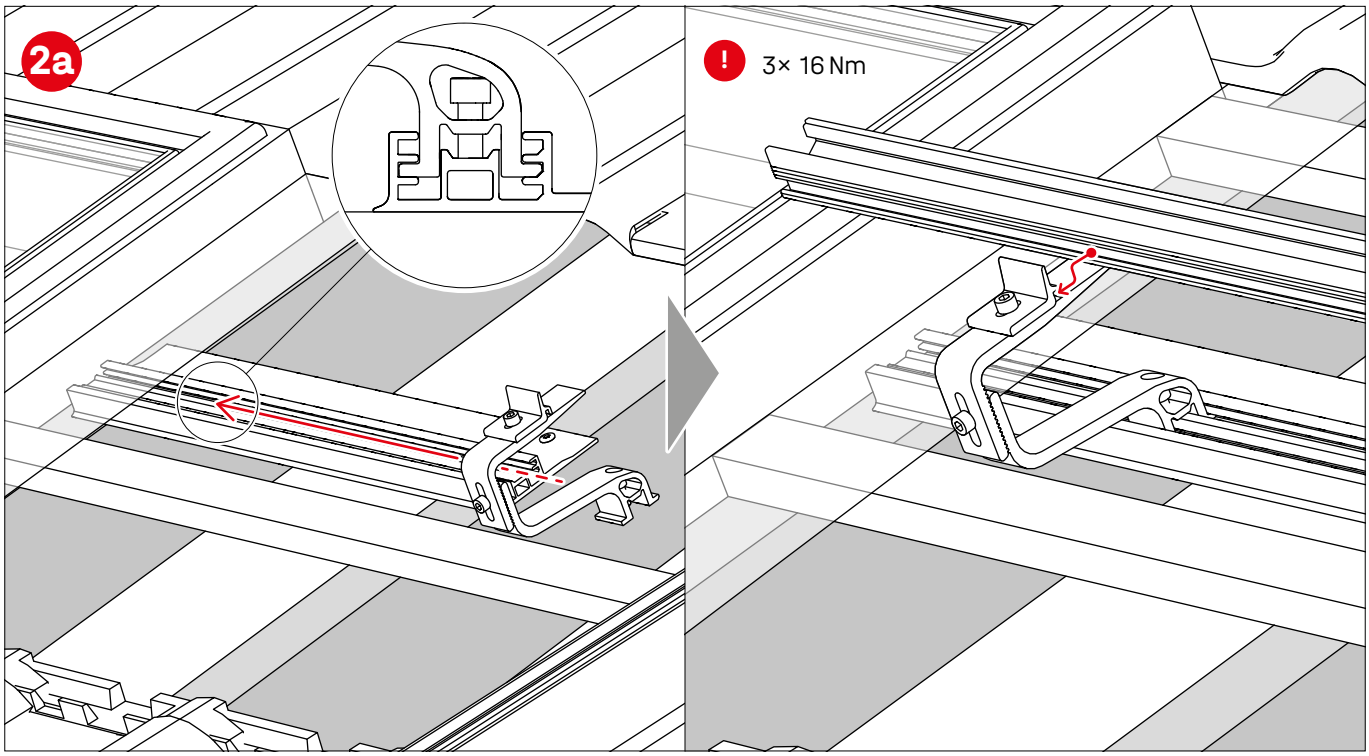

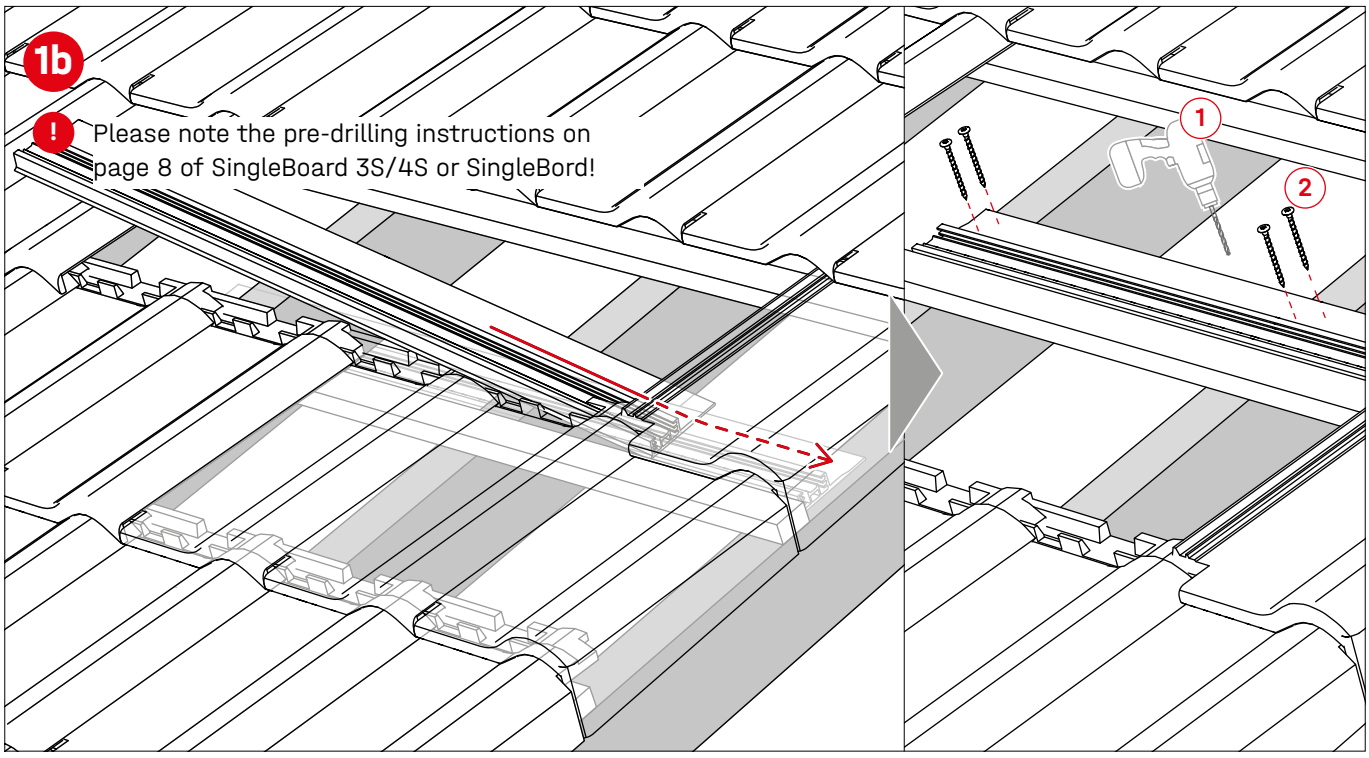
1b
Please note the pre-drilling instructions on page 8 of SingleBoard 3S/4S or SingleBord!
1
2

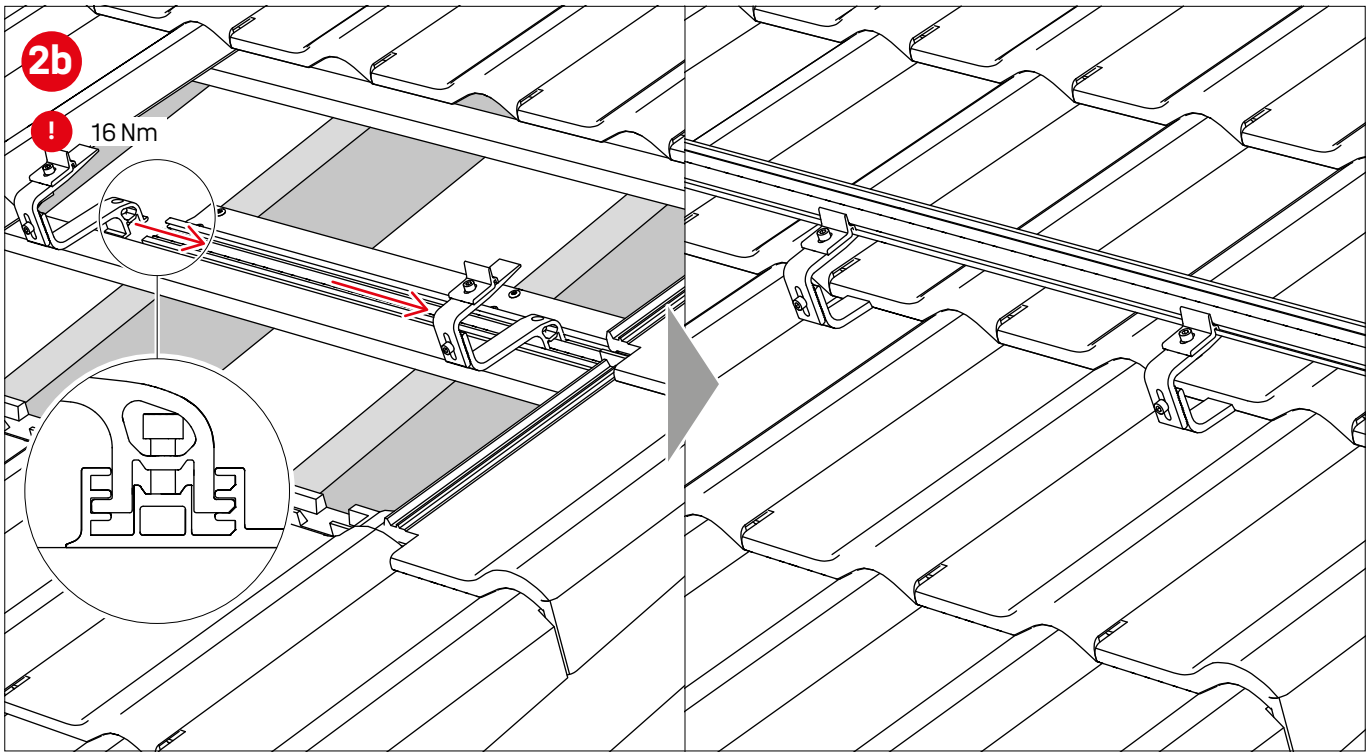
2b
16 Nm

Compensate and underlay height differences

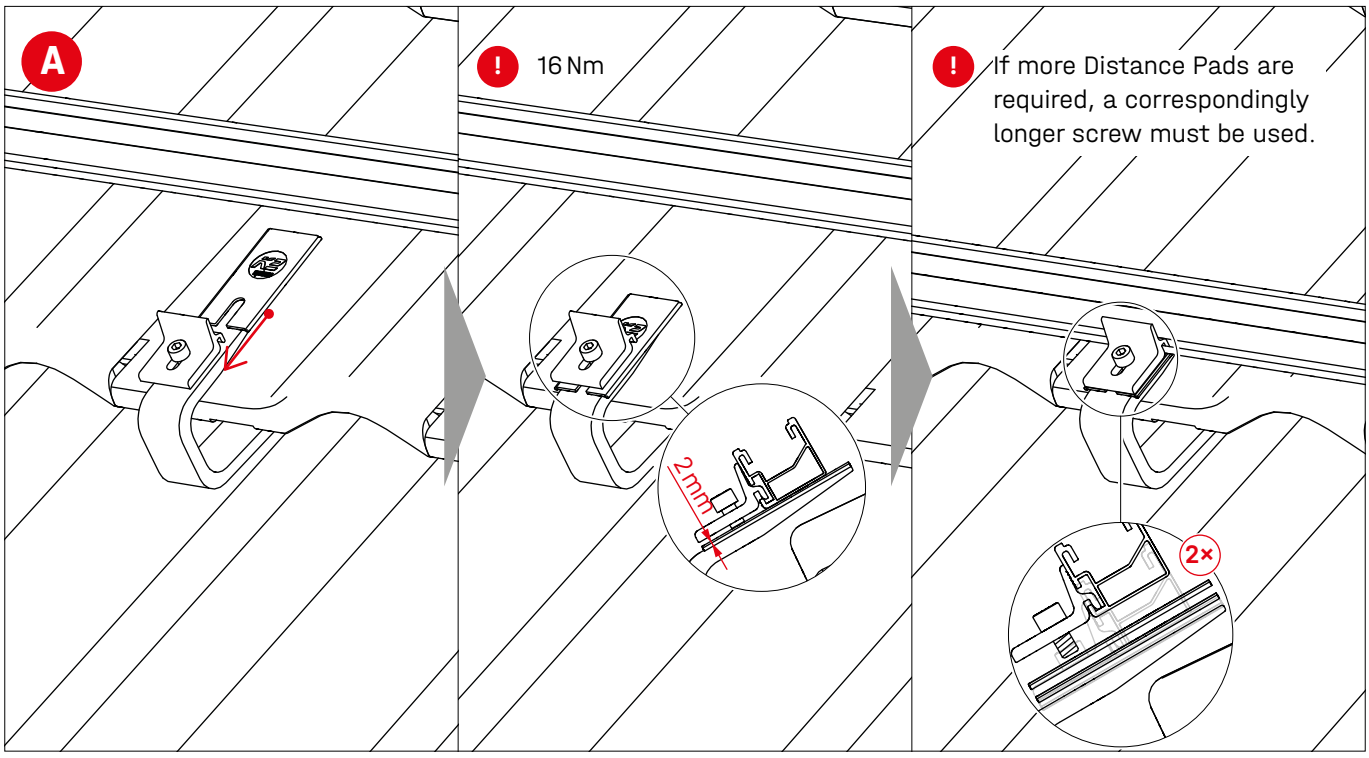

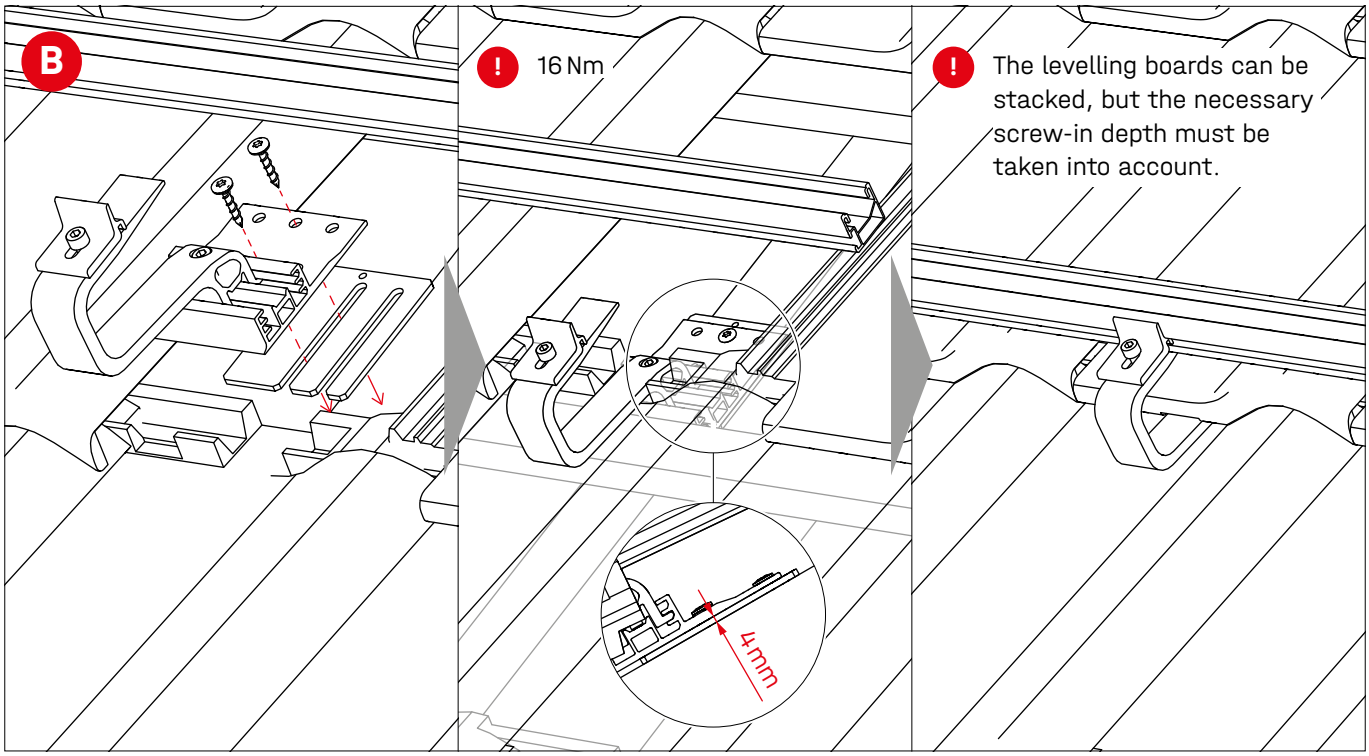

Attach BlackCover and EndCap

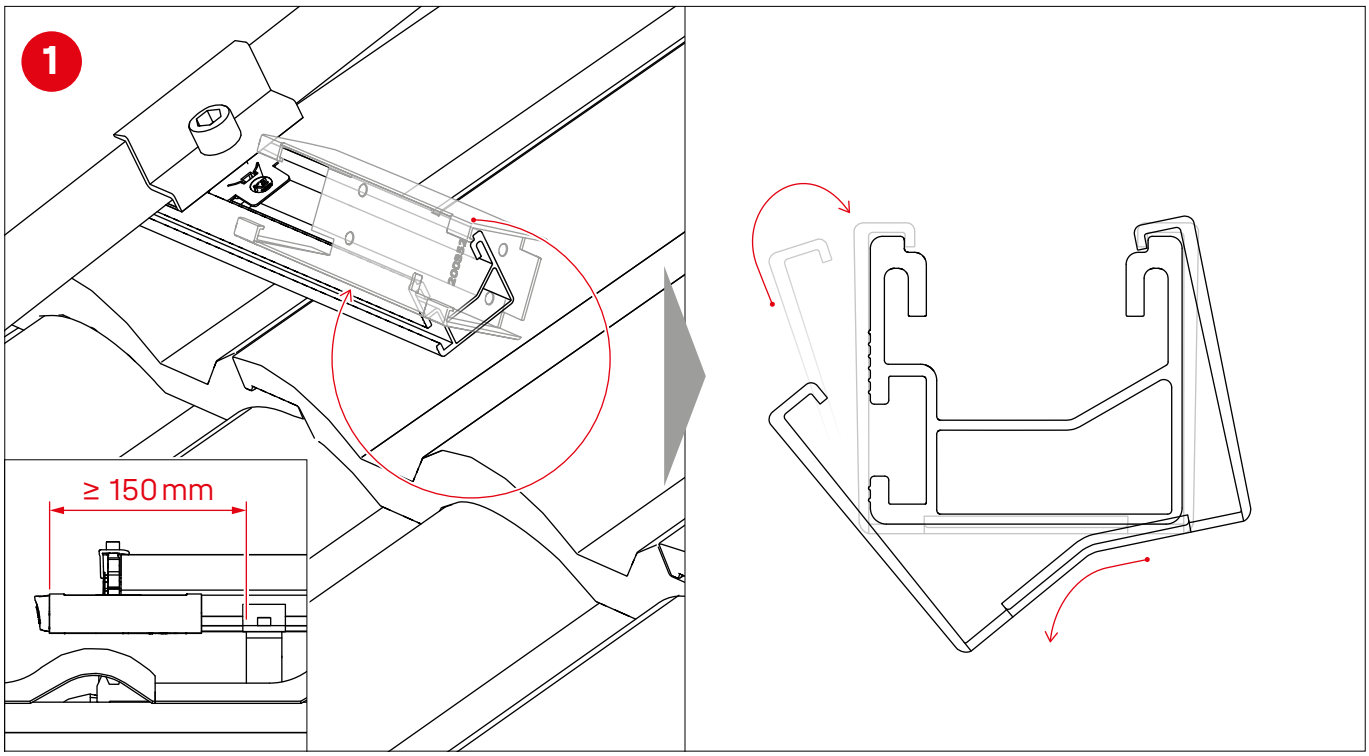

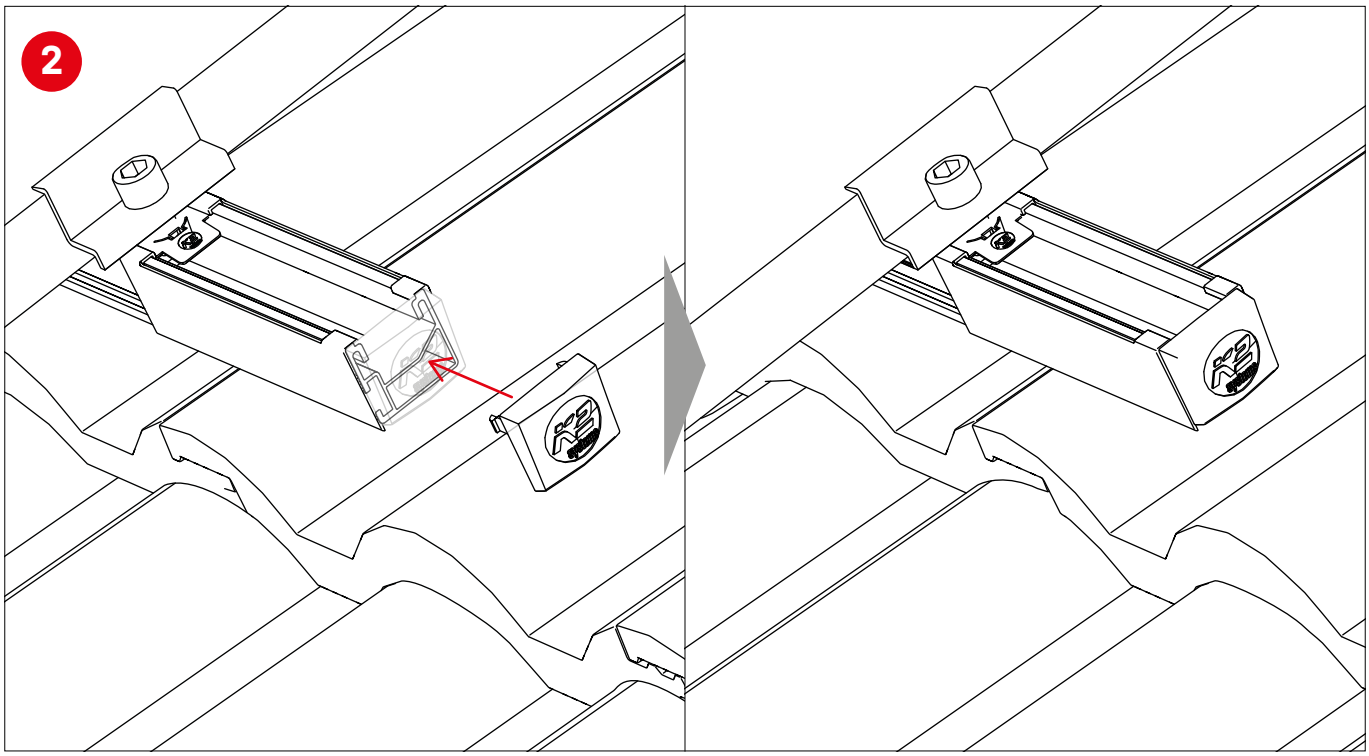

Notes

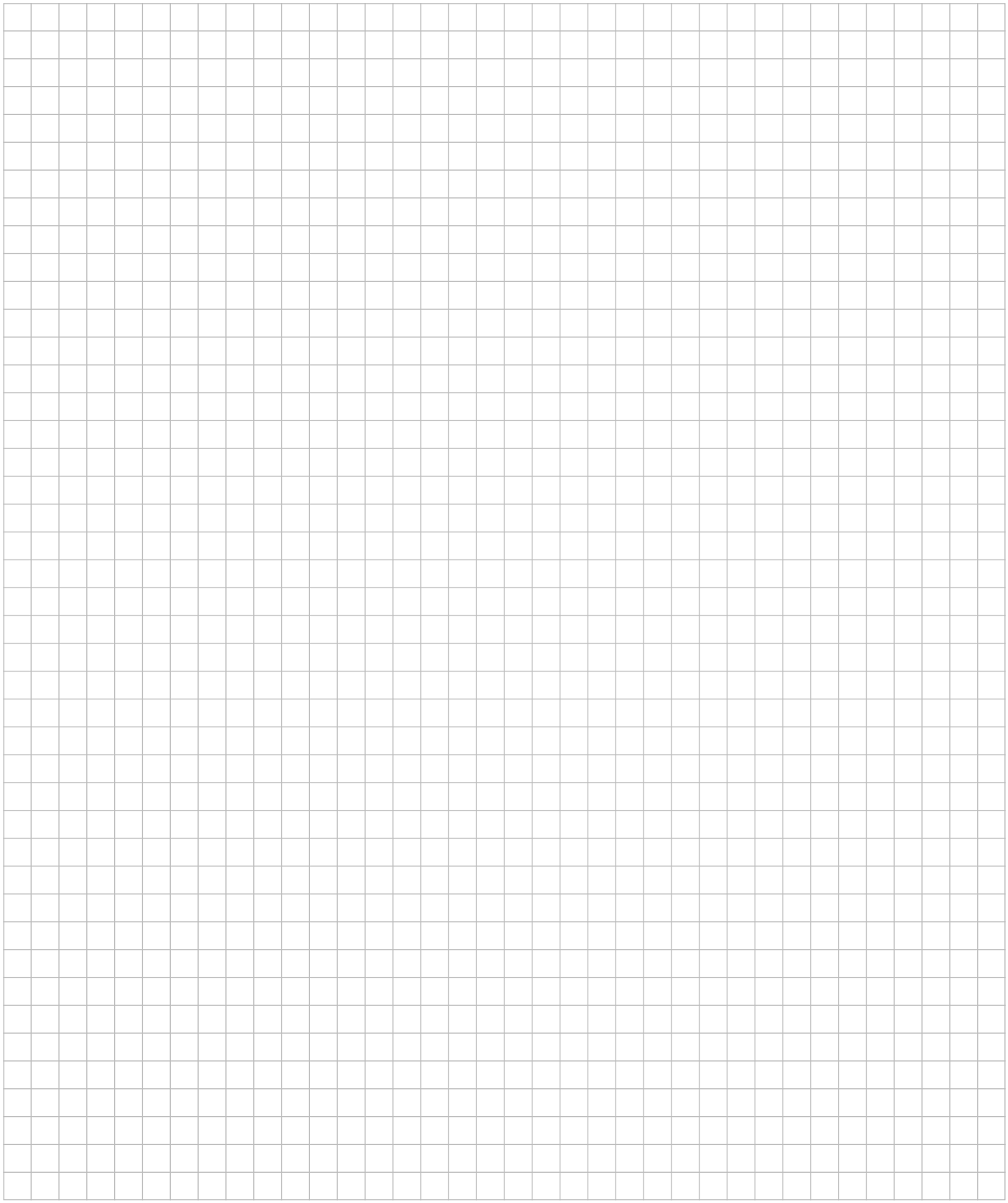

Thank you for choosing a K2 mounting system.

Systems from K2 Systems are quick and easy to install. We hope these instructions have helped. Please contact us with any questions or suggestions for improvement.
Our contact data:

- **k2-systems.com/en/contact**
- **Service Hotline: +49 (0)7159 42059-0**

German law shall apply excluding the UN Convention on CISG. Place of venue is Stuttgart.

K2 Systems GmbH
Industriestraße 18 · 71272 Renningen · Germany
+49 (0) 7159 - 42059 - 0 · info@k2-systems.com · k2-systems.com

SingleRail Roof Hooks Assembly EN V11 | 0424 · Subject to change
Product illustrations are exemplary and may differ from the original.