We support PV systems

TiltUp Vento System

ASSEMBLY INSTRUCTIONS

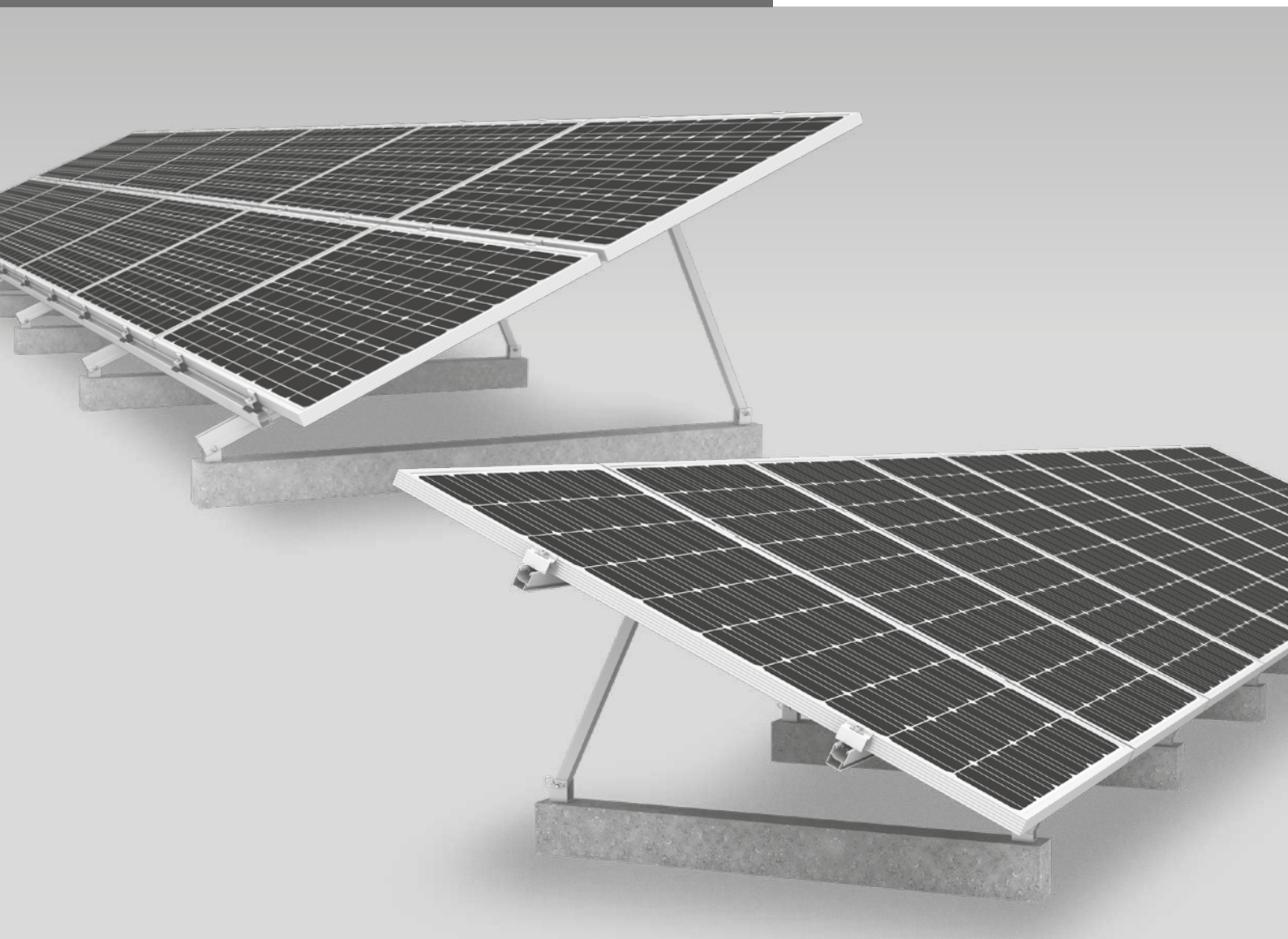

Content

/ Tools overview 3

/ General safety information 4

/ The following guidelines apply 5
- Planning with K2 Base 5
- Roof requirements 5
- Static requirements 5
- Important mounting instructions 5

/ Components 6
- Basic and portrait components 6
- Landscape single row 8
- Landscape double row 9
- Landscape single row with AddOn 10
- Landscape double row with AddOn 11

/ Assembly dimensions and ballast 12
- Cantilever and Span width 12
- Module orientation: Portrait 13
- Module orientation: Landscape single row 14
- Module orientation: Landscape double row 14
- Module orientation: Landscape single row with AddOn 15
- Module orientation: Landscape double row with AddOn 15
- Ballast scheme: Naming and allocation 16
- Requirement for the ballast 17

/ Assembly 18
- Basic steps 18
- Portrait assembly 21
- Landscape assembly, single row 21
- Landscape assembly, double row 22
- Landscape assembly, single row with AddOn 22
- Landscape assembly, double row with AddOn 23

Quality tested – several certifications

K2 Systems stands for secure connections, highest quality and precision. Our customers and business partners have known that for a long time. Independent institutes have tested, confirmed and certified our capabilities and components.

Please find our quality and product certificates under:
k2-systems.com/en/technical-information

Tools overview

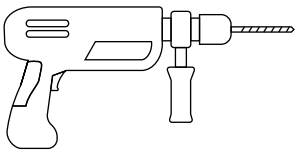

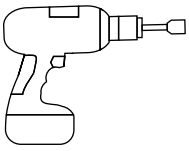

6 mm

10 mm
13 mm



6 mm

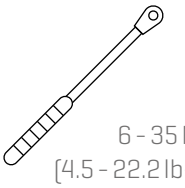

6 - 35 Nm
(4.5 - 22.2 lb-ft)

6 mm

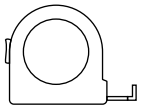

≥ 3.0 m



≥ 6.0 m

Digital Toolbox

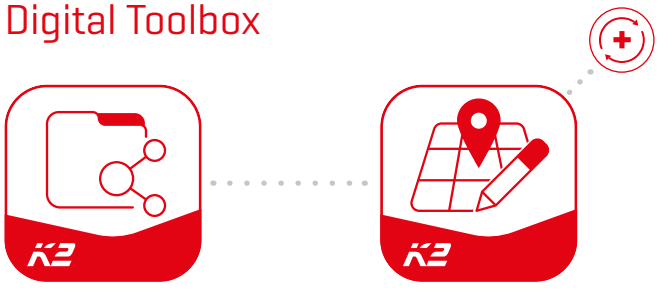

Do you already know our digital services? Use our K2 DocuApp now and record the first important data directly at the customer or project site. Simply transfer the data to our online planning software K2 Base. Here you can plan your project easily, safely and quickly. You receive a detailed project report with assembly plan and static report.
The K2+ interface enables seamless project data transfer to the planning tools of other manufacturers. With the K2 DocuApp, project documentation is done quickly and easily – without annoying paperwork.

Get started and register now:

base.k2-systems.com

docuapp.k2-systems.com

General safety information

Please note that our general mounting instructions must be followed at all times and can be viewed online at k2-systems.com/en/technical-information

- The equipment may only be installed and operated by qualified and adequately trained installers.
- Prior to installation, ensure that the product complies with on-site static loading requirements.
  For roof-mounted systems, the roof load-bearing capacity must always be checked.
- National and local building regulations and environmental requirements must be adhered to.
- Compliance with health and safety regulations, accident prevention guidelines and applicable standards is required.
  - Protective equipment such as safety helmet, boots and gloves must be worn.
  - Roofing works must be in accordance with roofing regulations utilising fall protection safeguards when eaves height exceeds 3 m.
  - At least two people must be present for the duration of the installation work in order to provide rapid assistance in the event of an emergency.
- K2 mounting systems are continuously developed and improved and the installation process may thereby change at any time. Prior to installation consult our website at www.k2-systems.com/en/technical-information for up-to-date instructions.
  We can send you the latest version on request.
- The assembly instructions of the module manufacturer must be adhered to.
- Equipotential bonding/grounding/earthing between individual parts is to be performed according to country specific standards, as well as national laws and regulations.
- At least one copy of the assembly instructions should be available on site throughout the duration of the installation.
- Failure to adhere to our general safety and assembly instructions and not using all system components, K2 is not liable for any resulting defects or damages. We do not accept liability for any damage resulting in the use of competitor's parts. Warranty is excluded in such cases.
- K2 Systems GmbH reserves the right to exclude liability in case of disregard of our General Safety Instructions as well as in case of installation or mounting of components of a competitor.
- If all safety instructions are adhered to and the system is correctly installed, there is a product warranty entitlement of 12 years! We strongly recommend reviewing our terms of guarantee, which can be viewed at www.k2-systems.com/en/technical-information
  We will also send this information on request.
- Dismantling of the system is performed in reverse order to the assembly.
- K2 stainless steel components are available in different corrosion resistance classes. Each structure or component must be carefully checked for possible corrosion exposure.

The following guidelines apply

The TiltUp Vento system can be installed as standard under the following conditions. Even if the system is capable of meeting higher demands through the integration of safety standards, please get in touch with your contact at K2 Systems if the specified values are exceeded.

Planning with K2 Base

We recommend our free online software K2 Base for the planning. In five steps, you can plan the right assembly system and get a construction recommendation, parts list and the structural analysis report. Simply register and start planning: base.k2-systems.com

Roof requirements

This system can be positioned on all common flat roofs with a pressure-resistant base and a roof pitch of ≤ 3° with ballast.

Static requirements

- It is essential to check that the roof structure has sufficient residual load capacity and that the pressure capacity of the roof insulation (where present) is not exceeded.
- Suitable for framed modules with a frame height 30 - 50 mm
- Permissible module dimensions: length 1386 – 2293 mm, width 950 - 1400 mm

Important mounting instructions

Mounting system

- The inclination of the TiltUp Vento system is either 20, 25 or 30°.
- A minimum quantity of triangles is two
- A minimum distance to the roof edge of 600 mm must be observed.
- Ensure a thermal separation (distance between module arrays) after a maximum of 15 m in the module row direction and in the direction of the base rail.
- In the event of exceptional circumstances (such as storms, heavy rain, earthquakes, etc.), the system should be checked by a specialist. Should an inspection find damage or plastic deformation (such as in the module clamp area) the components must be replaced.

Modules and clamping

- Tightening torque of 14 Nm for all module clamps
- Adhere to module manufacturer recommendations for clamping area and module installation (see module manufacturer instructions).

General information

- External influences that act on this system are only reflected in the design of the ballast to a limited degree. For instance, unevenness, thermal elongation, moss, water accumulation and ageing of the sheeting cannot be considered, although these factors might also precipitate system displacement under certain circumstances. We recommend you check whether the system requires additional mechanical attachment, as the impact of these influences may be greater on slanted roofs.
- It is important to ensure that the rain water flow is not hindered.
- On-site general standards and regulations for lightning protection must be observed and consultation with a specialist to create a lightning protection concept is recommended (use lightning protection clamp if necessary).

Components

Basic and portrait components

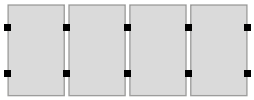

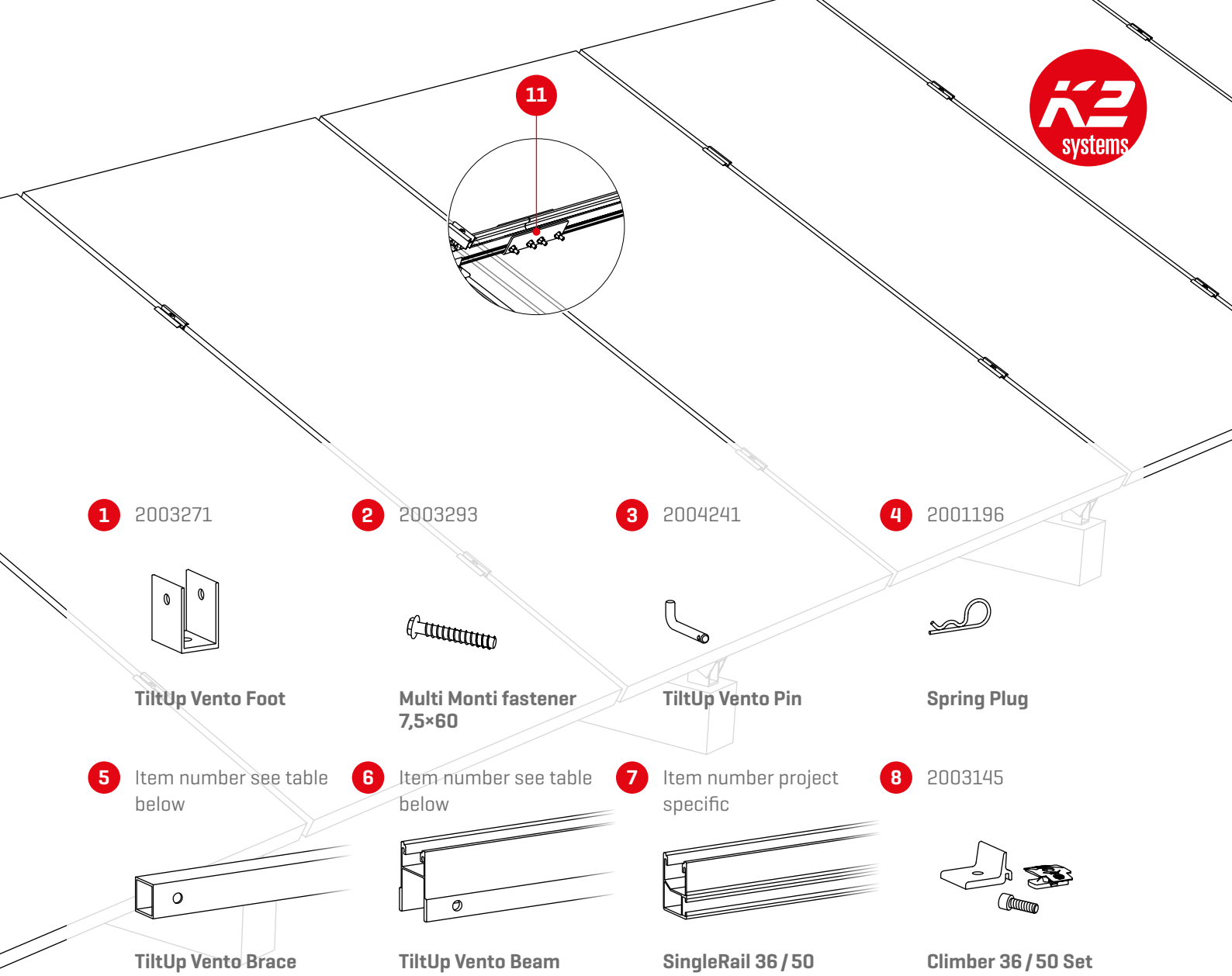

1 2003271

TiltUp Vento Foot

2 2003293

Multi Monti fastener 7,5×60

3 2004241

TiltUp Vento Pin

4 2001196

Spring Plug

5 Item number see table below

TiltUp Vento Brace

6 Item number see table below

TiltUp Vento Beam

7 Item number project specific

SingleRail 36 / 50

8 2003145

Climber 36 / 50 Set

9 2003451 / 2003452



K2 Clamp EC 30 - 40, Hybrid, silver / black

2002514 / 2002589



OneEnd 30 - 42 silver / black

10 2004146 / 2004148



K2 Clamp MC 25 - 40 silver / black

2003071 / 2003072



OneMid 30 - 42 silver / black

11 2001976 / 2002404

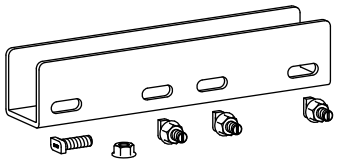

SingleRail 36 / 50 Connector Set

Item numbers Brace / Beam

Module length [mm]	Inclination	TiltUp Vento Brace		TiltUp Vento Beam	
		length [mm]	Item No.	length [mm]	Item No.
1,386 - 1,751	20°	446	2003269	1,300	2003263
	25°	558	2003268		
	30°	679	2003267		
1,752 – 2,293	20°	558	2003268	1,600	2003262
	25°	679	2003267		
	30°	856	2003266		

Landscape single row

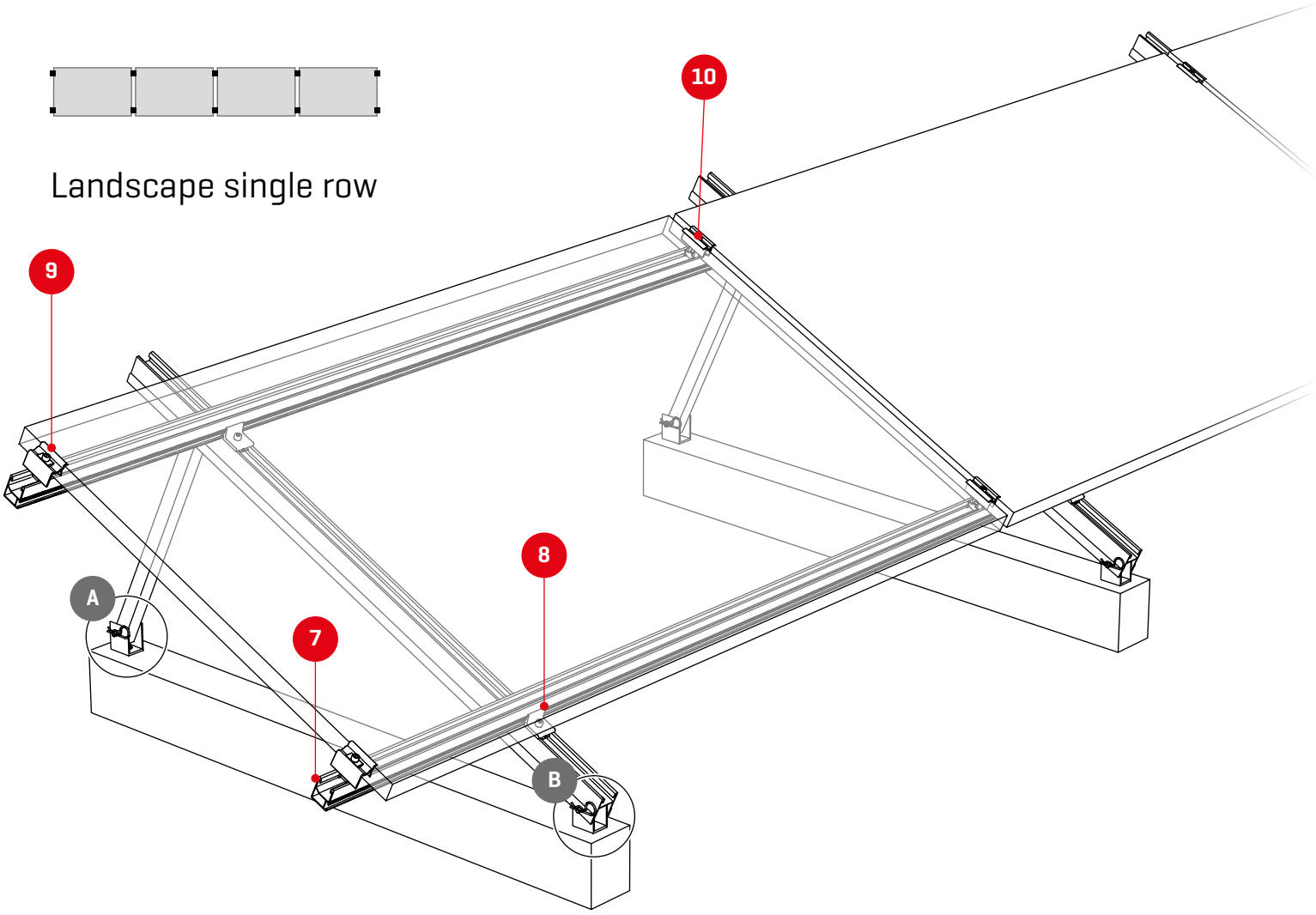

A See p. 6 / 7

B See p. 6 / 7

5 Item number see table below
TiltUp Vento Brace

6 Item number see table below
TiltUp Vento Beam

7 Item number project specific
SingleRail 36 / 50

8 2003145
Climber 36 / 50 Set

9 Item number project specific
Module end clamp

10 Item number project specific
Module middle clamp

Item numbers Brace / Beam

Module width [mm]	Inclination	TiltUp Vento Brace		TiltUp Vento Beam	
		length [mm]	Item No.	length [mm]	Item No.
950 – 1,350	20°	446	2003269	1,300	2003263
	25°	558	2003268		
	30°	679	2003267		



Landscape double row

A See p. 6 / 7

B See p. 6 / 7

5 Item number see table below
TiltUp Vento Brace

6 Item number see table below
TiltUp Vento Beam

7 Item number project specific
SingleRail 36 / 50

8 2003145
Climber 36 / 50 Set

9 Item number project specific
Module end clamp

10 Item number project specific
Module middle clamp

Item numbers Brace / Beam

Module width [mm]	Inclination	TiltUp Vento Brace		TiltUp Vento Beam	
		length [mm]	Item No.	length [mm]	Item No.
950 – 1,135	20°	679	2003267	2,360	2003261
	25°	856	2003266		
	30°	1,047	2003265		

Landscape single row with AddOn

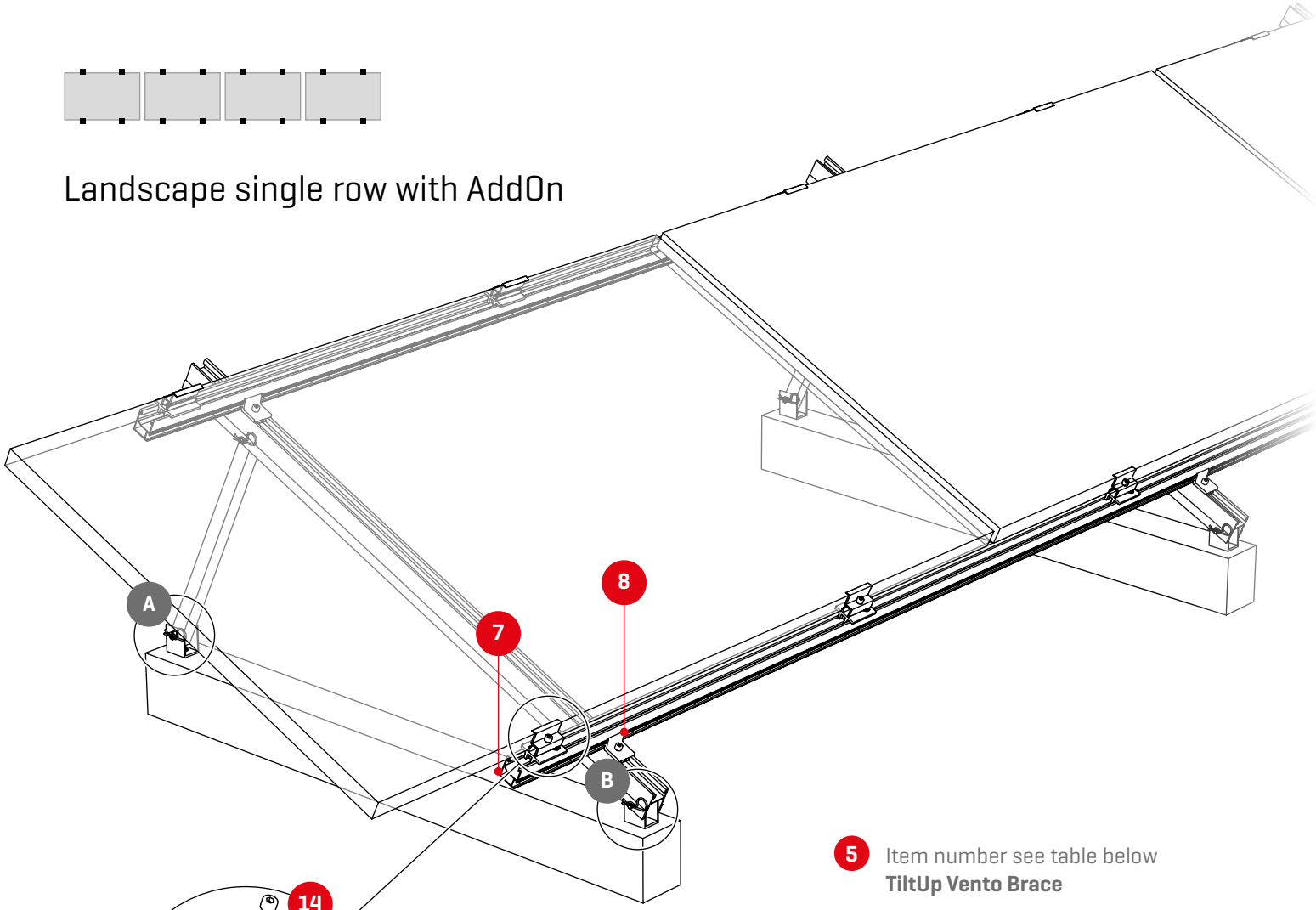

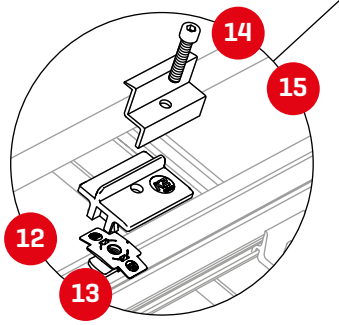

5 Item number see table below
TiltUp Vento Brace

6 Item number see table below
TiltUp Vento Beam

7 Item number project specific
SingleRail 36 / 50

8 2003145
Climber 36 / 50 Set

A See p. 6 / 7

B See p. 6 / 7

12 1001643 / 2000034



MK2

13 1005530 / 2001707

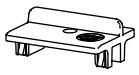

AddOn 22 / 30

14 Item number project specific

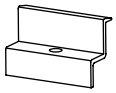

End Clamp

15 Item number project specific!



Socket head cap screw

Item numbers Brace / Beam

Module width [mm]	Inclination	TiltUp Vento Brace		TiltUp Vento Beam	
		length [mm]	Item No.	length [mm]	Item No.
950 – 1,135	20°	446	2003269	1,300	2003263
	25°	558	2003268		
	30°	679	2003267		

Landscape double row with AddOn

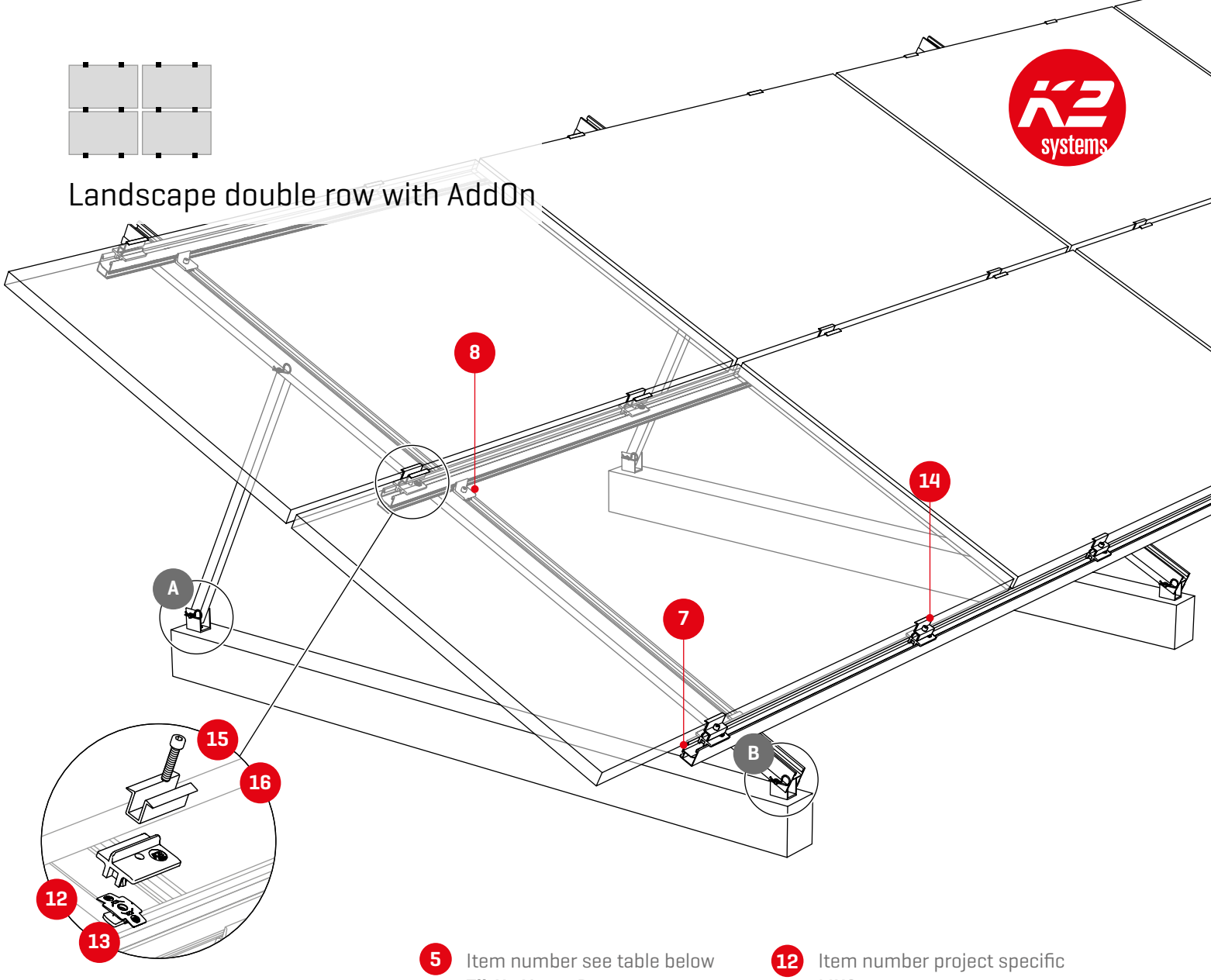

5 Item number see table below
TiltUp Vento Brace

6 Item number see table below
TiltUp Vento Beam

A See p. 6 / 7

7 Item number project specific
SingleRail 36 / 50

B See p. 6 / 7

8 2003145
Climber 36 / 50 Set

12 Item number project specific
MK2

13 1005530 / 2001707
AddOn 22 / 30

14 Item number project specific!
End Clamp

15 Item number project specific
Socket head cap screw

16 1005131

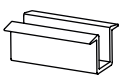

Middle Clamp

Item numbers Brace / Beam

Module width [mm]	Inclination	TiltUp Vento Brace		TiltUp Vento Beam	
		length [mm]	Item No.	length [mm]	Item No.
950 – 1,135	20°	679	2003267	2,360	2003261
	25°	856	2003266		
	30°	1,047	2003265		

Assembly dimensions and ballast

Mounting dimensions from K2 Base

K2 Base calculates all the following dimensions automatically and outputs them in the project report.
Please only use these dimensions for the assembly.

Cantilever and Span width

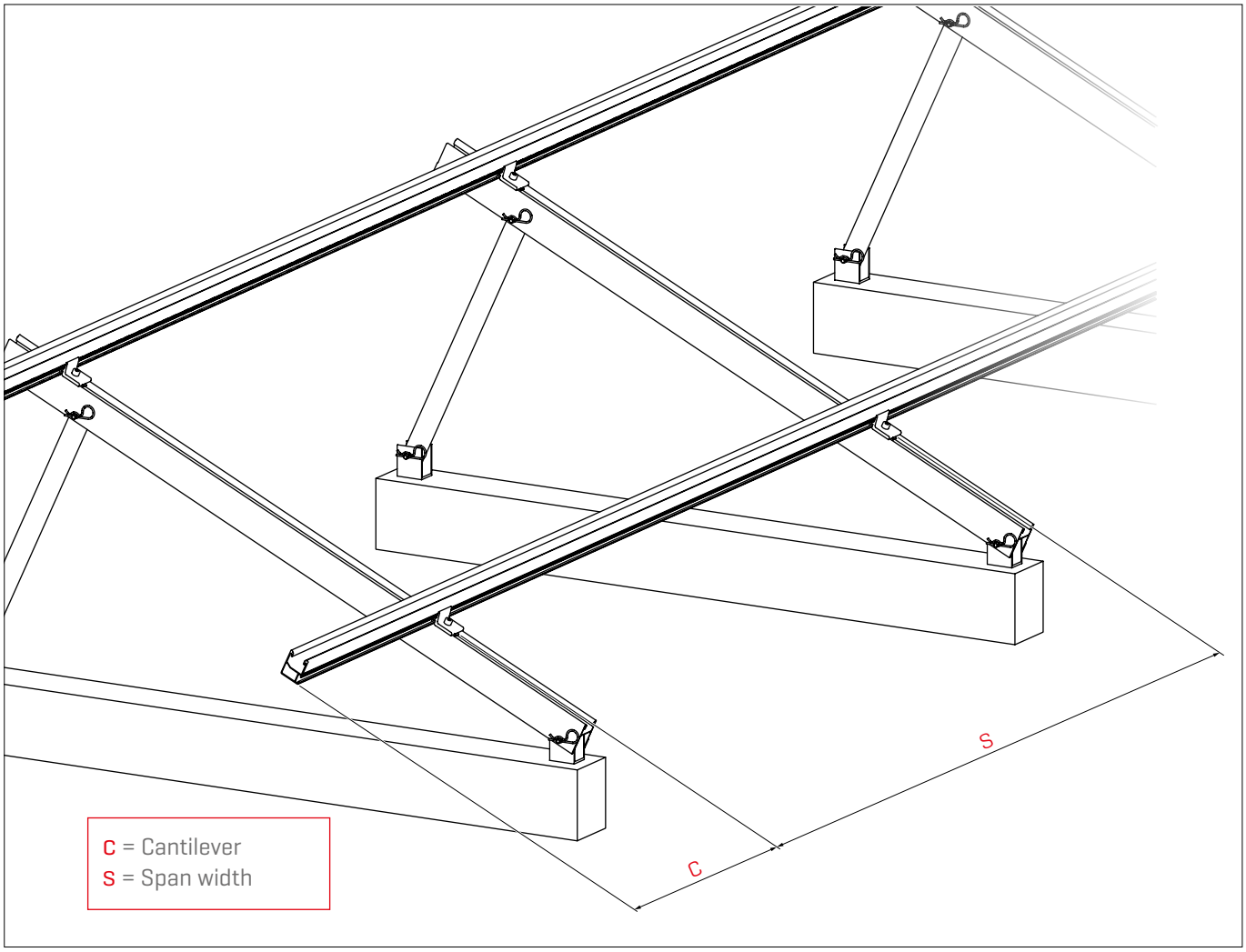

Module orientation: Portrait

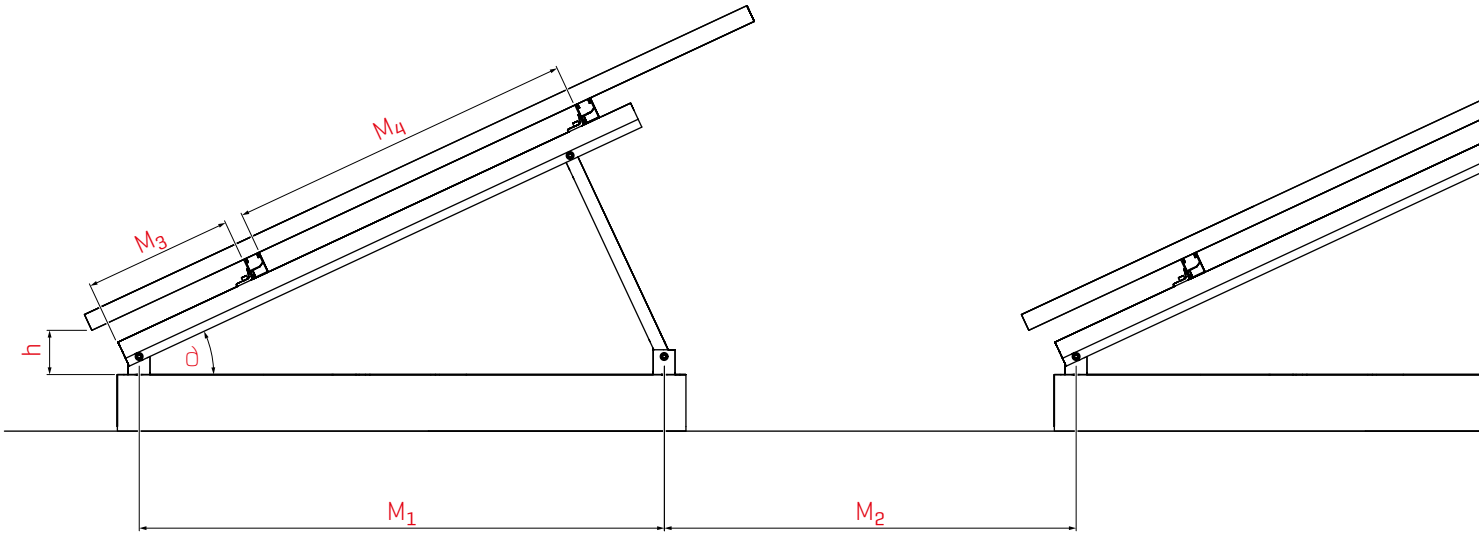

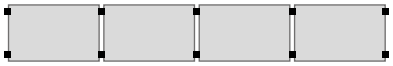

Module orientation: Landscape single row

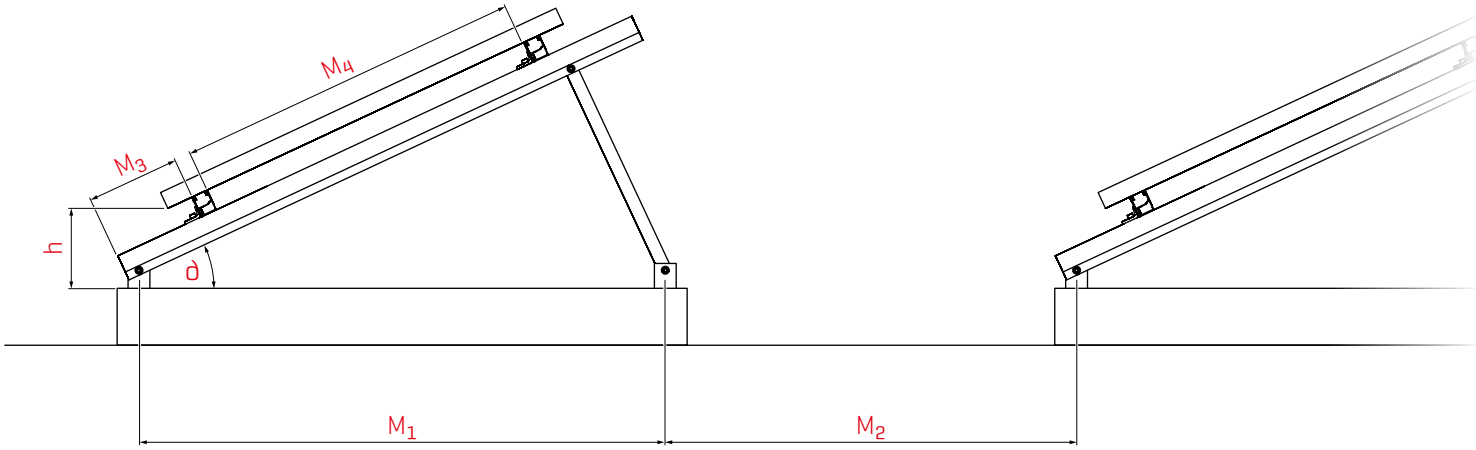



Module orientation: Landscape double row

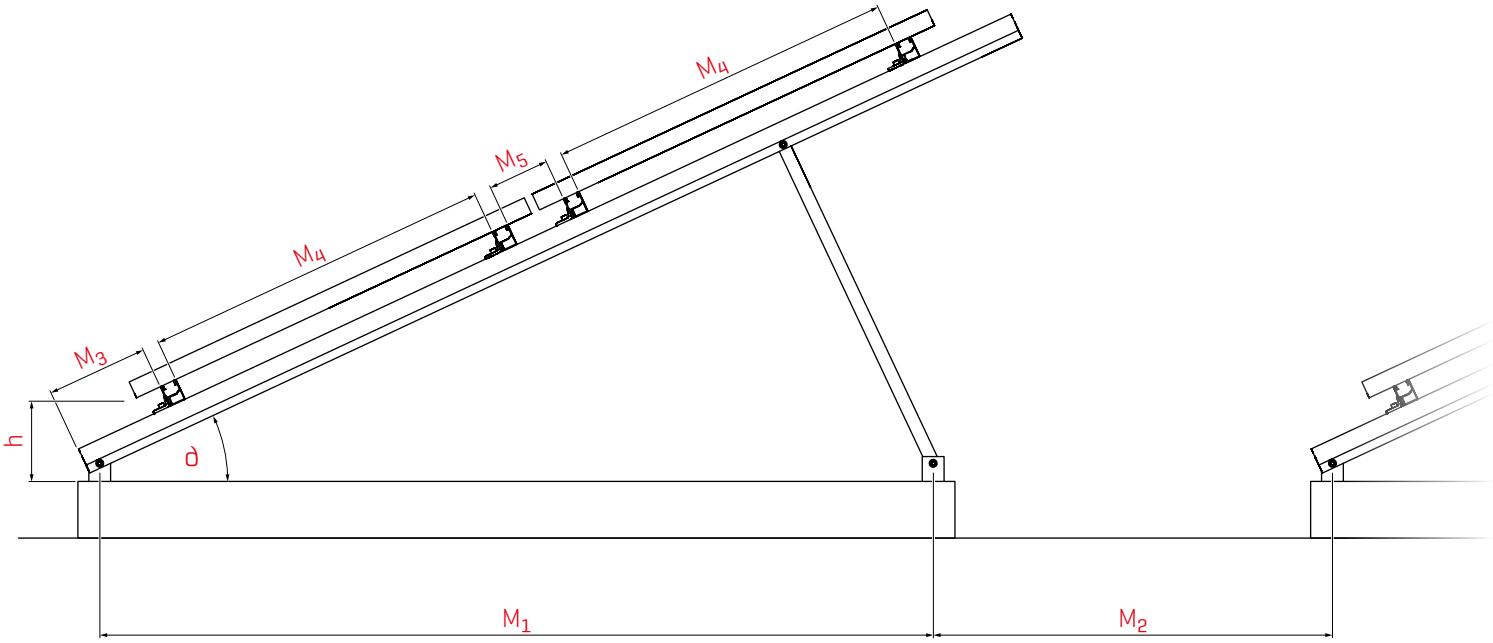

Module orientation: Landscape single row with AddOn

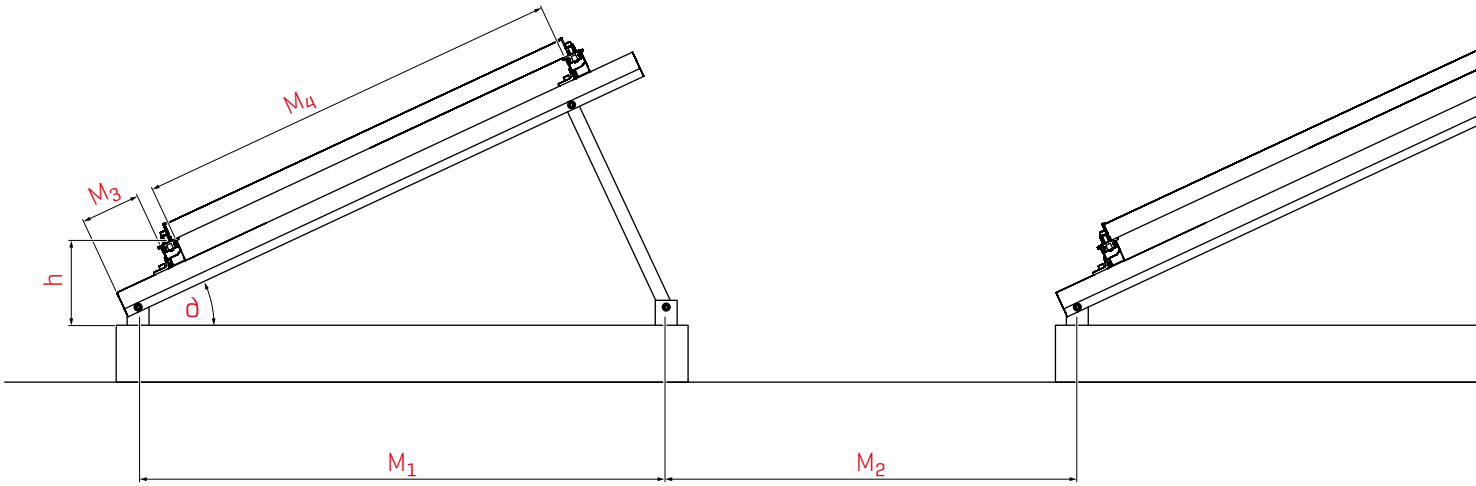

Module orientation: Landscape double row with AddOn

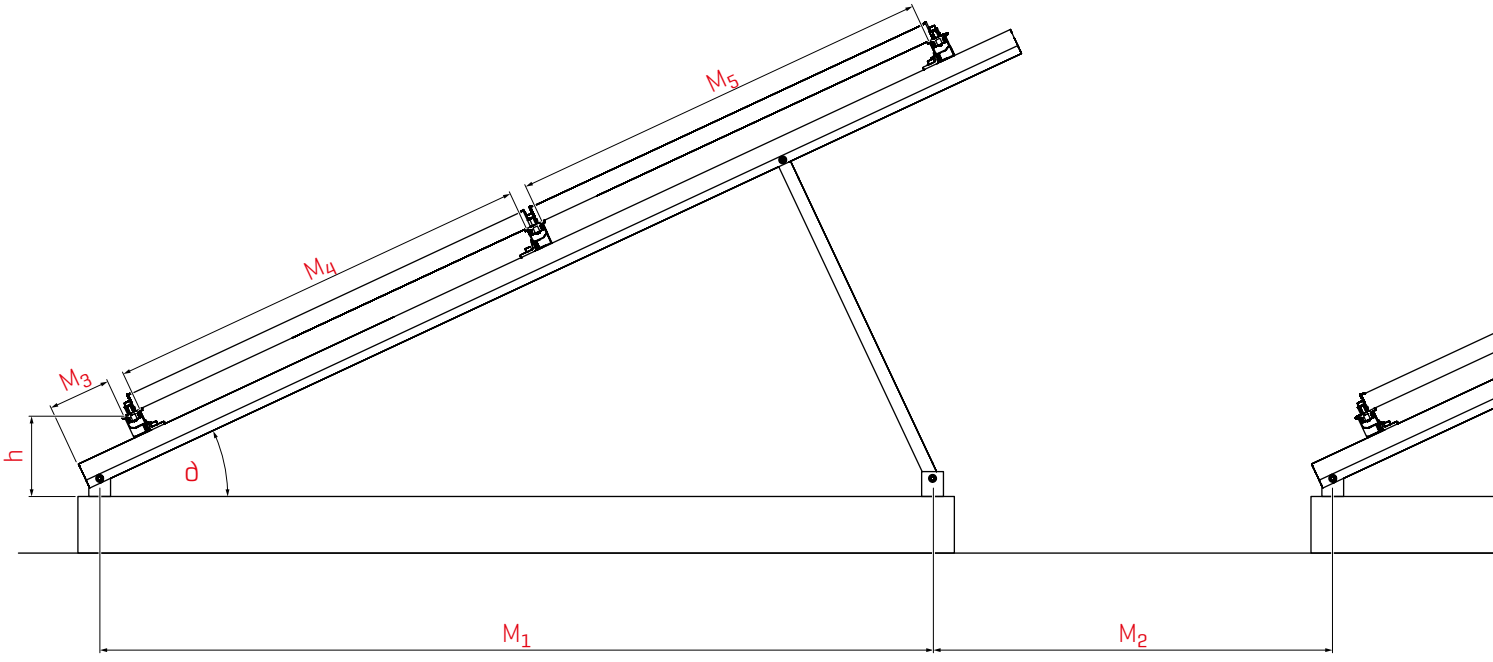

Ballast scheme: Naming and allocation

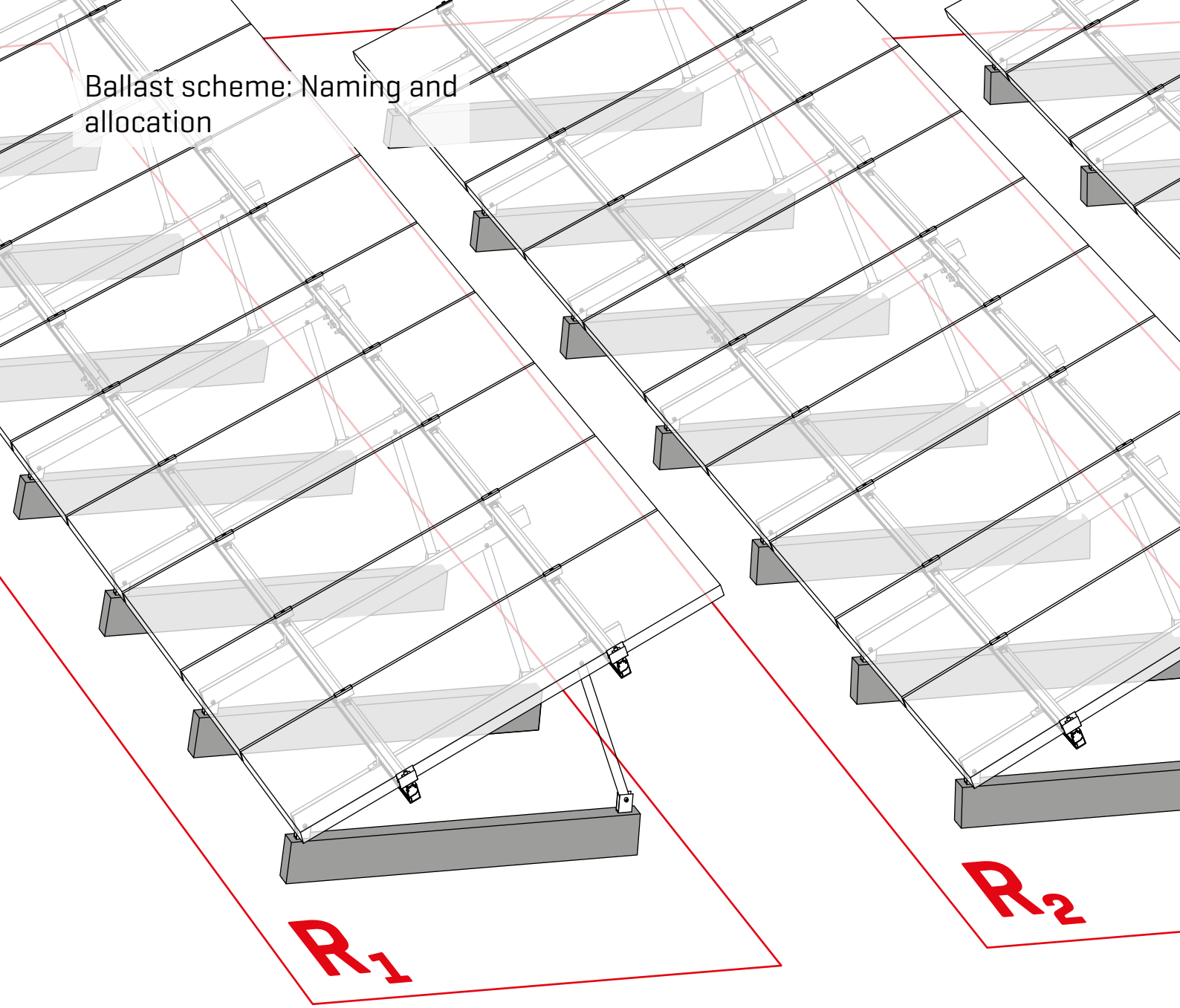

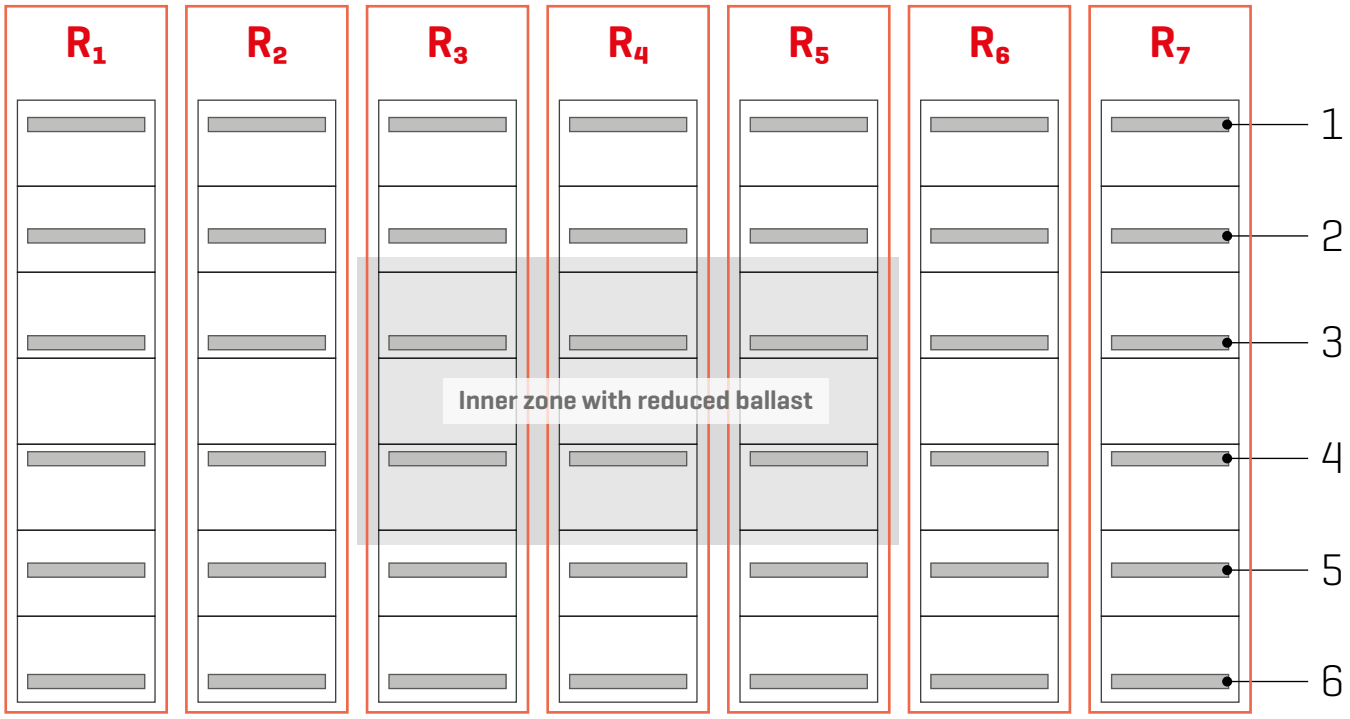

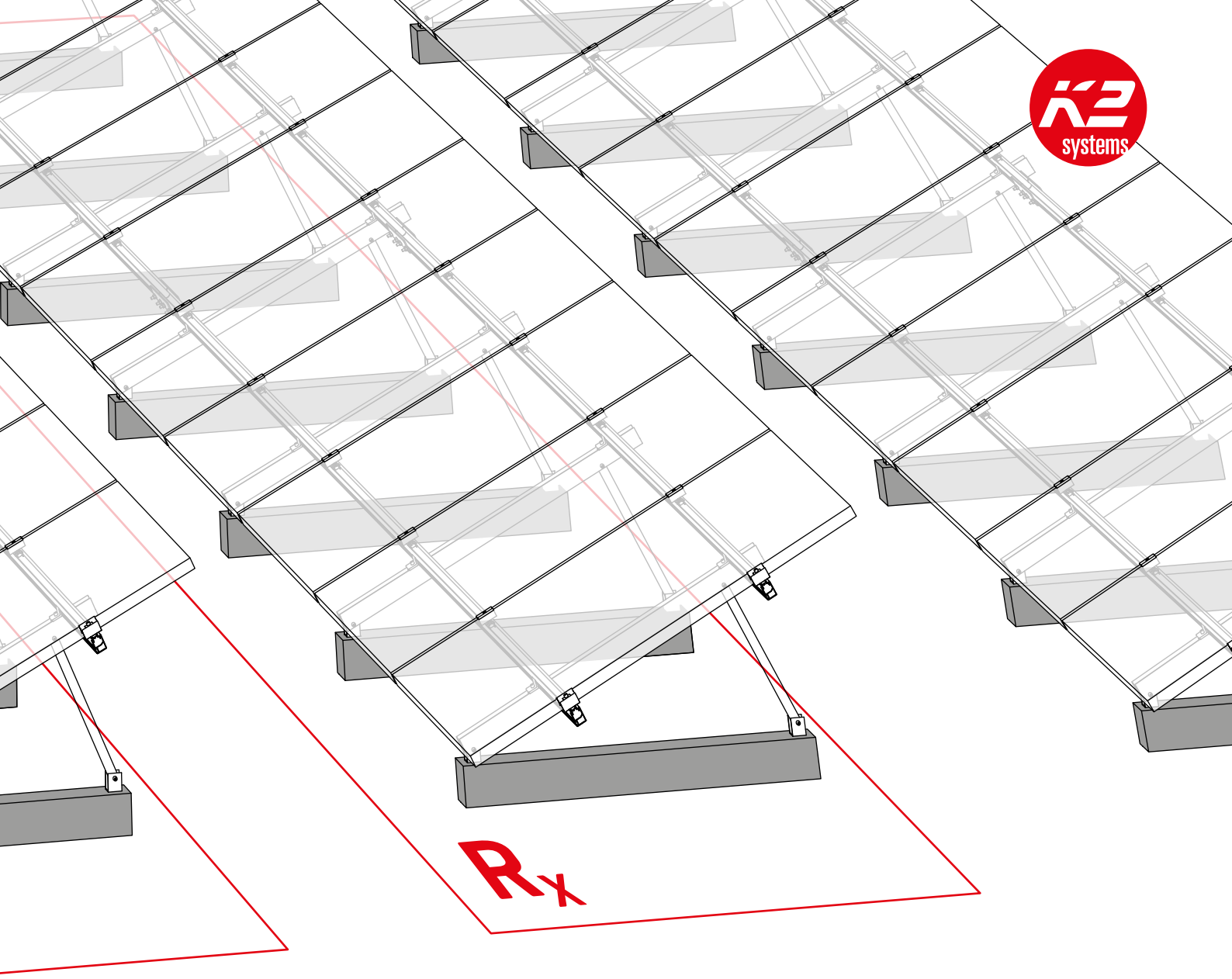

Report on the static calculation

You will receive a report from K2 Systems for each TiltUp Vento project. This includes a static analysis and tells you how the calculated ballastings are to be distributed in the module field and the individual module blocks.

Requirement for the ballast

- Arrange reinforcement of the concrete ledger according to static requirements.
- Information on concrete quality and reinforcement according to the manufacturer's specifications must be observed at the load application points.
- Observe minimum concrete quality, at least C20/25 or equivalent.
- If necessary, structural crack reinforcement must be provided.

Assembly

Basic steps

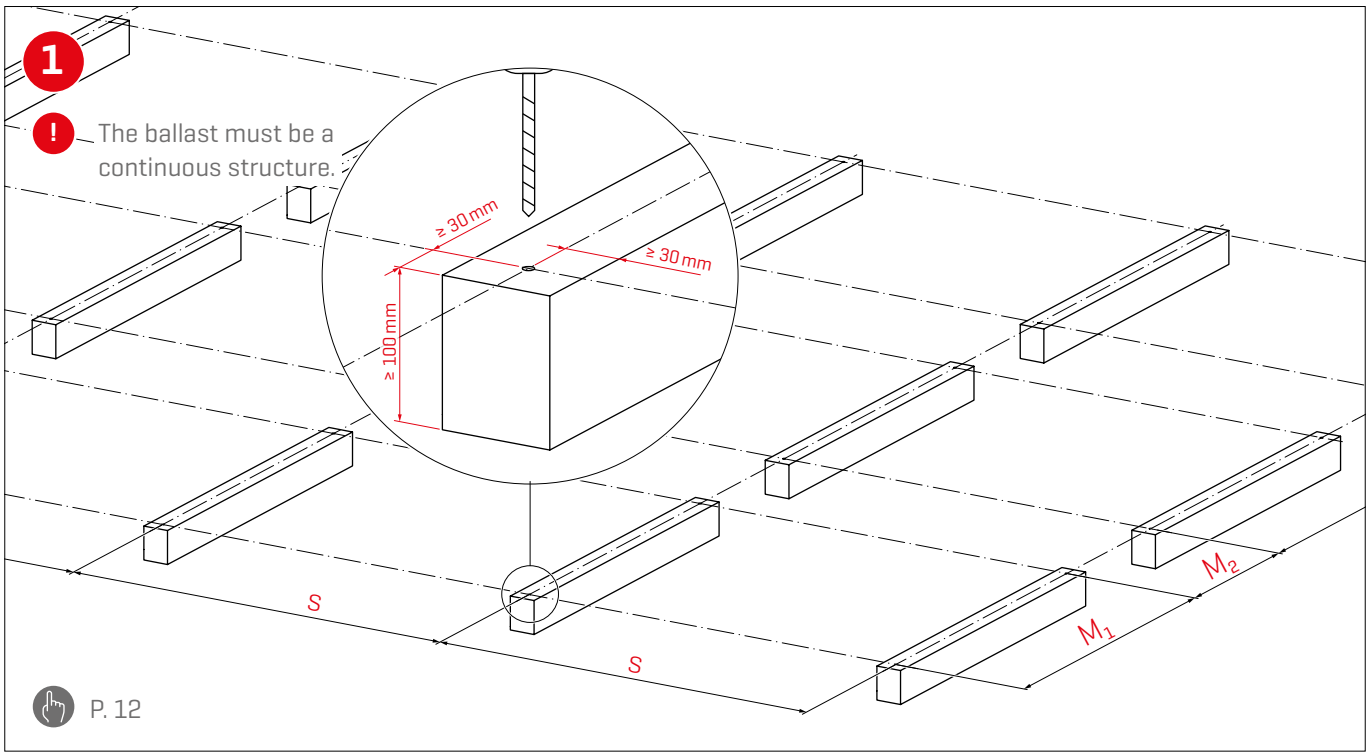

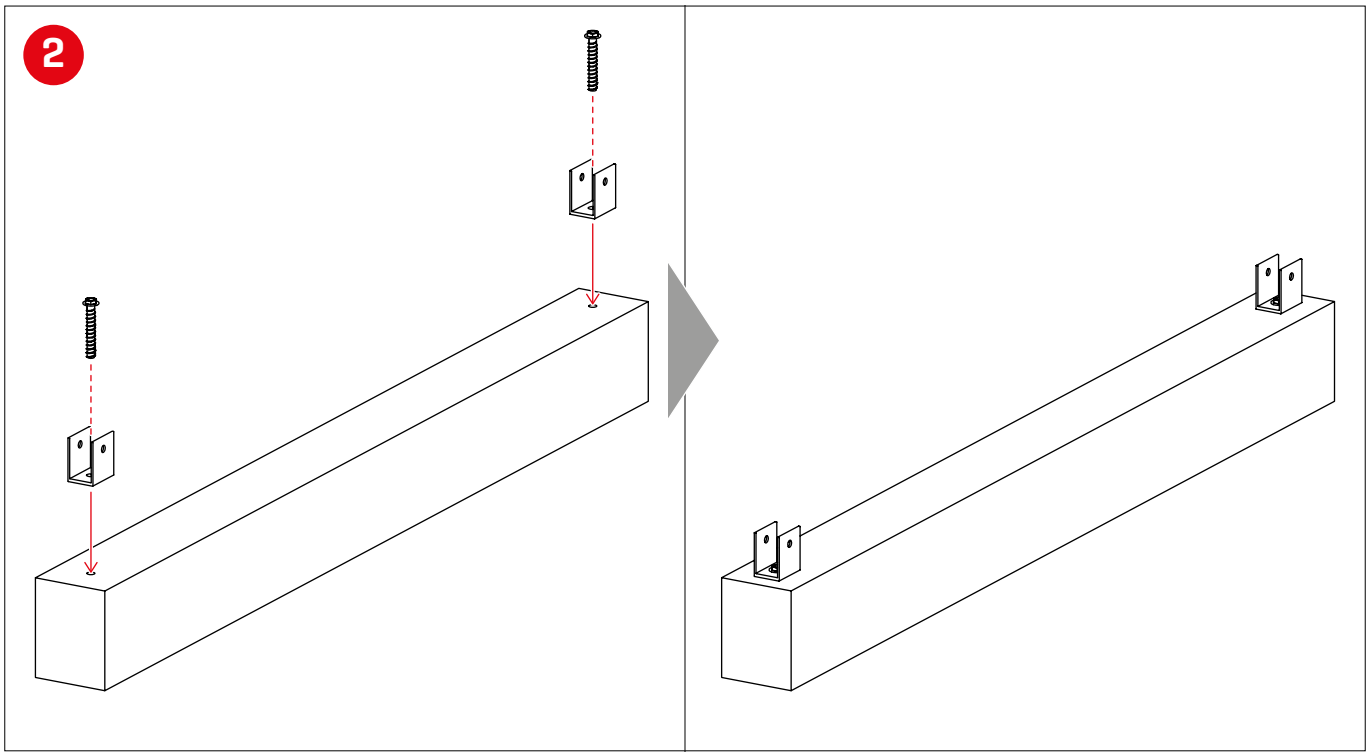

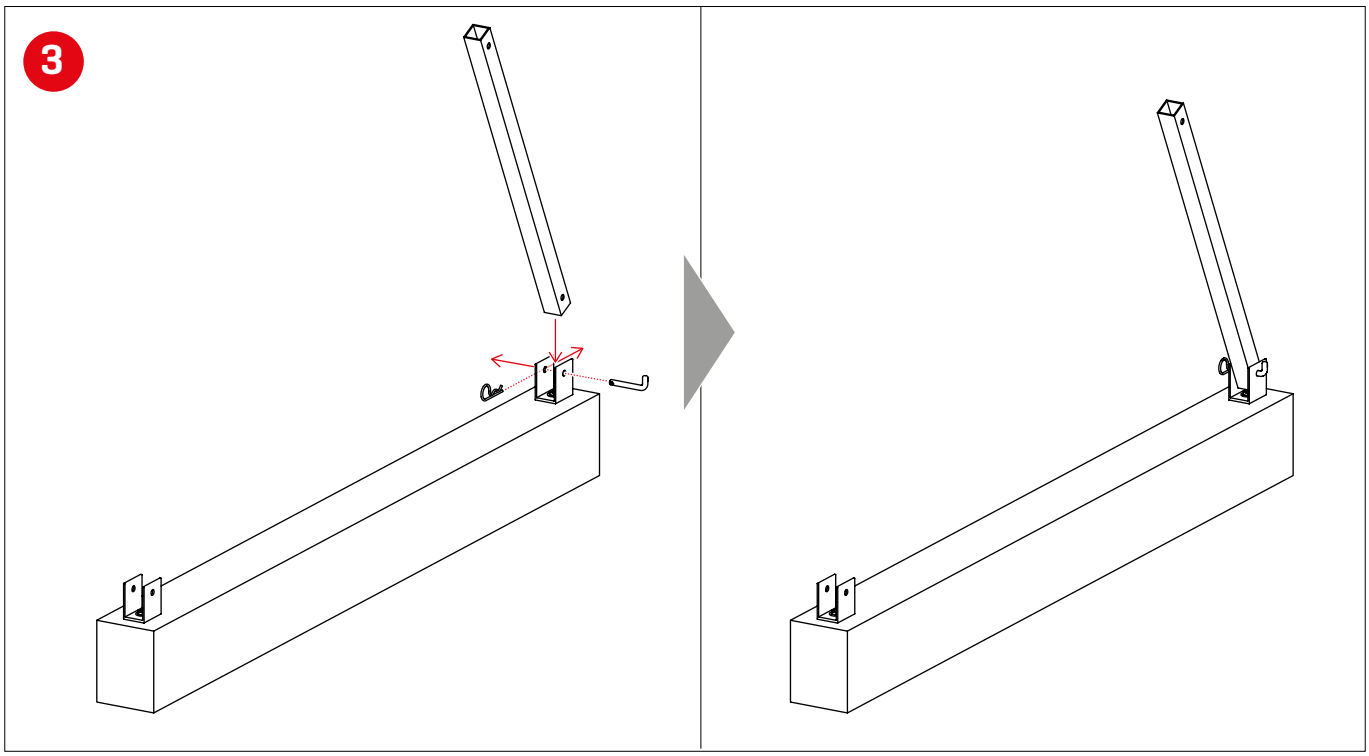
3

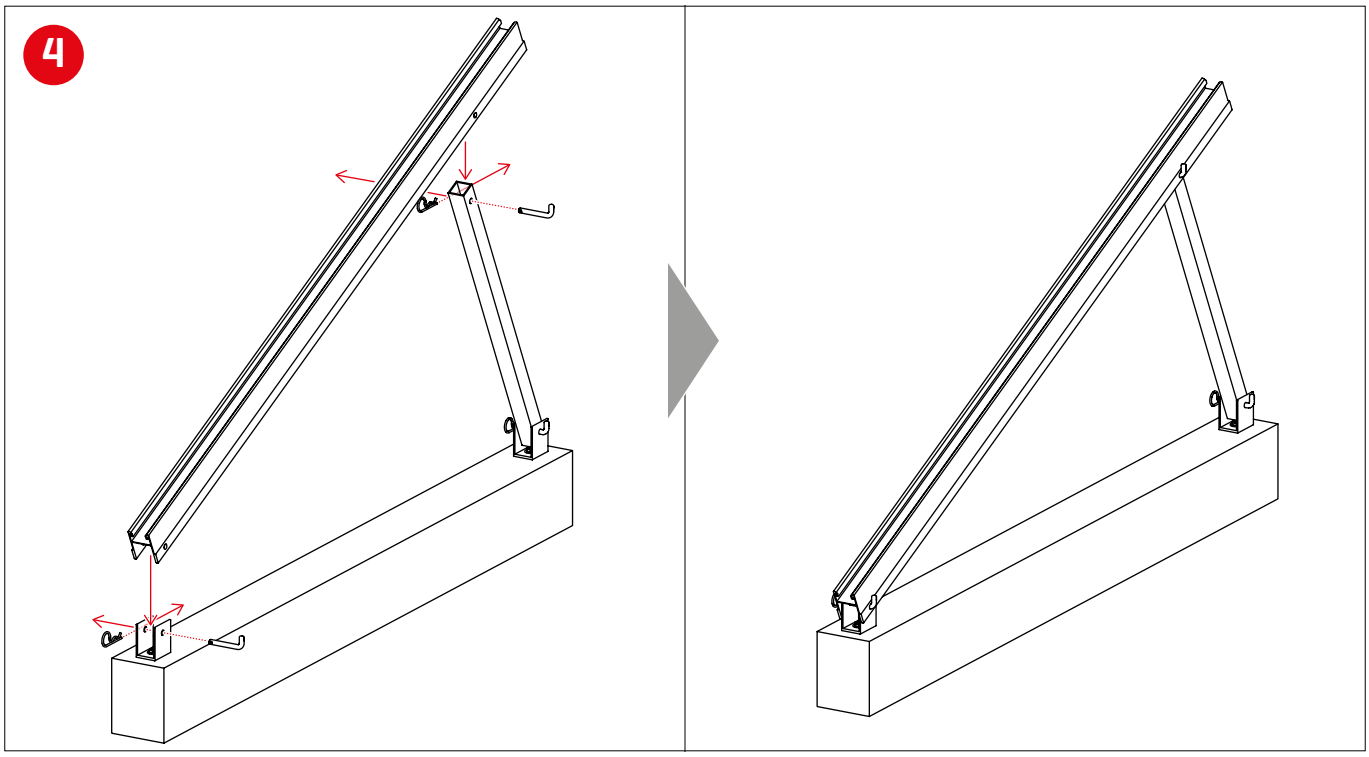
4

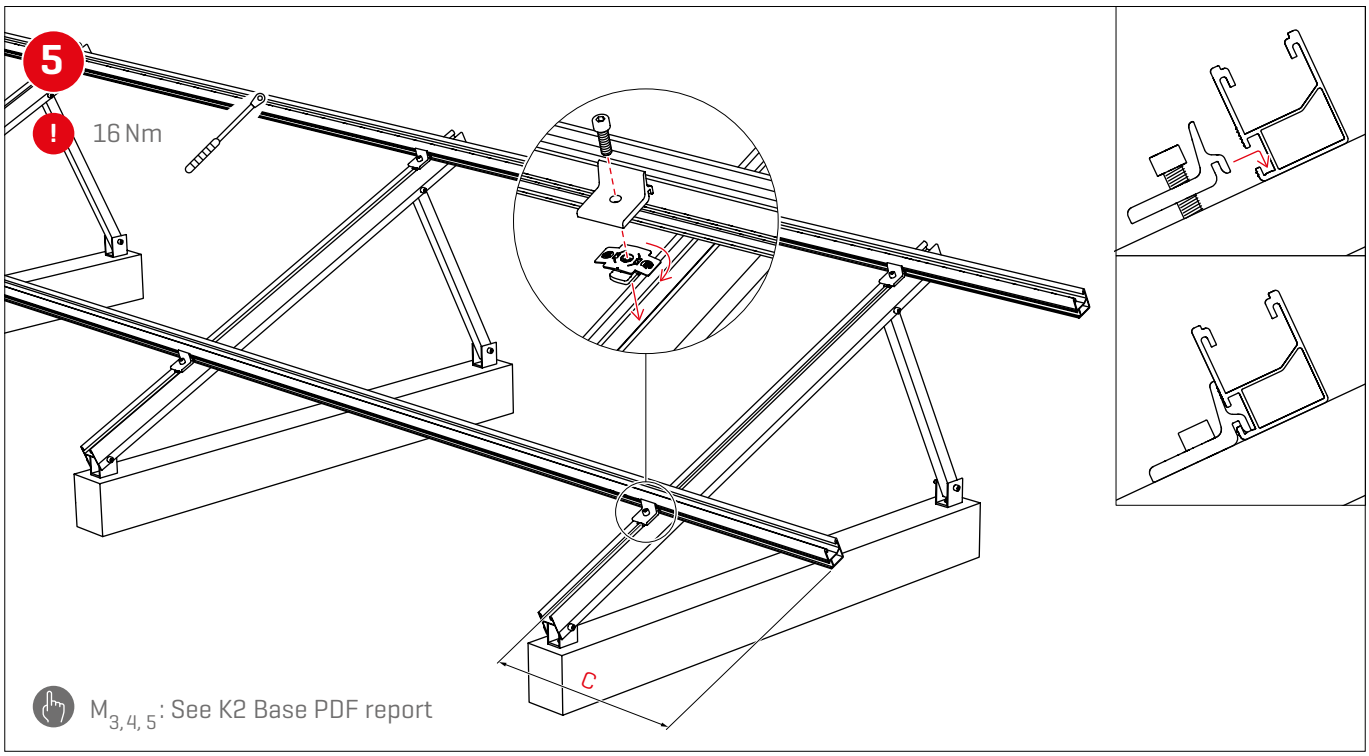
5
16 Nm
C
M3, 4, 5: See K2 Base PDF report

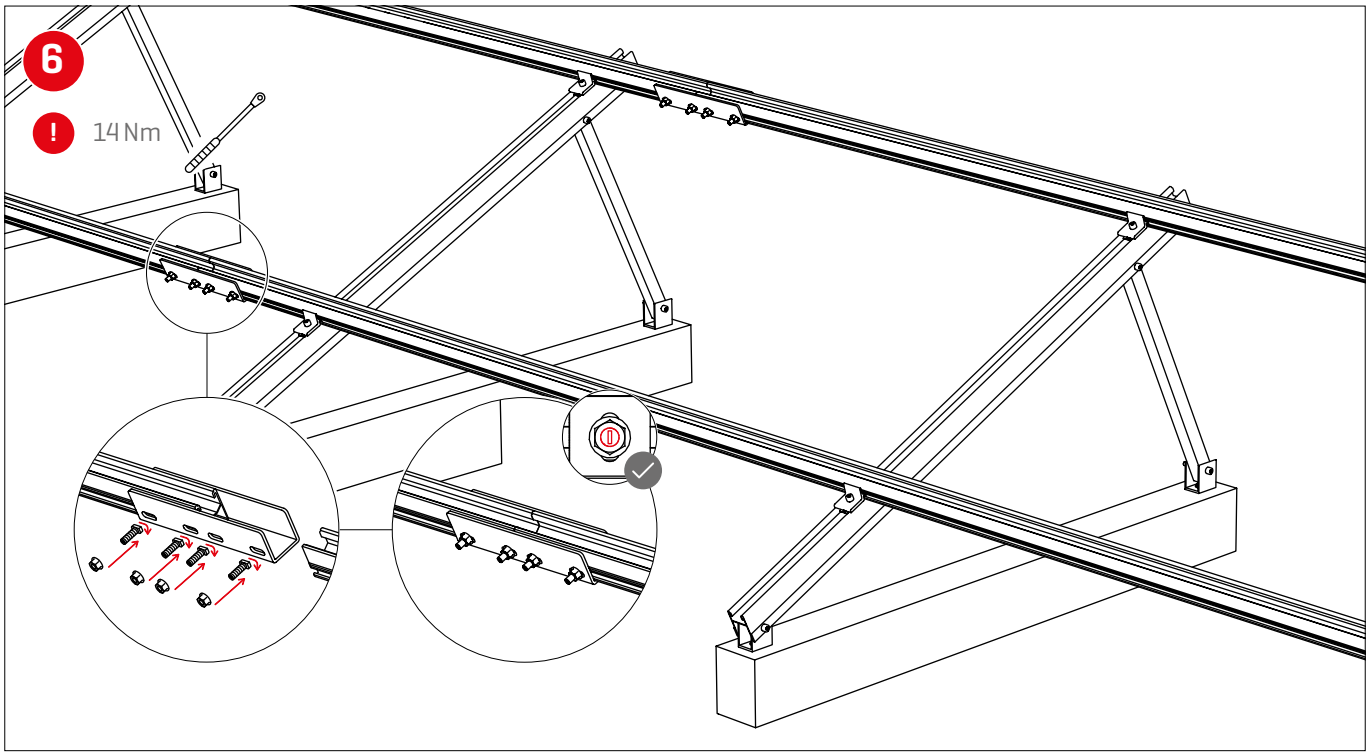
6
14 Nm

Portrait assembly

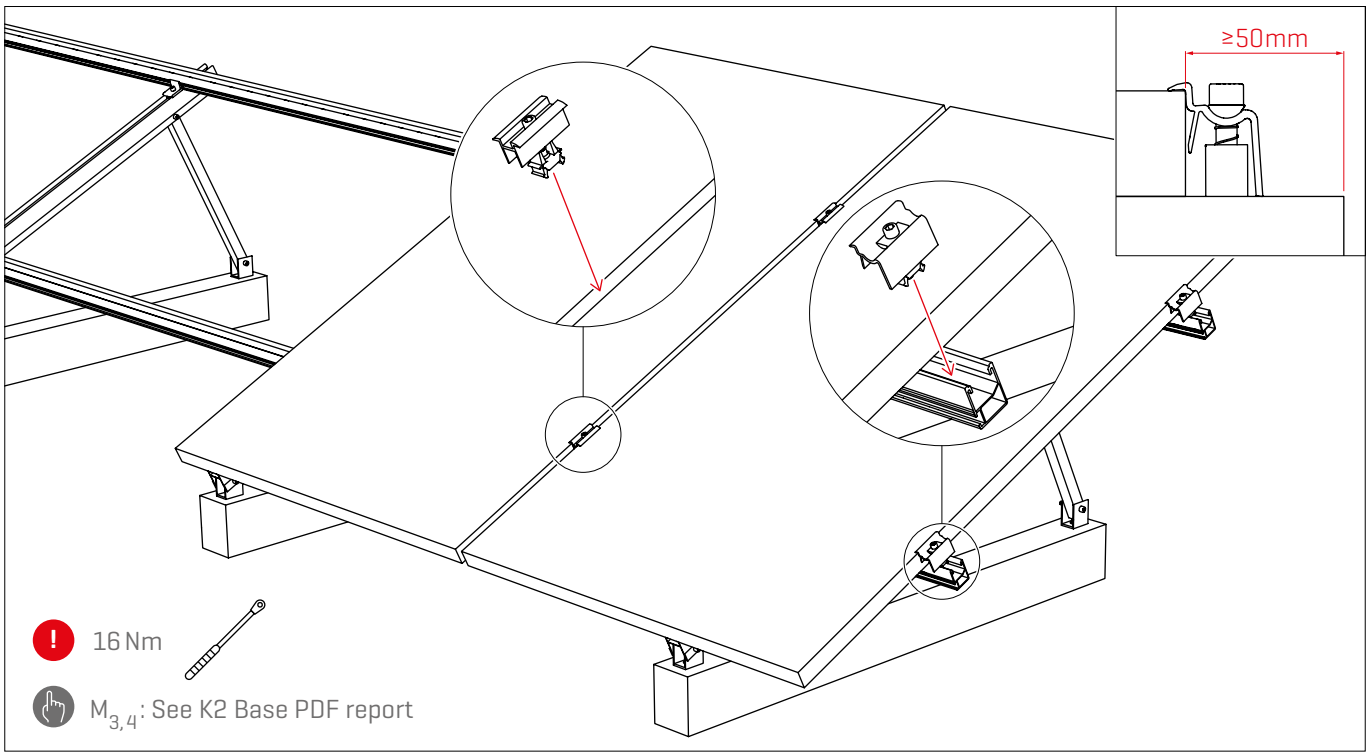

Landscape assembly, single row

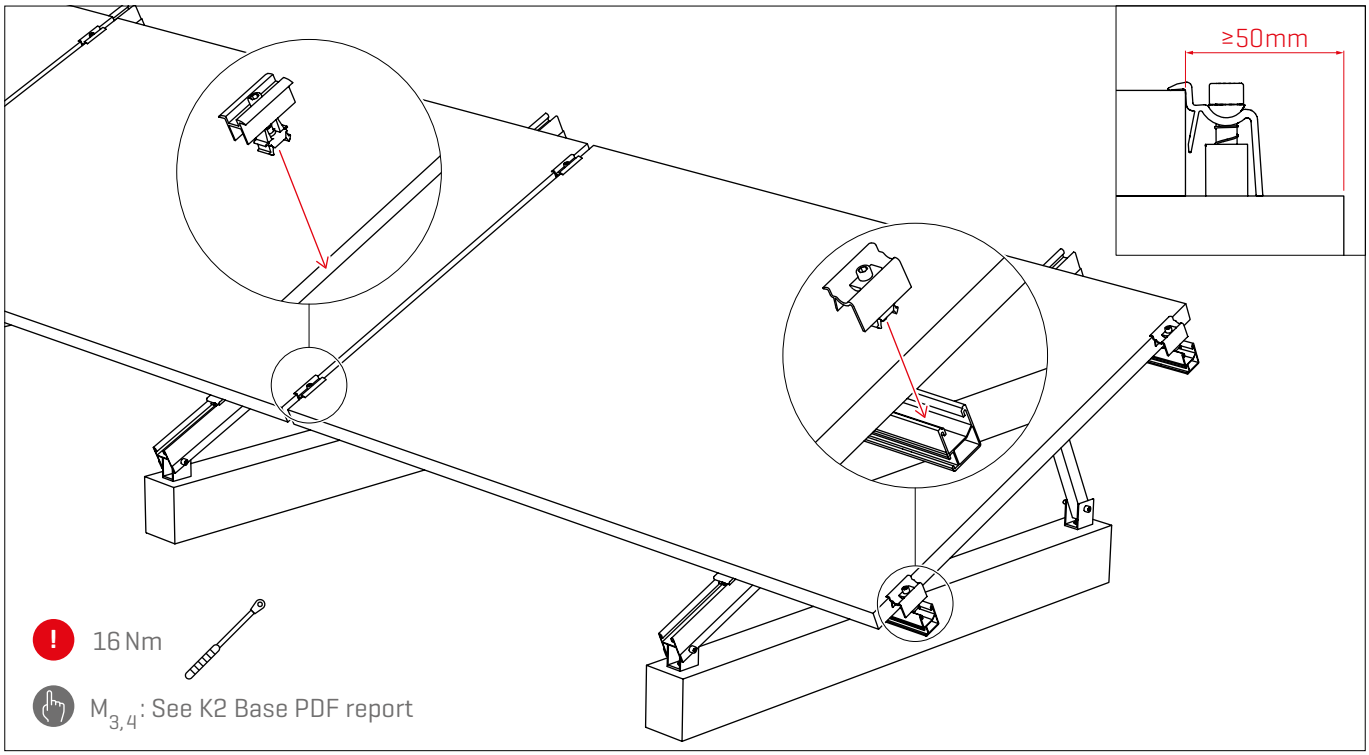

Landscape assembly, double row

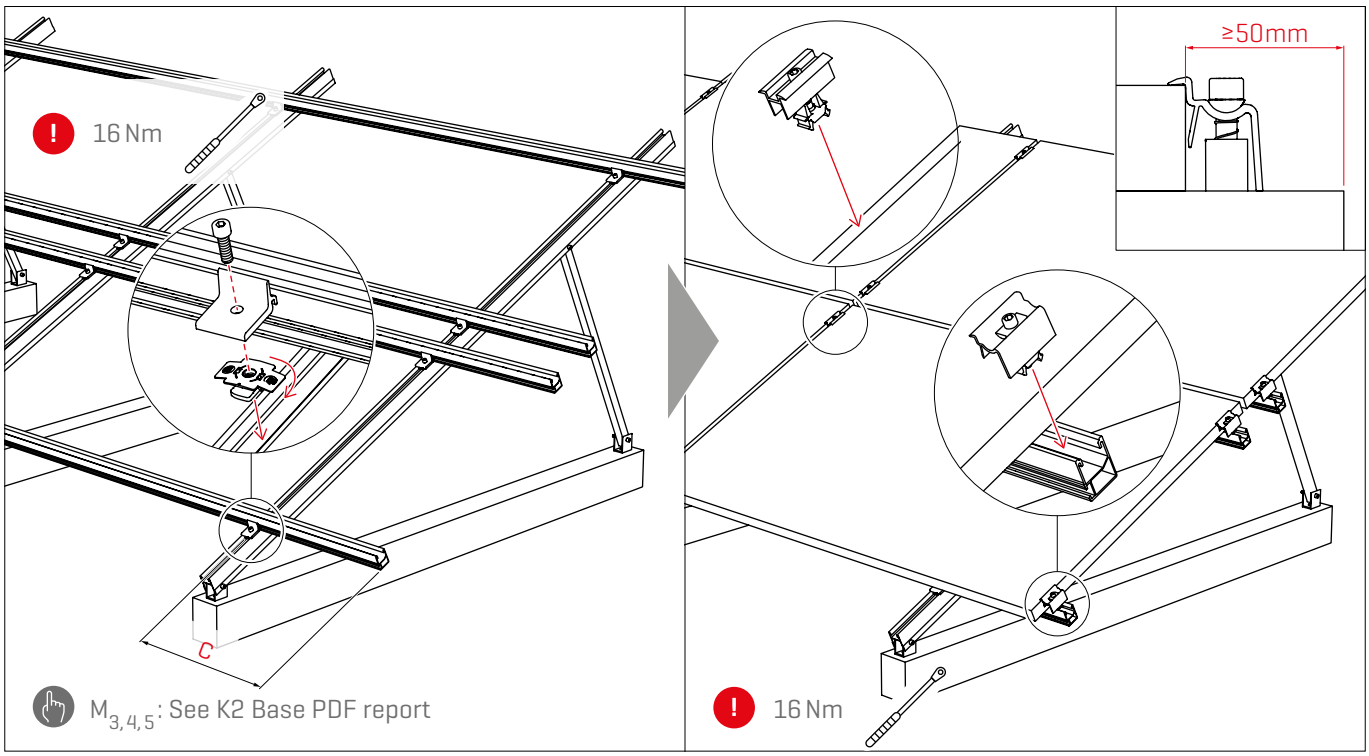

Landscape assembly, single row with AddOn

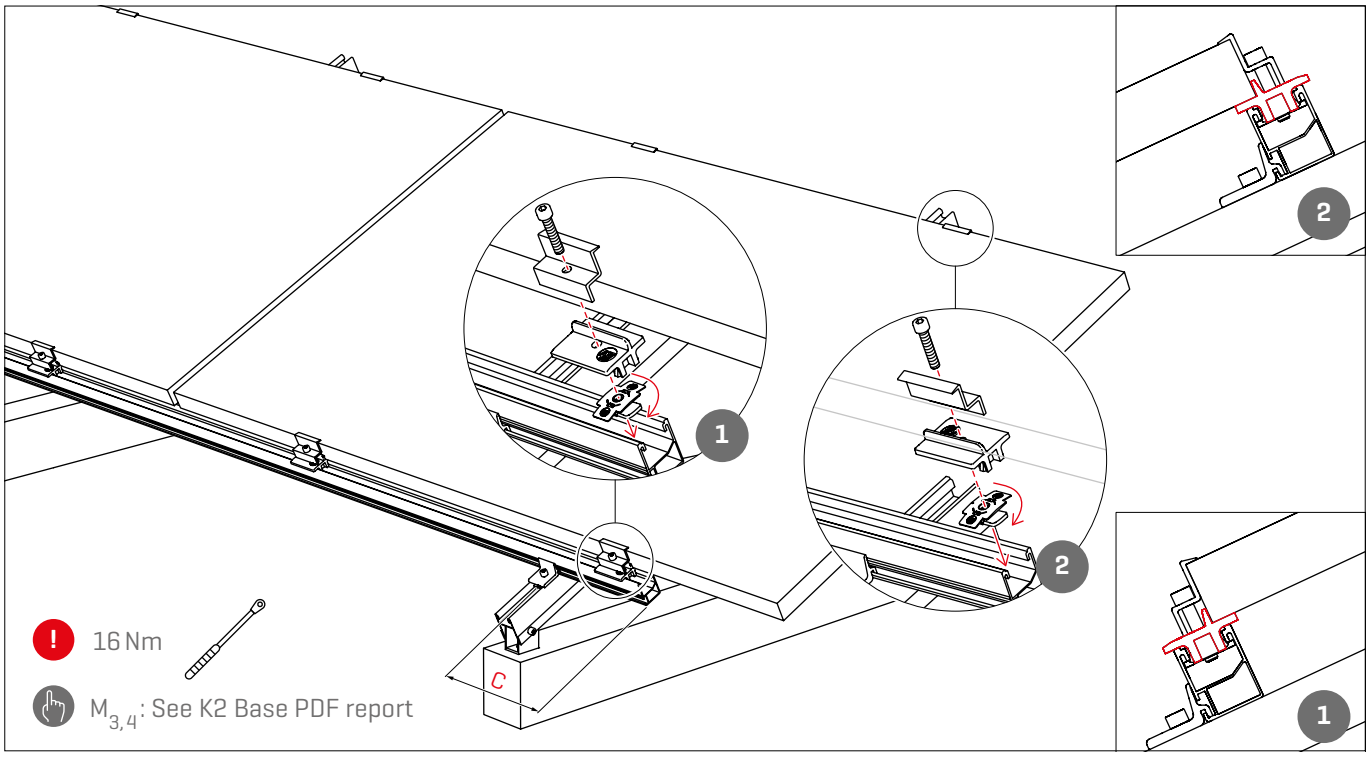

Landscape assembly, double row with AddOn

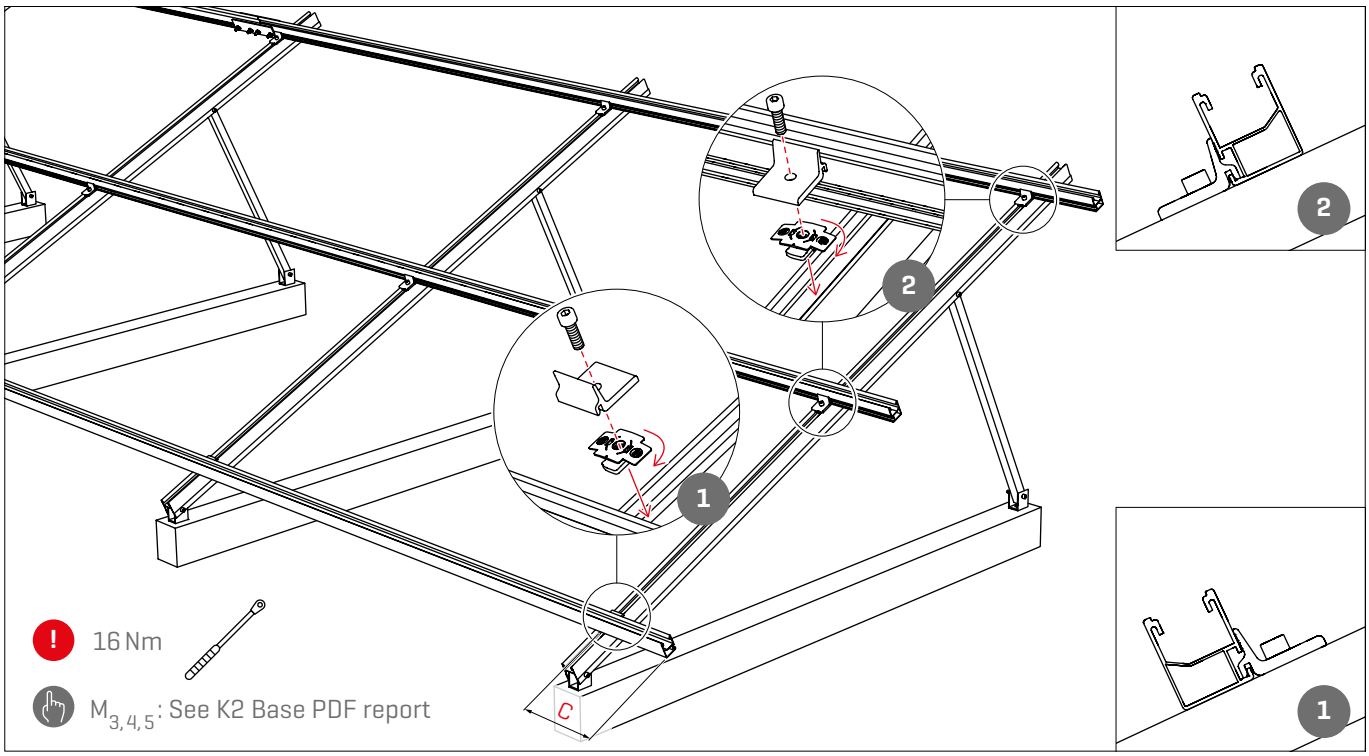

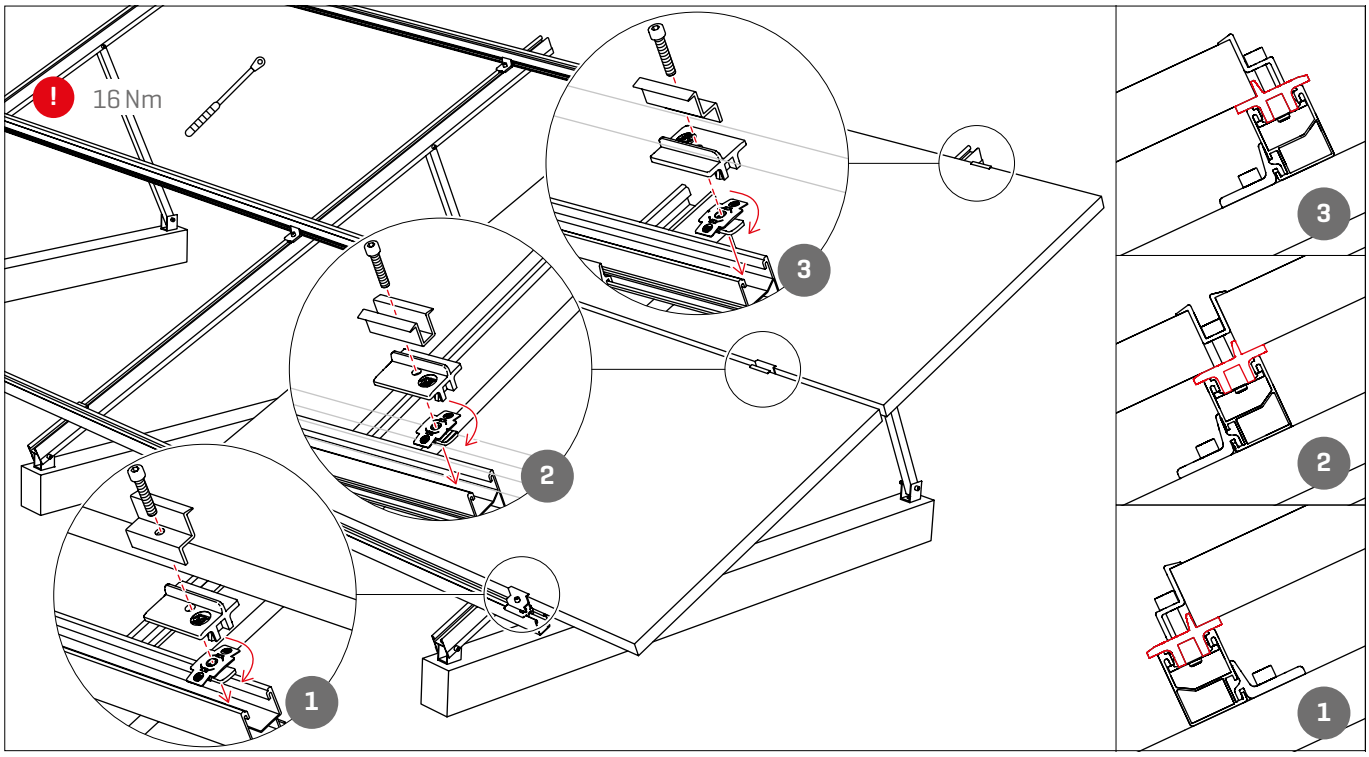

We support PV systems

Thank you for choosing a K2 mounting system.

Systems from K2 Systems are quick and easy to install. We hope these instructions have helped. Please contact us with any questions or suggestions for improvement.
Our contact data:

- **k2-systems.com/en/contact**
- **Service Hotline: +49 (0)7159 42059-0**

Our General Terms of Business apply. Please refer:
k2-systems.com

K2 Systems GmbH

Haldenstraße 1
71272 Renningen
Germany

+49 (0) 7159 - 42059 - 0
info@k2-systems.com
www.k2-systems.com