Connecting Strength

Montageanleitung

MultiRail System

with S-Dome 6.10 elevation

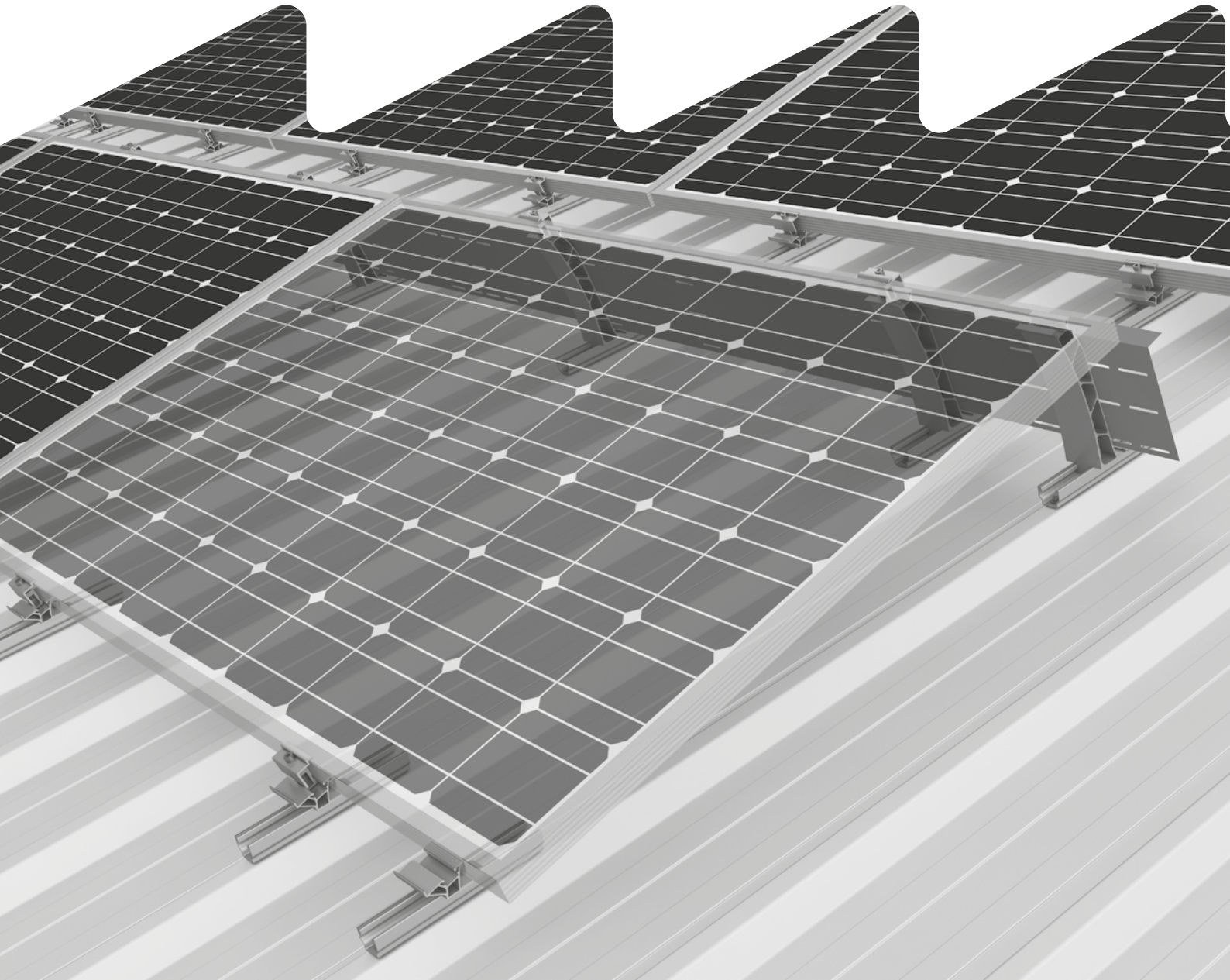

Content

- **Tools overview** 3
- **General safety information** 4
- **The following guidelines apply** 5
  - Roof requirements 5
  - Structural requirements 5
  - Important mounting instructions 5
- **Components** 6
- **Assembly** 8
- **Optional/alternative assembly steps** 12
  - Assembly Windbreaker 12
  - MultiRail CSM on corrugated metal sheet 13
- **Notes** 14

Quality tested - several certifications

K2 Systems stands for secure connections, highest quality and precision. Our customers and business partners have known that for a long time. Independent institutes have tested, confirmed and certified our capabilities and components.

Please find our quality and product certificates under:
k2-systems.com/en/technical-information

Tools overview

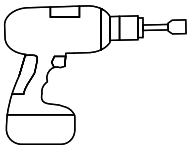



6 mm



8 mm



6 - 35 Nm
(4.5 - 22.2 lb-ft)



6 mm

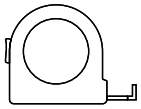

≥ 3.0 m



≥ 6.0 m

Digitale Toolbox



Do you already know our digital services? Use our K2 DocuApp now and record the first important data directly at the customer or project site. Simply import the data into our online planning software K2 Base. Here you can plan your project easily, safely and quickly. You receive a detailed project report with assembly plan and static report. The K2+ interface enables seamless project data transfer to the planning tools of other manufacturers. With the K2 DocuApp, project documentation is done quickly and easily - without annoying paperwork.

Get started now and register:

base.k2-systems.com

docuapp.k2-systems.com

General safety information

Please note that our general mounting instructions must be followed at all times and can be viewed online at k2-systems.com/en/technical-information

- The equipment may only be installed and operated by qualified and adequately trained installers.
- Prior to installation, ensure that the product complies with on-site static loading requirements.
  For roof-mounted systems, the roof load-bearing capacity must always be checked.
- National and local building regulations and environmental requirements must be adhered to.
- Compliance with health and safety regulations, accident prevention guidelines and applicable standards is required.
  - Protective equipment such as safety helmet, boots and gloves must be worn.
  - Roofing works must be in accordance with roofing regulations utilising fall protection safeguards when eaves height exceeds 3 m.
  - At least two people must be present for the duration of the installation work in order to provide rapid assistance in the event of an emergency.
- K2 mounting systems are continuously developed and improved and the installation process may thereby change at any time. Prior to installation consult our website at www.k2-systems.com/en/technical-information for up-to-date instructions.
  We can send you the latest version on request.
- The assembly instructions of the module manufacturer must be adhered to.
- Equipotential bonding/grounding/earthing between individual parts is to be performed according to country specific standards, as well as national laws and regulations.
- At least one copy of the assembly instructions should be available on site throughout the duration of the installation.
- Failure to adhere to our general safety and assembly instructions and not using all system components, K2 is not liable for any resulting defects or damages. We do not accept liability for any damage resulting in the use of competitor's parts. Warranty is excluded in such cases.
- German law shall apply excluding the UN Convention on CISG. Place of venue is Stuttgart. Our General Terms of Business apply.
- If all safety instructions are adhered to and the system is correctly installed, there is a product warranty entitlement of 12 years! We strongly recommend reviewing our terms of guarantee, which can be viewed at www.k2-systems.com/en/technical-information We will also send this information on request.
- Dismantling of the system is performed in reverse order to the assembly.
- K2 stainless steel components are available in different corrosion resistance classes. Each structure or component must be carefully checked for possible corrosion exposure.

The following guidelines apply

This system can be installed as standard under the following conditions. Even if the system is capable of meeting higher demands through the integration of safety standards, please get in touch with your contact at K2 Systems if the specified values are exceeded.

Roof requirements

- The sufficient holding force of the roof covering at the support or substructure must be ensured on site.
- Roof pitch: 0 - 10°
- Thickness trapezoidal sheet metal: ≥ 0.4 mm steel or ≥ 0.5 mm aluminium
- Sheet quality steel at least S235GD acc. DIN EN 10025-1
- Minimum tensile strength for aluminium 165 N/mm²
- High crest width ≥ 22 mm, flush area surrounding the bore hole: Ø ≥ 20 mm
- High crest radius for corrugated sheet metal: r = 22 - 45 mm

Structural requirements

- For framed modules with a frame height of 30 - 50 mm
- Permissible module dimensions: length 1562 - 2390 mm, width 950 - 1170 mm

Important mounting instructions

- On-site general standards and regulations for lightning protection must be observed and consultation with a specialist to create a lightning protection concept is recommended (use lightning protection clamp if necessary). Country-specific regulations must be observed.
- If the trapezoidal sheet is fastened with calottes, please do not fasten the MultiRails on the them! Spacing must be measured beforehand.
- Fasten the MultiRails to corrugated or trapezoidal sheet metal with thin sheet metal screws approved by the building authorities.
- Possible row spacing with Windbreaker option
  - S-Dome 6.10: 1078 - 2000 mm
  - S-Dome 6.15: 1500 - 2300 mm
- A minimum distance to the roof edge of 600 mm must be maintained. For building heights below 5 m, the minimum distance can be reduced.

Components

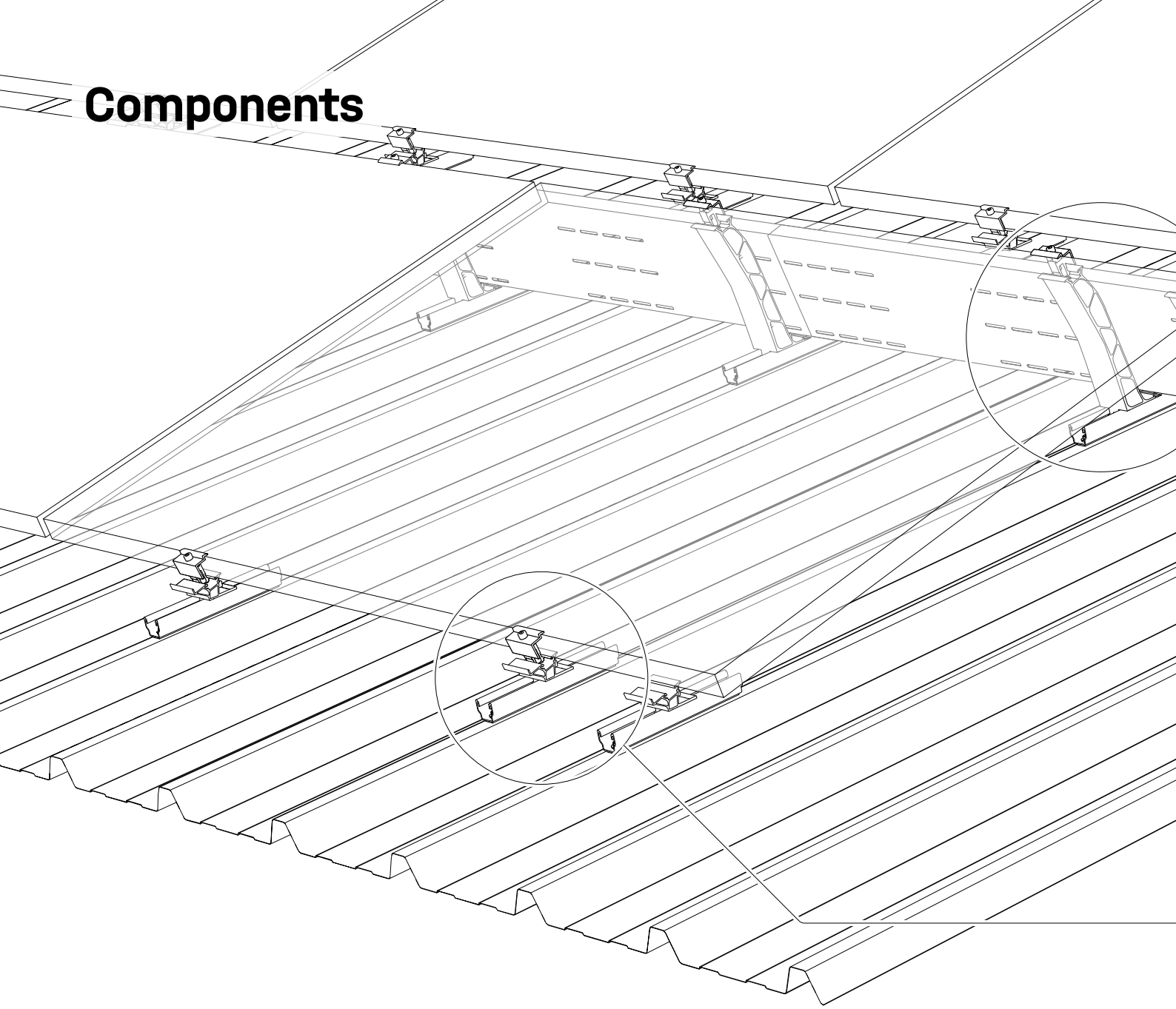

1 2002793

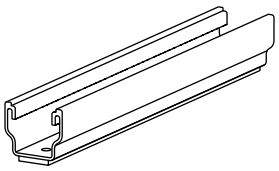

MultiRail 25

Alternative for corrugated sheet metal:
2004210

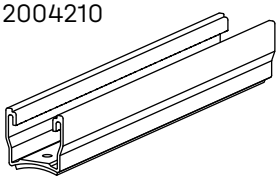

MultiRail 25 CSM

2 2004125

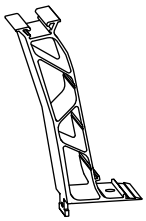

Dome 6.10 Peak

3 1005207



Self-tapping screw with sealing washer

4 1001643 + 2001729

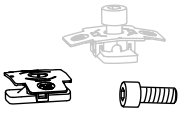

MK2 Slot nut with clip + Allen bolt M8×20

5 2003243

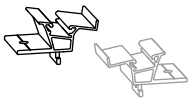

Dome 6.10 SD

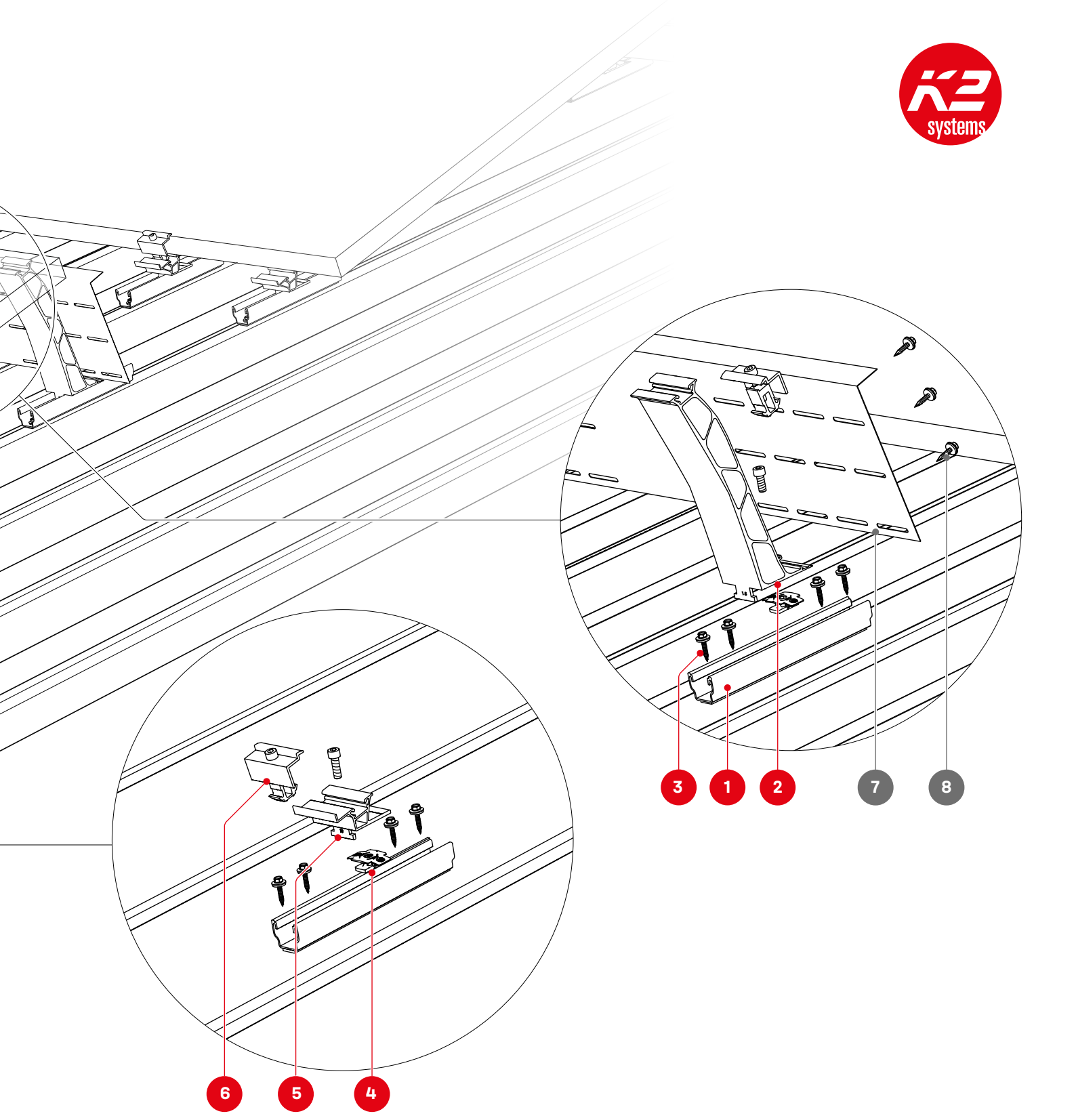

Optional

6 2002559 / 2002610



DomeClamp EC silver/black

7 2004167

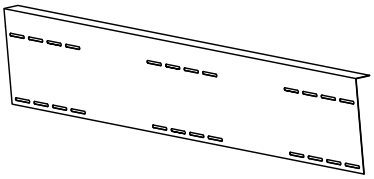

Windbreaker LS 6.10

8 2002937 / 2003427



Self-tapping screw with sealing washer

Assembly

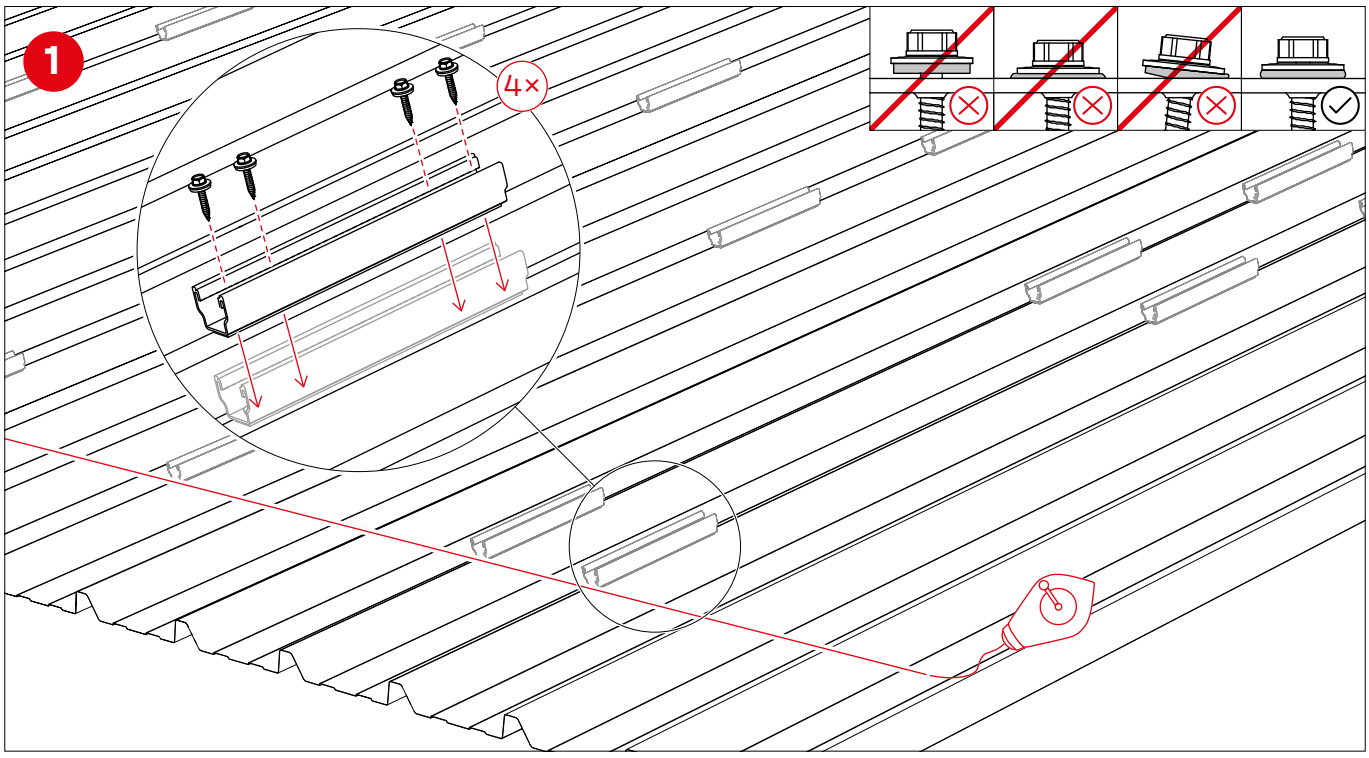
1
4×

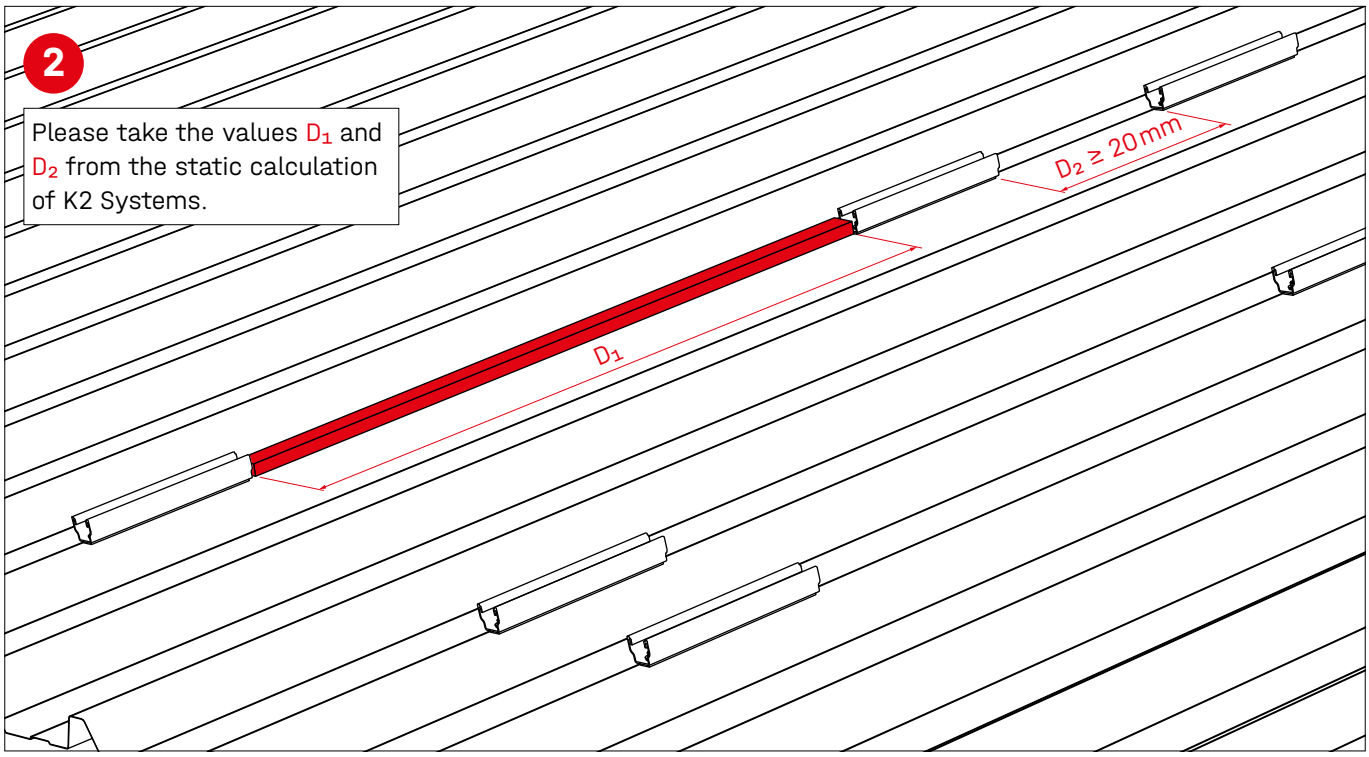
2
Please take the values D1 and D2 from the static calculation of K2 Systems.
D2 ≥ 20 mm
D1

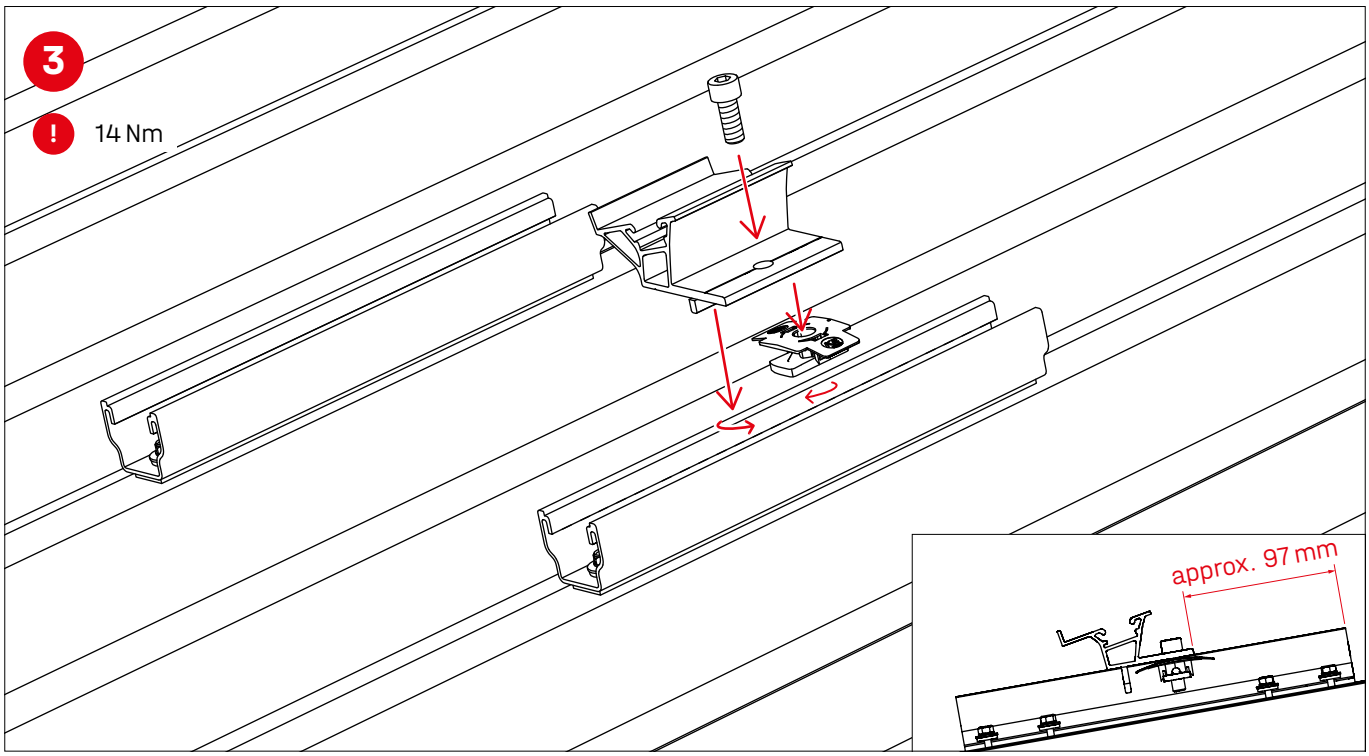
3
!
14 Nm
approx. 97 mm

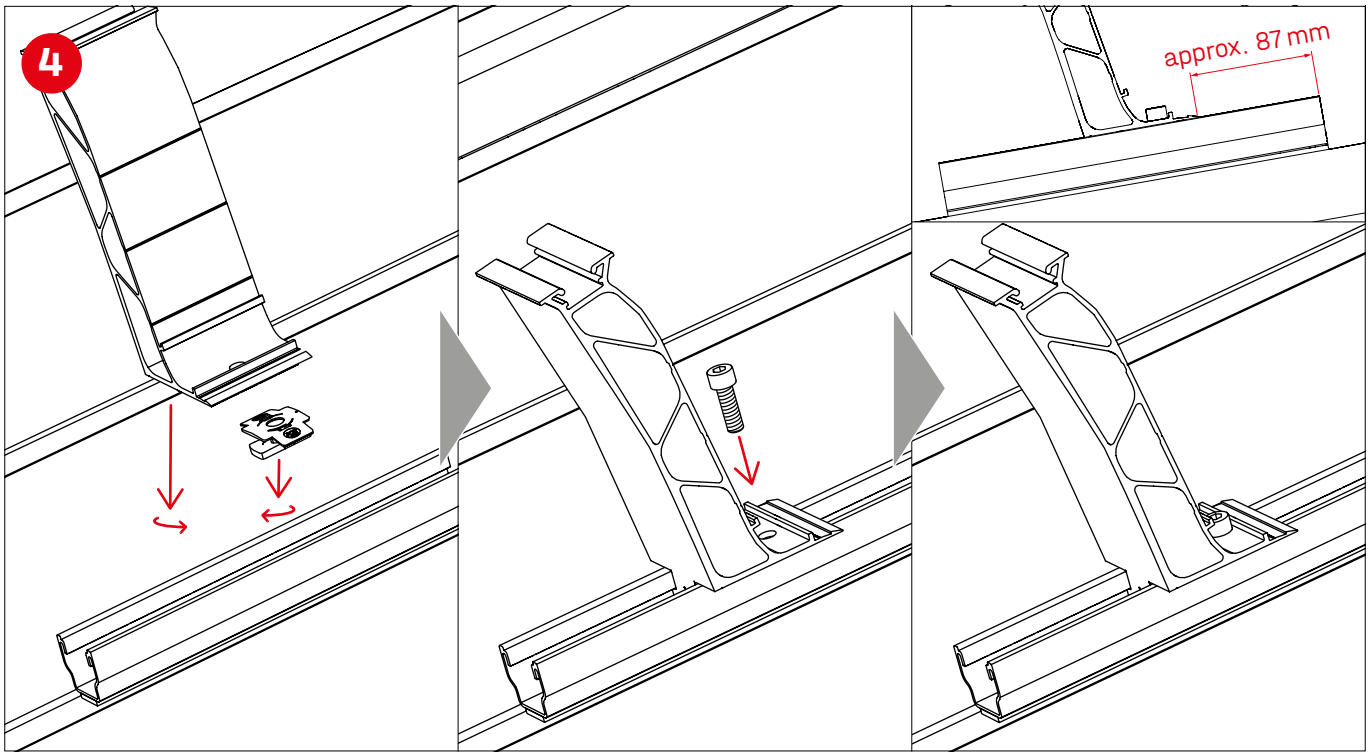
4
approx. 87 mm

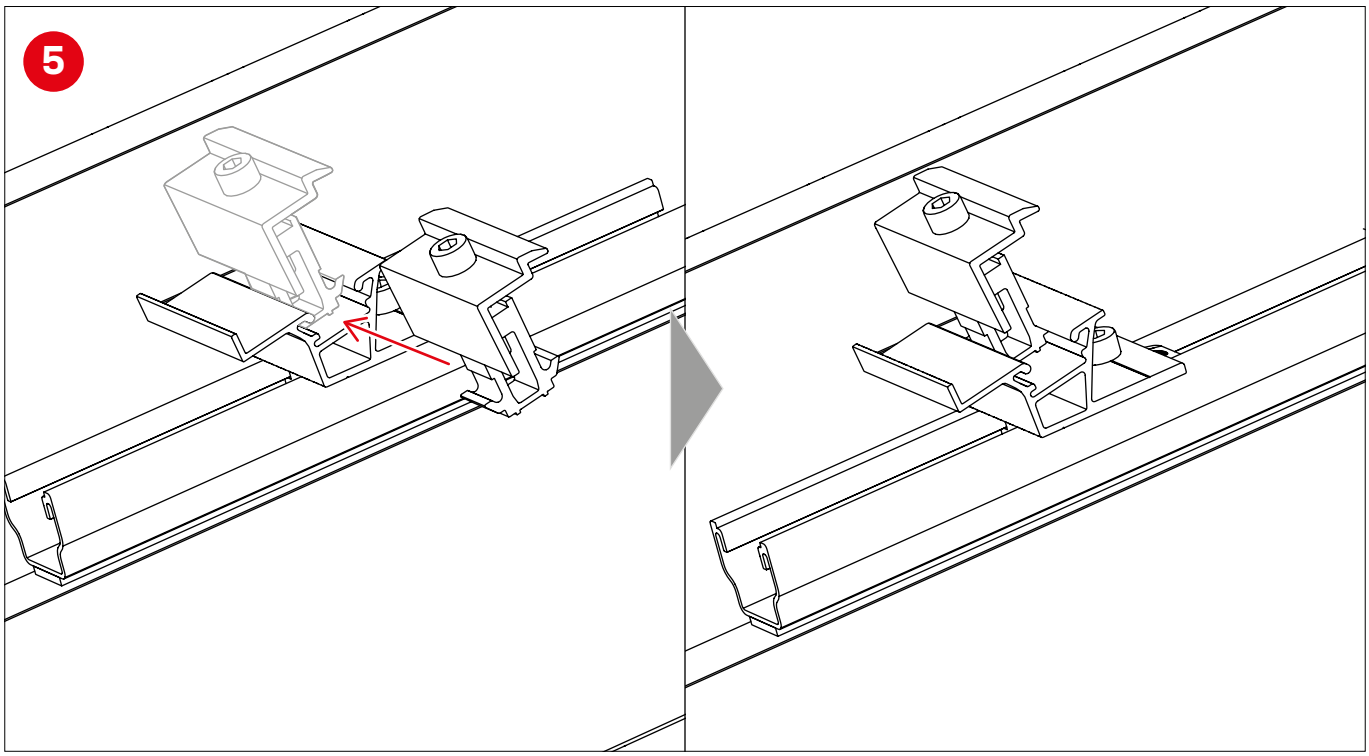
5

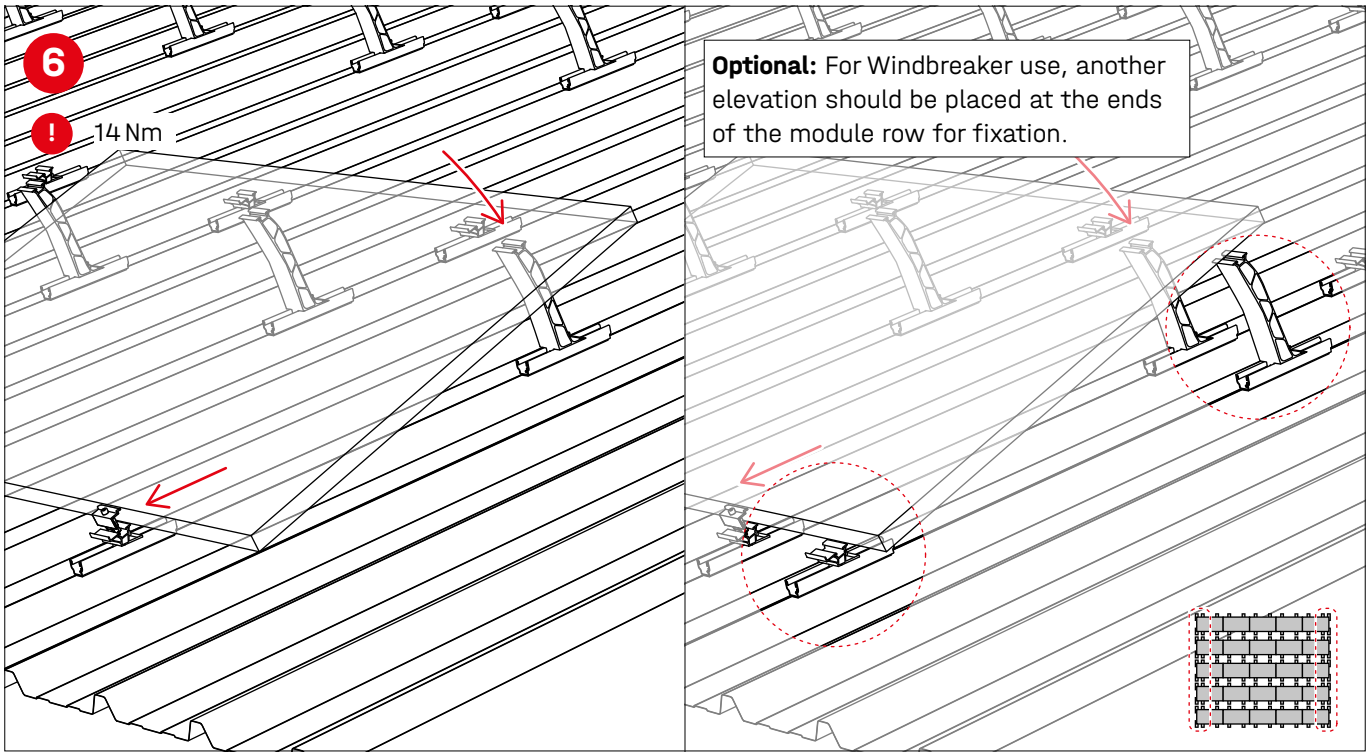
6
!
14 Nm
Optional: For Windbreaker use, another elevation should be placed at the ends of the module row for fixation.

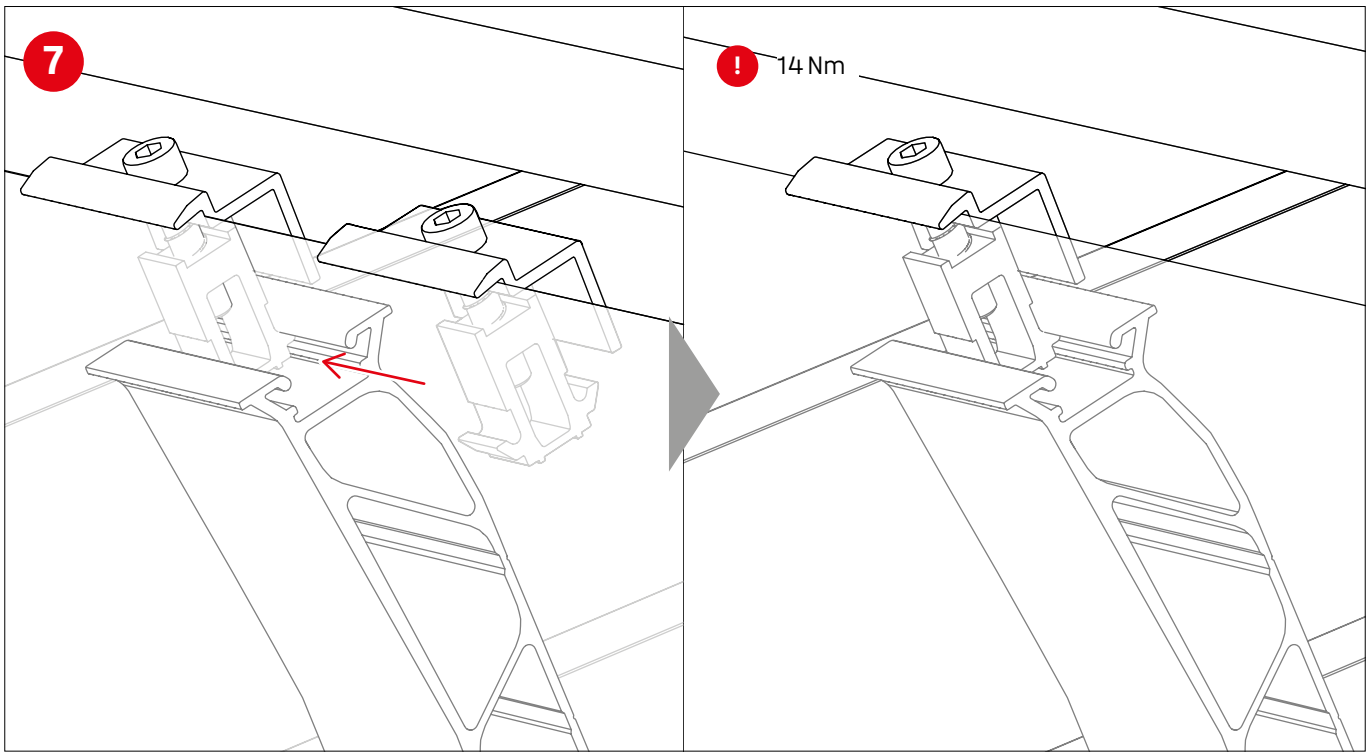
7
!
14 Nm

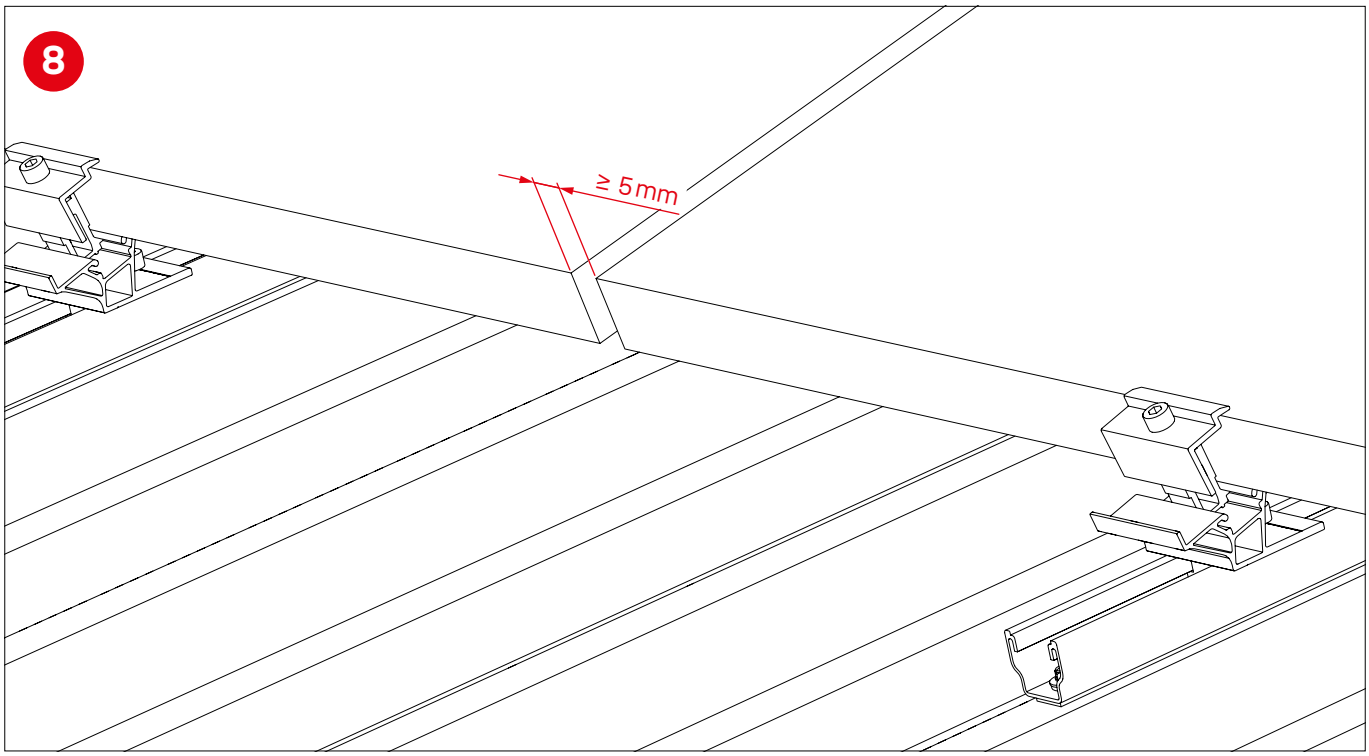
8
≥ 5 mm

Optional/alternative assembly steps

Assembly Windbreaker

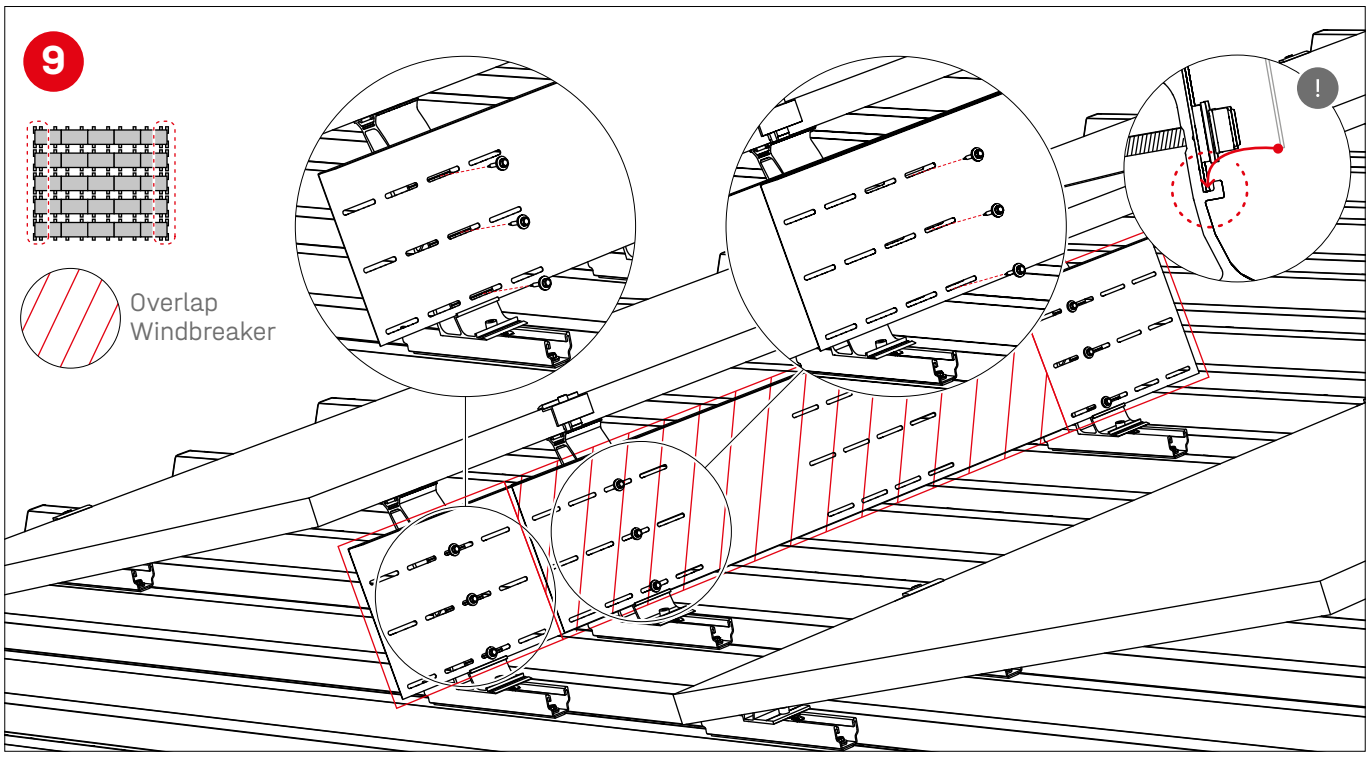

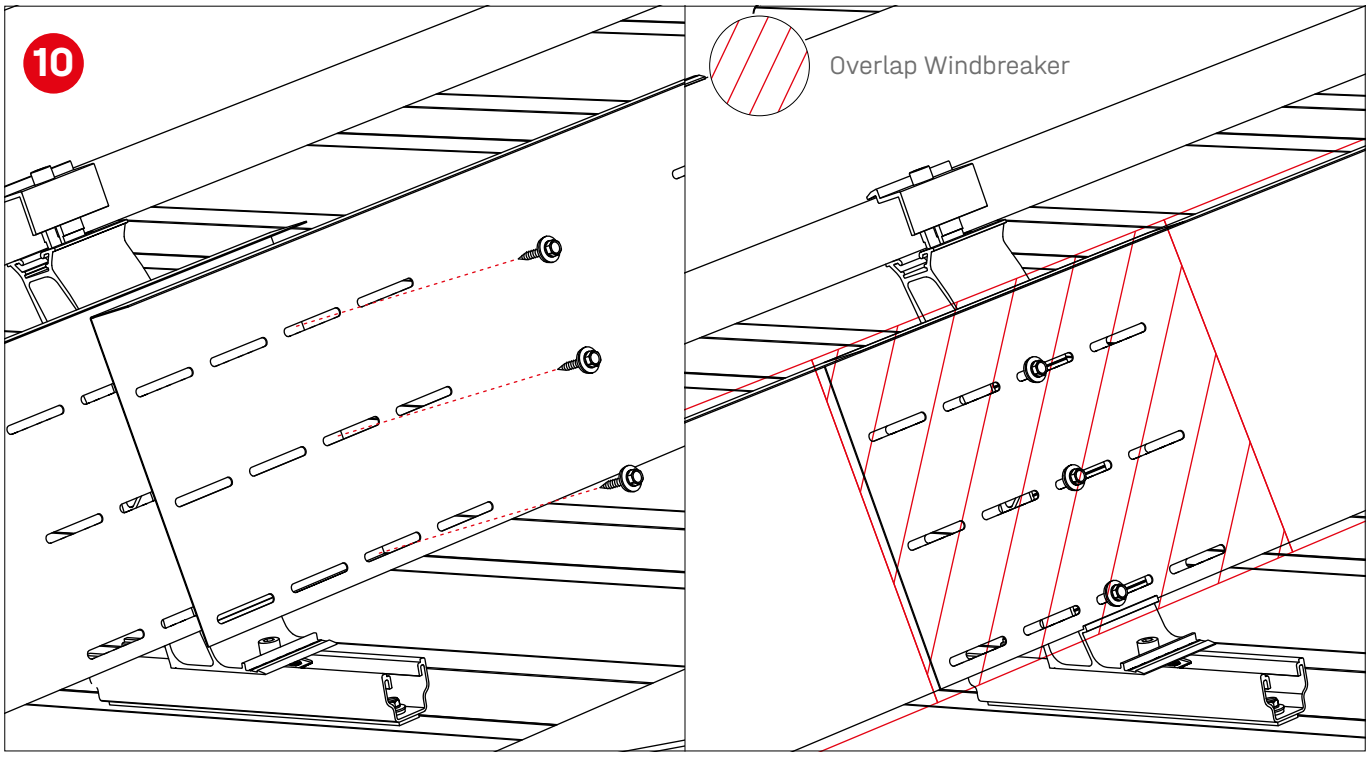

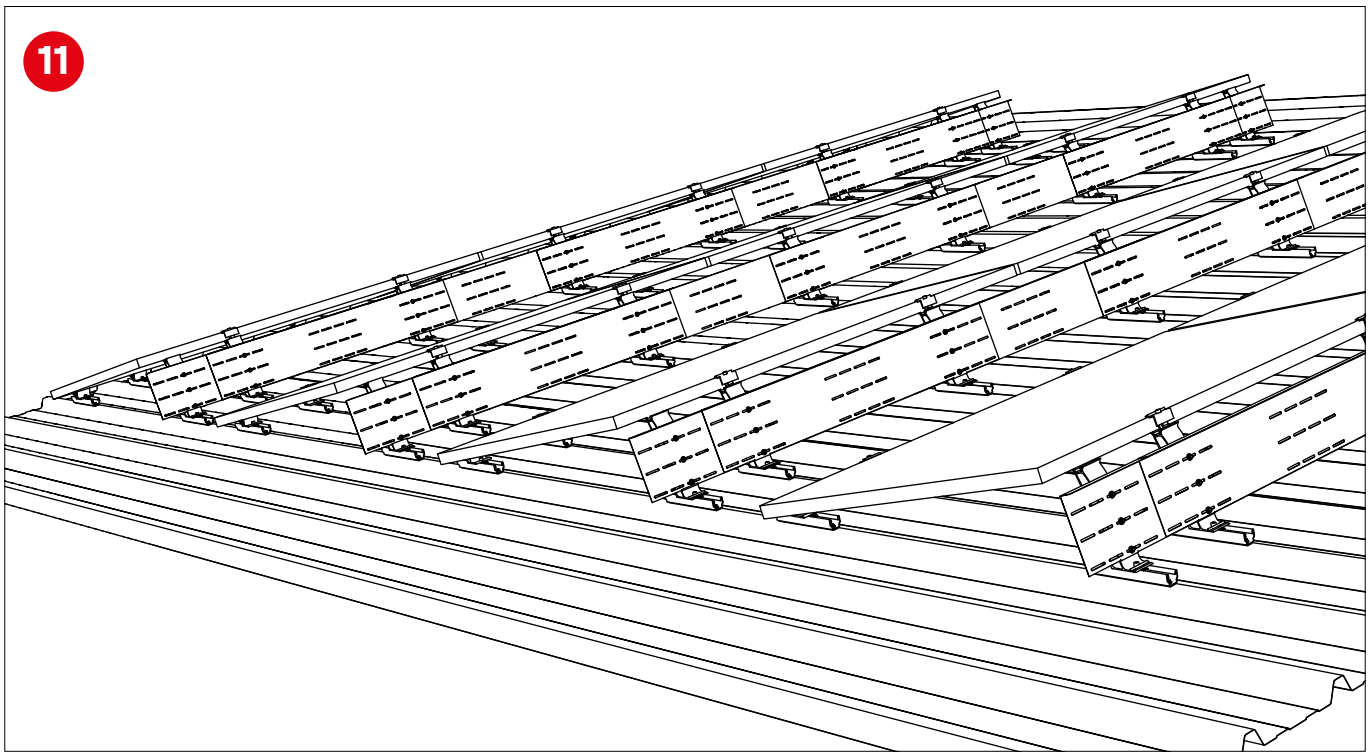

MultiRail CSM on corrugated metal sheet

! Only possible with the MultiRail CSM!

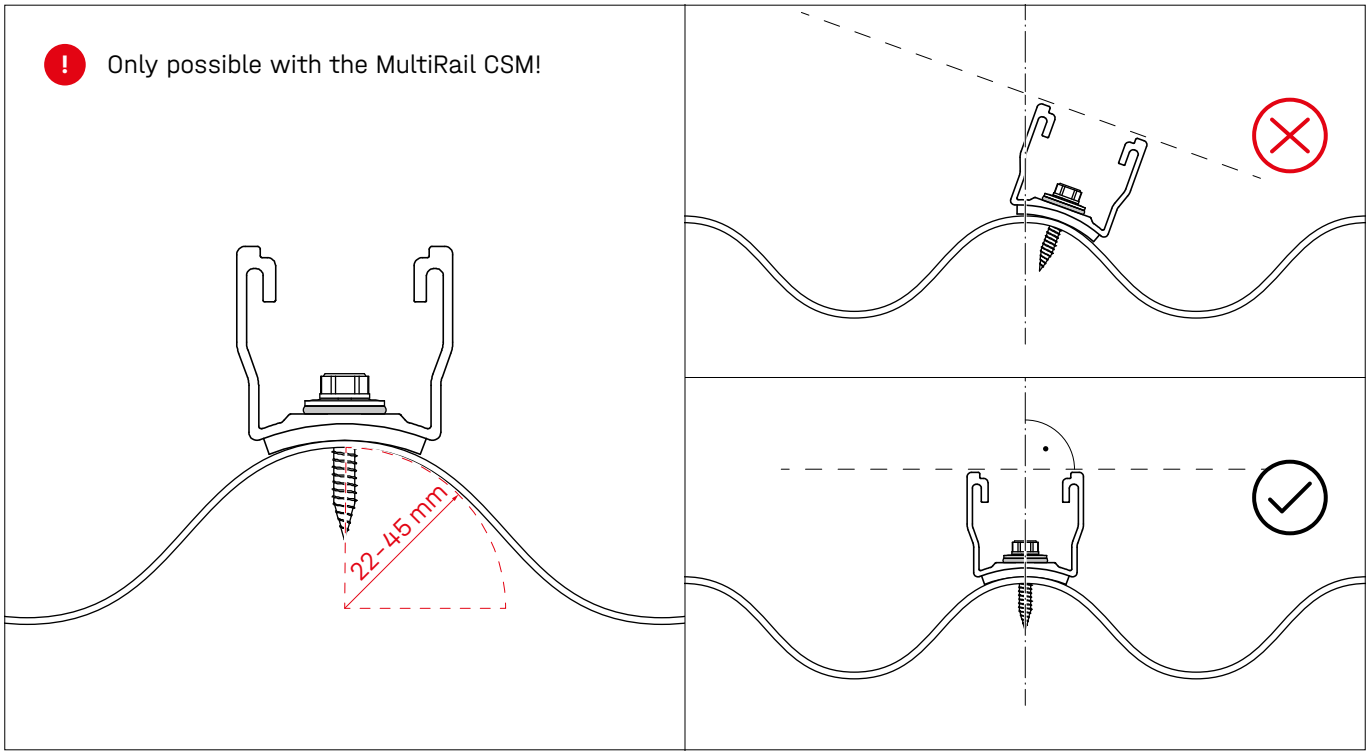

Notes

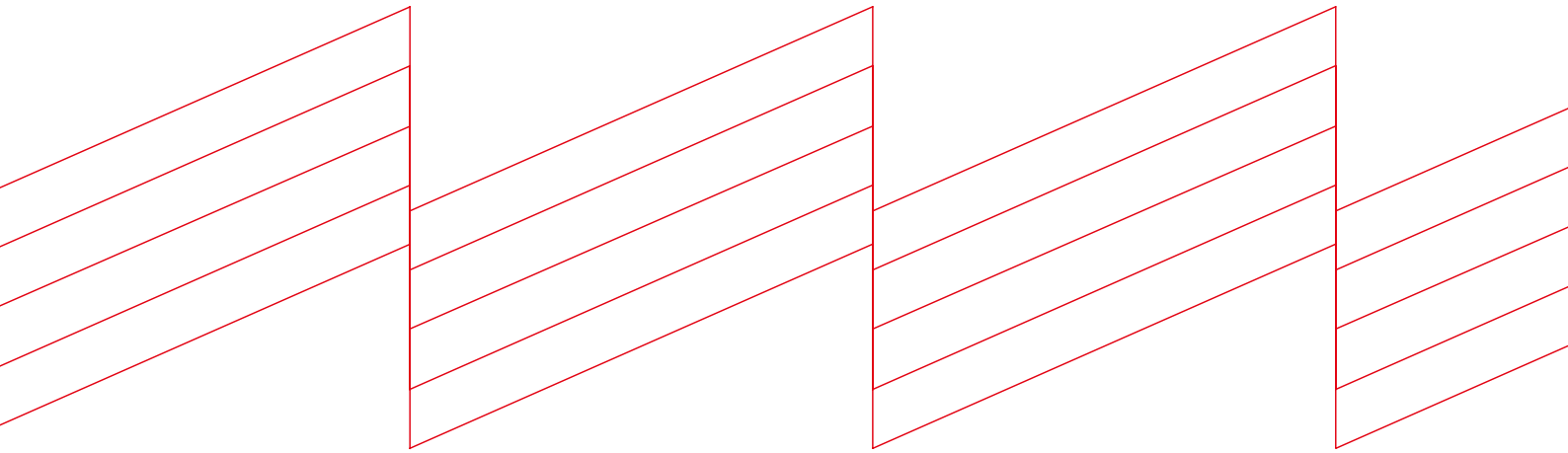

K2 Systems GmbH
Industriestraße 18 · 71272 Renningen · Germany
+49 (0) 7159 - 42059 - 0 · info@k2-systems.com · k2-systems.com

MultiRail incl. S-Dome 6 Assembly EN V3 | 0324 · Subject to change
Product illustrations are exemplary and may differ from the original.

Connecting Strength **k2-systems.com**