

Assembly Manual

BasicRail System

with D-Dome 6.10 elevation

Connecting Strength

k2-systems.com

Content

- **Tools overview** 3
- **General safety information** 4
- **The following guidelines apply** 5
  - Planning with K2 Base 5
  - Roof requirements 5
  - Static requirements 5
  - Important installation instructions 5
- **Components** 6
- **Assembly** 8
  - Module fixation and distances mounting rails 8
  - Installation BasicRail base rails 9
  - Assembly D-Dome 6 elevation 14
- **Notes** 17

Quality tested - several certifications

K2 Systems stands for secure connections, highest quality and precision. Our customers and business partners have known that for a long time. Independent institutes have tested, confirmed and certified our capabilities and components.

Please find our quality and product certificates under:
k2-systems.com

Übereinstimmungszeichen (Ü-Zeichen)



The BasicRail system BasicRail/BasicClip has the German general building authority technical approval Z-14.4-603.

Tools overview

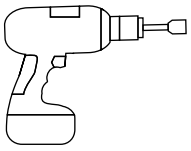



5 + 6 mm 8 mm 25

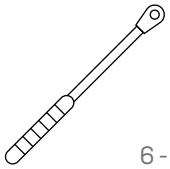



6 - Nm
(4.5 - 22.2 lb-ft)

6 mm

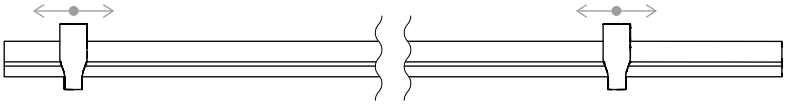

Dome Speed Spacer 2.25 / 2.50 · 2003253 / 2004129
Distance template for module lengths

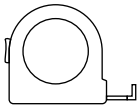

≥ 3.0 m



≥ 6.0 m

Digital Toolbox

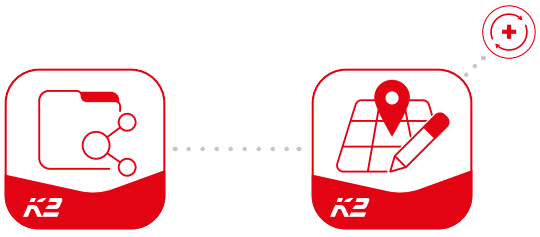

Do you already know our digital services? Use our K2 DocuApp now and record the first important data directly at the customer or project site. Simply transfer the data to our online planning software K2 Base. Here you can plan your project easily, safely and quickly. You receive a detailed project report with assembly plan and static report. The K2+ interface enables seamless project data transfer to the planning tools of other manufacturers. With the K2 DocuApp, project documentation is done quickly and easily - without annoying paperwork.

Get started and register now:

docuapp.k2-systems.com

base.k2-systems.com

General safety information

Please note that our general mounting instructions must be followed at all times and can be viewed online at k2-systems.com.

- The equipment may only be installed and operated by qualified and adequately trained installers.
- Prior to installation, ensure that the product complies with on-site static loading requirements.
  For roof-mounted systems, the roof load-bearing capacity must always be checked.
- National and local building regulations and environmental requirements must be adhered to.
- Compliance with health and safety regulations, accident prevention guidelines and applicable standards is required.
  - Protective equipment such as safety helmet, boots and gloves must be worn.
  - Roofing works must be in accordance with roofing regulations utilising fall protection safeguards when eaves height exceeds 3 m.
  - At least two people must be present for the duration of the installation work in order to provide rapid assistance in the event of an emergency.
- K2 mounting systems are continuously developed and improved and the installation process may thereby change at any time. Prior to installation consult our website at k2-systems.com for up-to-date instructions.
  We can send you the latest version on request.
- The assembly instructions of the module manufacturer must be adhered to.
- Equipotential bonding/grounding/earthing between individual parts is to be performed according to country specific standards, as well as national laws and regulations.
- At least one copy of the assembly instructions should be available on site throughout the duration of the installation.
- Failure to adhere to our general safety and assembly instructions and not using all system components, K2 is not liable for any resulting defects or damages. We do not accept liability for any damage resulting in the use of competitor's parts. Warranty is excluded in such cases.
- German law shall apply excluding the UN Convention on CISG. Place of venue is Stuttgart. Our General Terms of Business apply.
- If all safety instructions are adhered to and the system is correctly installed, there is a product warranty entitlement of 12 years! We strongly recommend reviewing our terms of guarantee, which can be viewed at k2-systems.com.
  We will also send this information on request.
- Dismantling of the system is performed in reverse order to the assembly.
- K2 stainless steel components are available in different corrosion resistance classes. Each structure or component must be carefully checked for possible corrosion exposure.

The following guidelines apply

This system can be used without further testing by K2 Systems in the following standard conditions. The system is also suitable for higher requirements. However, if a value exceeds the standard conditions, please contact K2 Systems.

Planning with K2 Base

Please plan a flat roof with covering "membrane, gravel..." and Dome 6 Classic/Classic LS system. Pay attention to the correct roof pitch and direction of the roof pitch. After completing the calculation, download the base file (your-file.k2o) and send it to service@k2-systems.de or your personal contact. Be sure to include the high bead spacing and width as well as the sheet metal quality and thickness.
We will then generate a manual calculation for you and send it to you.

Roof requirements

- This system can be installed on all trapezoidal sheet metal roofs with a roof pitch of up to 10°. The angle of elevation is 10°.
- Minimum tensile strength aluminium: 165 N/mm²; steel grade at least S235 GD.
- Min. 22 mm high crest width

Static requirements

- Sufficient holding force of the roof covering on the supporting or substructure.
- For framed modules with a frame height of 30 - 50 mm
- Modules with the following dimensions can be used:
  - length 1448 - 2390 mm
  - width 950 - 1170 mm

Important installation instructions

- On site, the general standards and regulations for lightning protection must be observed and, if necessary, a lightning protection concept must be drawn up by a specialist (use lightning protection clamp if necessary). Country-specific regulations must be observed.
- If the trapezoidal sheet metal is fastened with calottes, do not screw the BasicClips onto them. Instead, mount all BasicClips of this row offset on the trapezoidal sheet metal.
- At least every fourth or a quarter of all BasicClips must be mounted rotated by 180°.
- In the case of rail joints, it is imperative that the BasicClips are fastened to the nearest high crests on both sides.
- After 9.60 m, a thermal break must be made. The minimum distance between two rails should be 30 mm.
- Attention. The modules must never be clamped over the thermal expansion joint.
- The number of BasicLocks per module block can be taken from the static calculation of K2 Systems static calculation.
- The minimum distance from components/ MK2 to the end of the rail must be 20 mm.
- A minimum distance of 600 mm to the roof edge must be maintained for building heights > 5 m.
- Tightening torque of all module clamps 14 Nm.
- After extraordinary events, such as storms, heavy rain, earthquakes, etc., the system must be inspected by a specialist company. If plastic deformation, e.g. in the area of the module clamps, or damage is detected during the inspection, these components must be replaced with new ones.
- Observe the module manufacturer's specifications for the clamping area and the installation of the modules (see the manufacturer's installation instructions). Check whether there is a manufacturer's approval for clamping in the corner area.
- Make sure that the drainage of rainwater is not obstructed.
- The lightning current carrying capacity of the system has been verified according to the test procedures of DIN EN 50164-1 (see "Recommendation potential equalisation and lightning protection").

Components

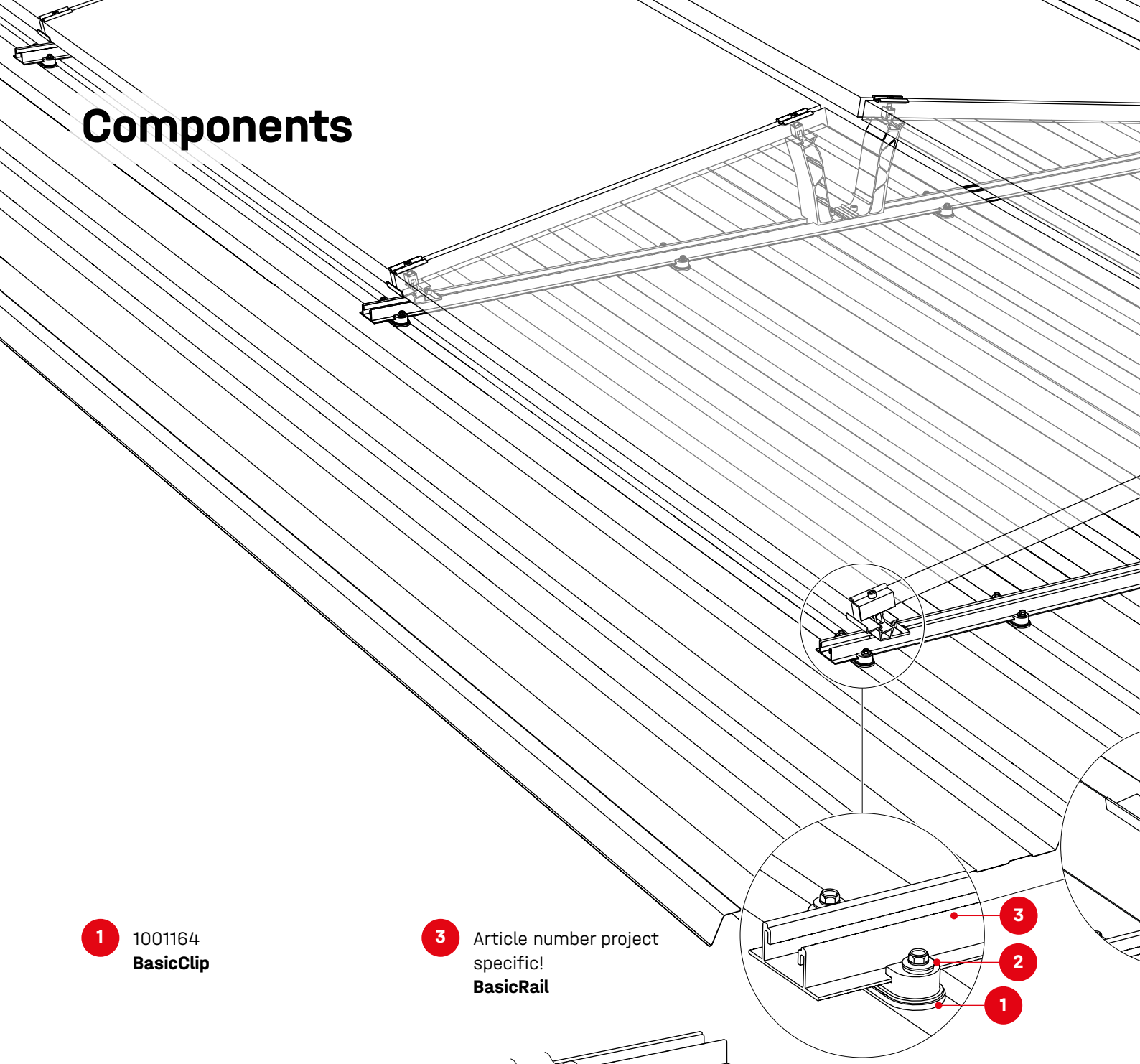

1 1001164
BasicClip

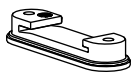

3 Article number project specific!
BasicRail

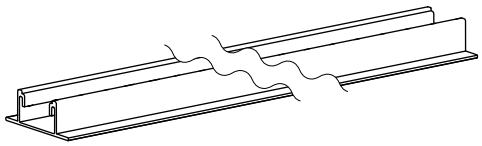

2 1005193
Thread-forming screw incl. sealing washer 6×38



4 1001643 + 2001729
MK2 Slot nut with clip + Allen bolt M8×20

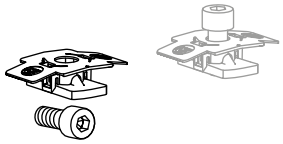

5 2003243
Dome 6.10 SD

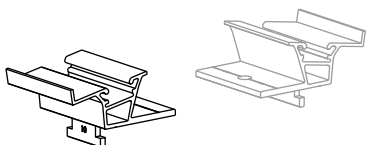

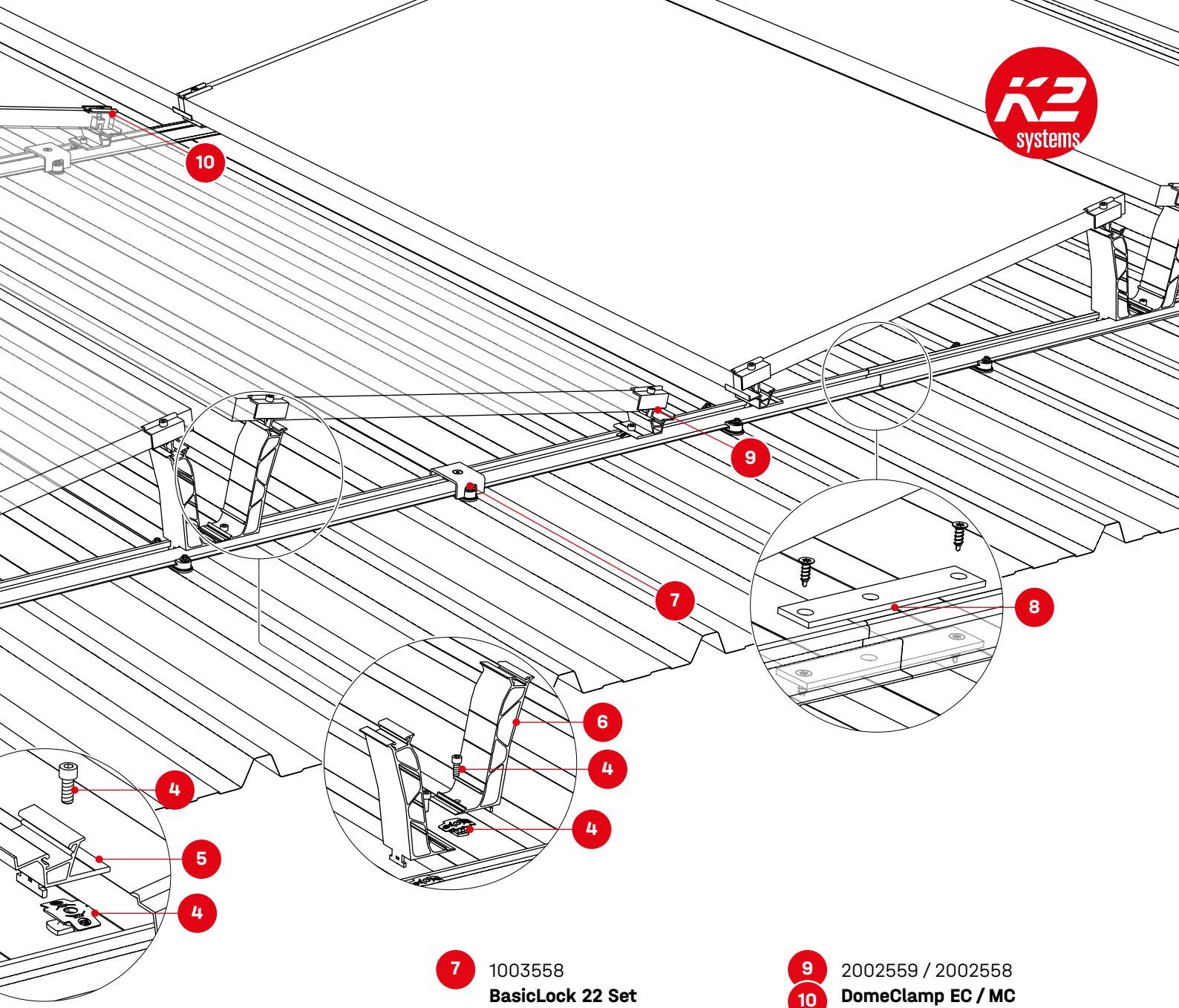

7 1003558
BasicLock 22 Set

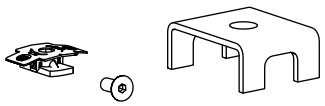

9 2002559 / 2002558
10 **DomeClamp EC / MC**

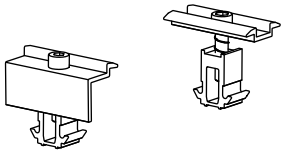

Optional

6 2004125
Dome 6.10 Peak

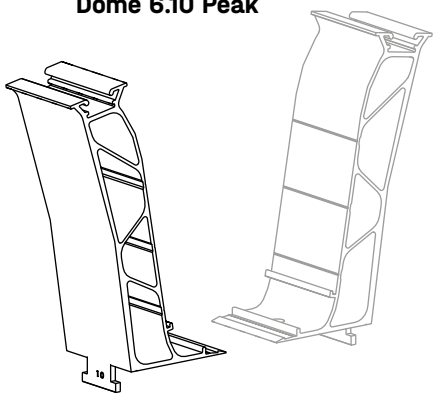

8 1003571 / 1006039
Rail connector set
BasicRail / Dome
FlatConnector Set

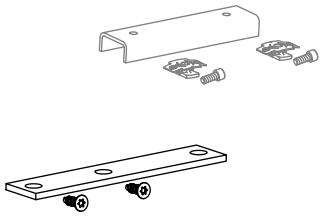

2002870
Cable-Manager

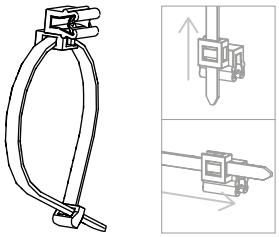

2003542
TerraGrif K2MI
Duo 18

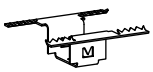

Assembly

Module fixation and distances mounting rails

Corner clamping

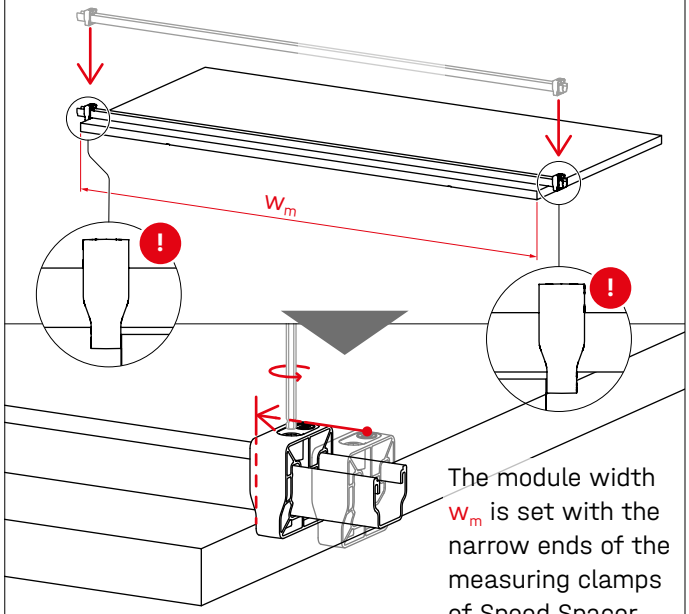

The module width w_m is set with the narrow ends of the measuring clamps of Speed Spacer.

Long side clamping

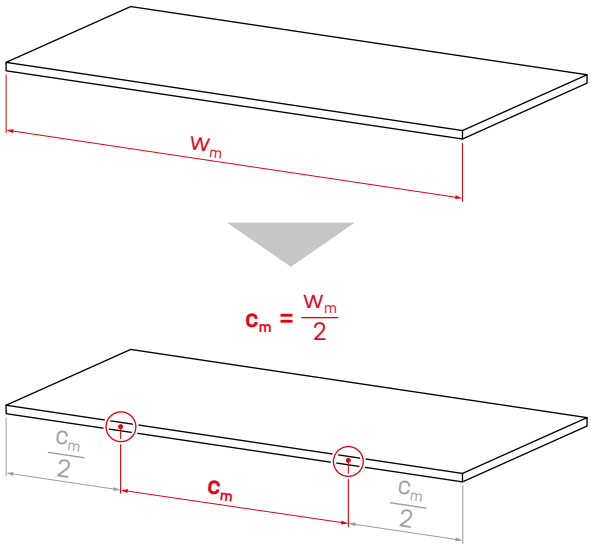

Rail distance
Corner clamping

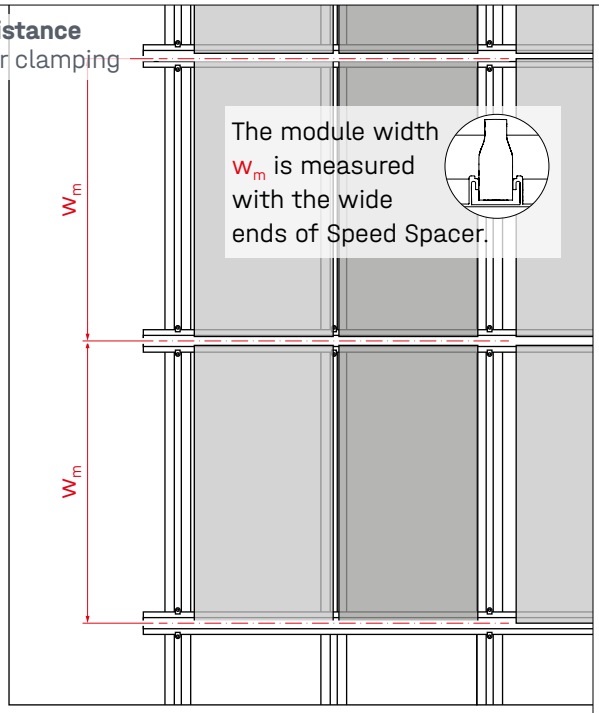

The module width w_m is measured with the wide ends of Speed Spacer.

Rail distance
Long side clamping

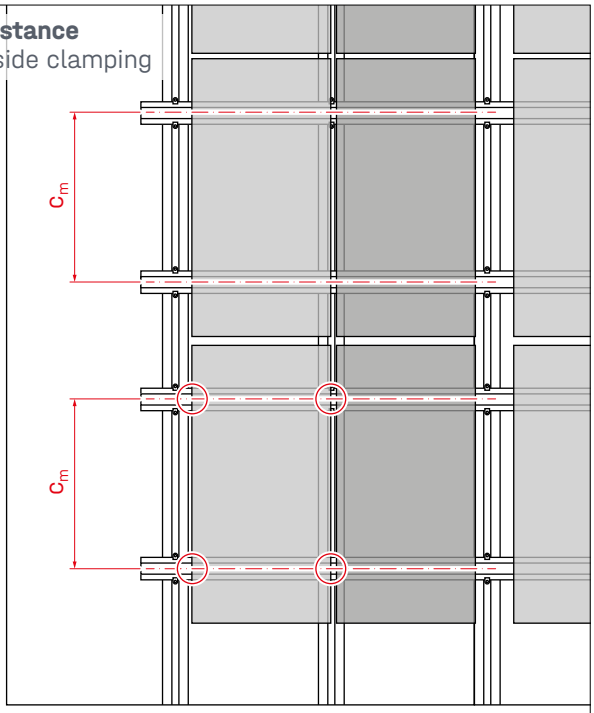

Installation BasicRail base rails

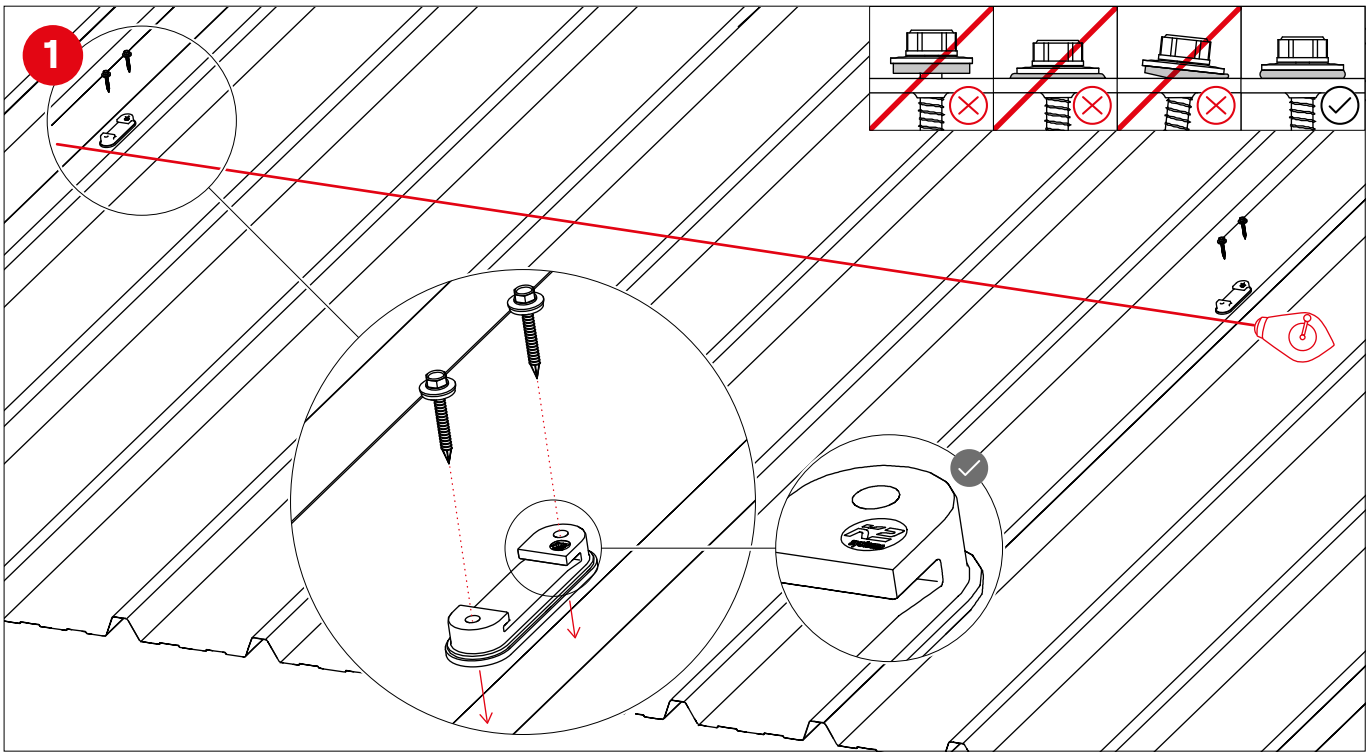

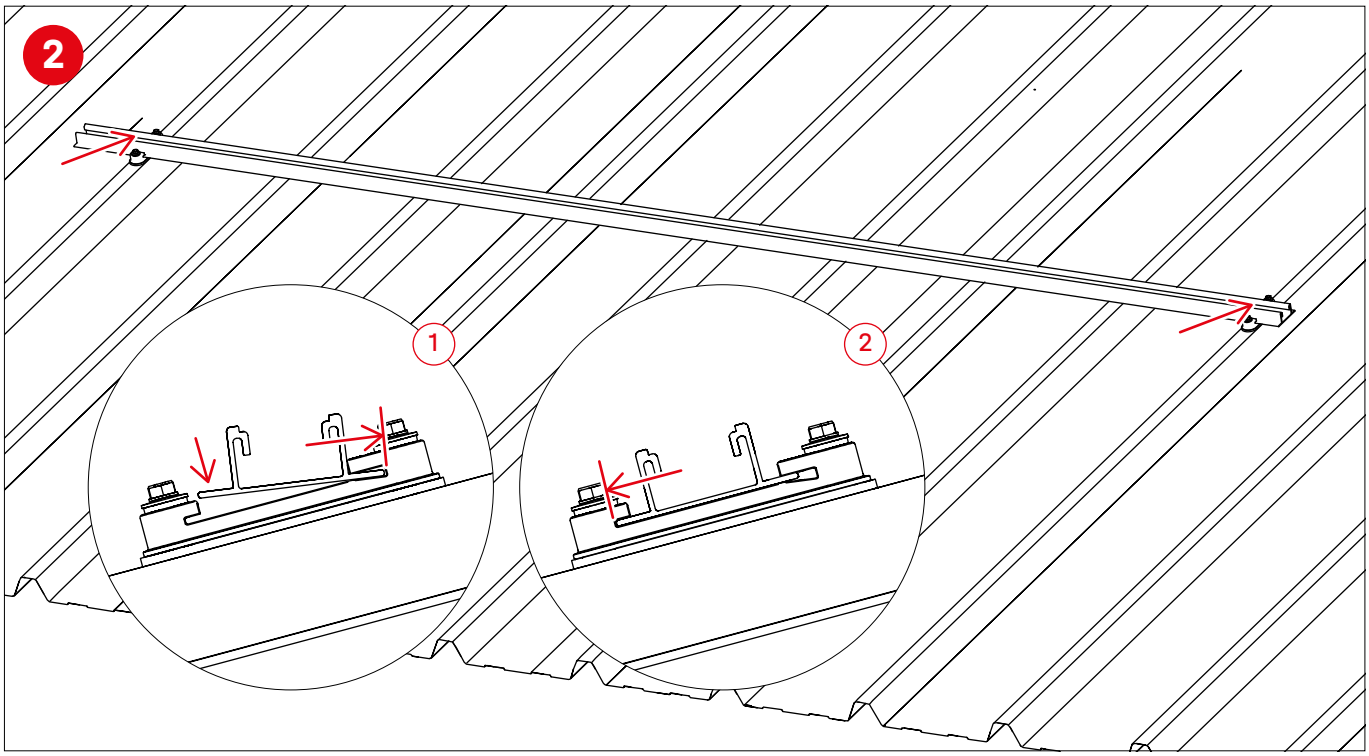

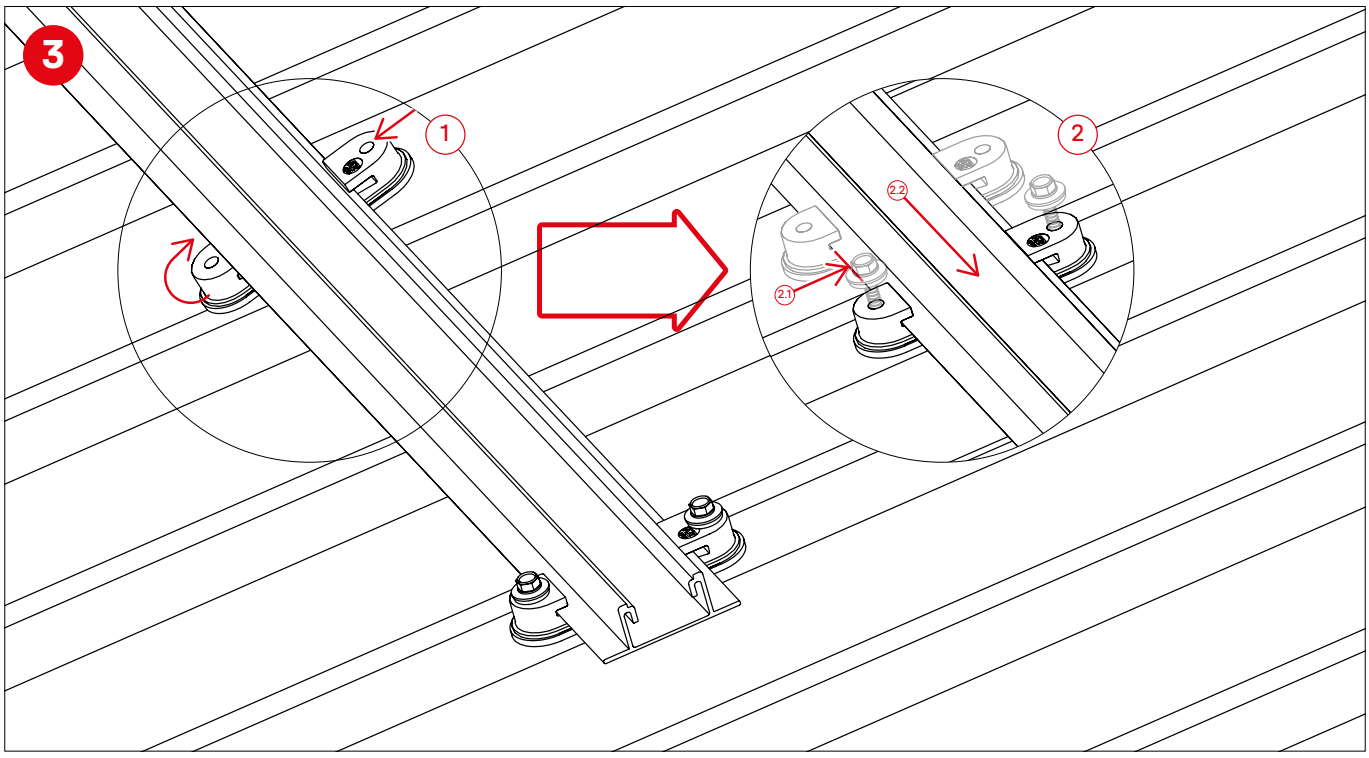
3
1
2
2.1
2.2

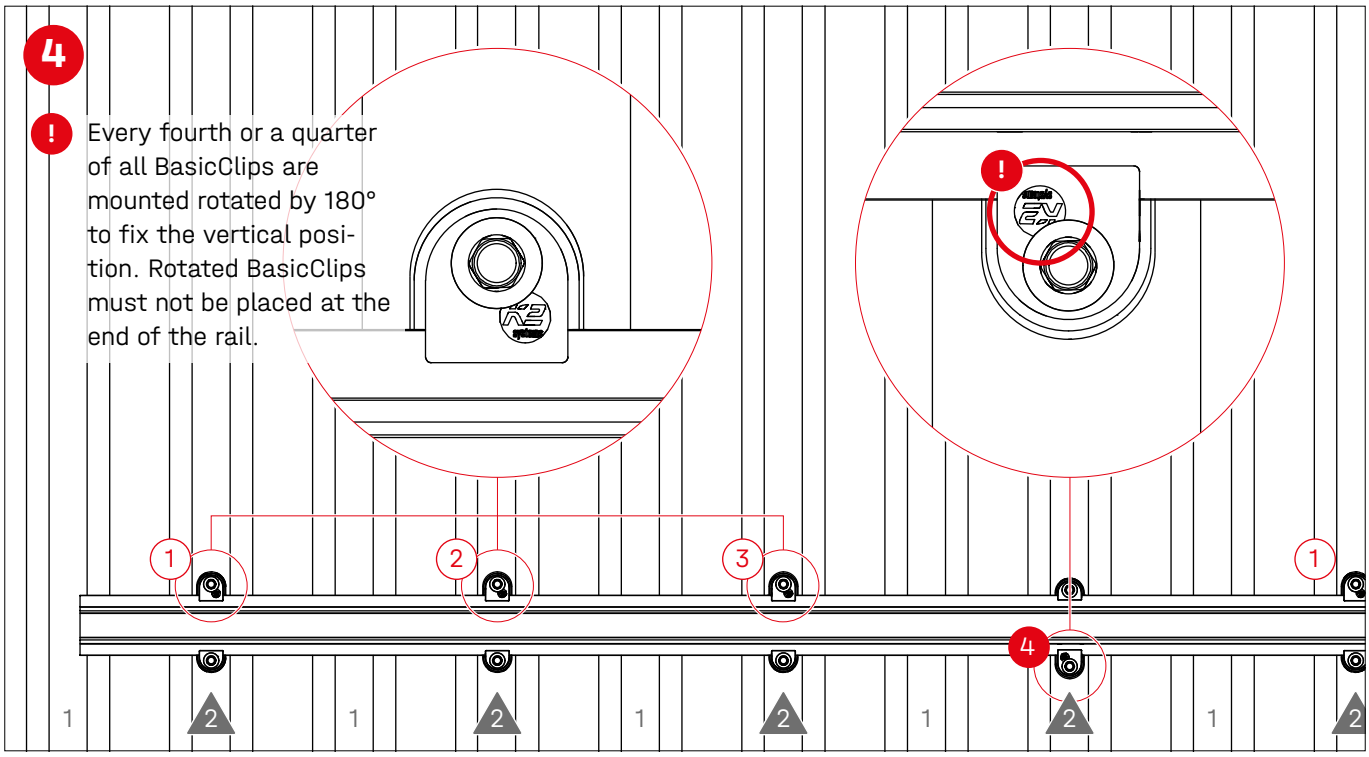
4
!
Every fourth or a quarter of all BasicClips are mounted rotated by 180° to fix the vertical position. Rotated BasicClips must not be placed at the end of the rail.
!
1
2
3
4
1
2
1
2
1
2
1
2
1
2


5
Distance BasicClips:See calculation from K2 Systems!
1
2

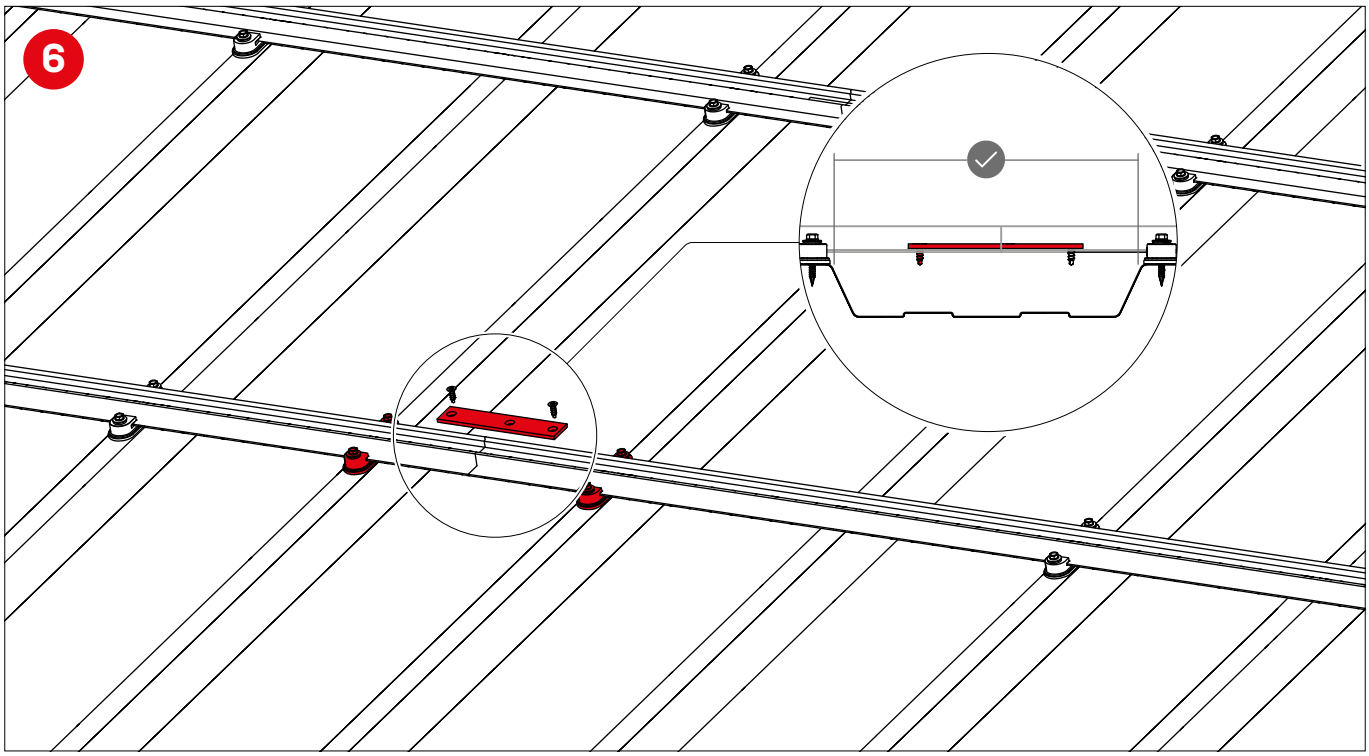
6

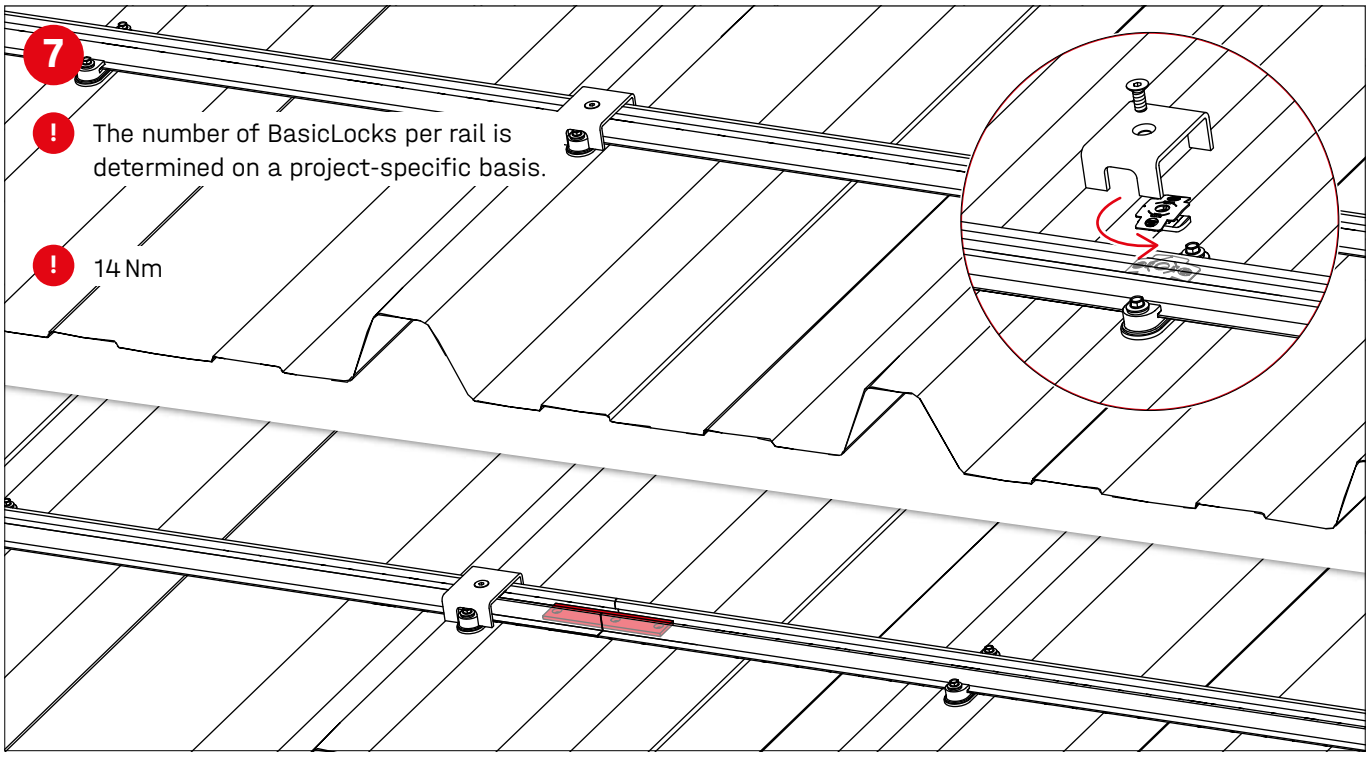
7
The number of BasicLocks per rail is determined on a project-specific basis.
14 Nm

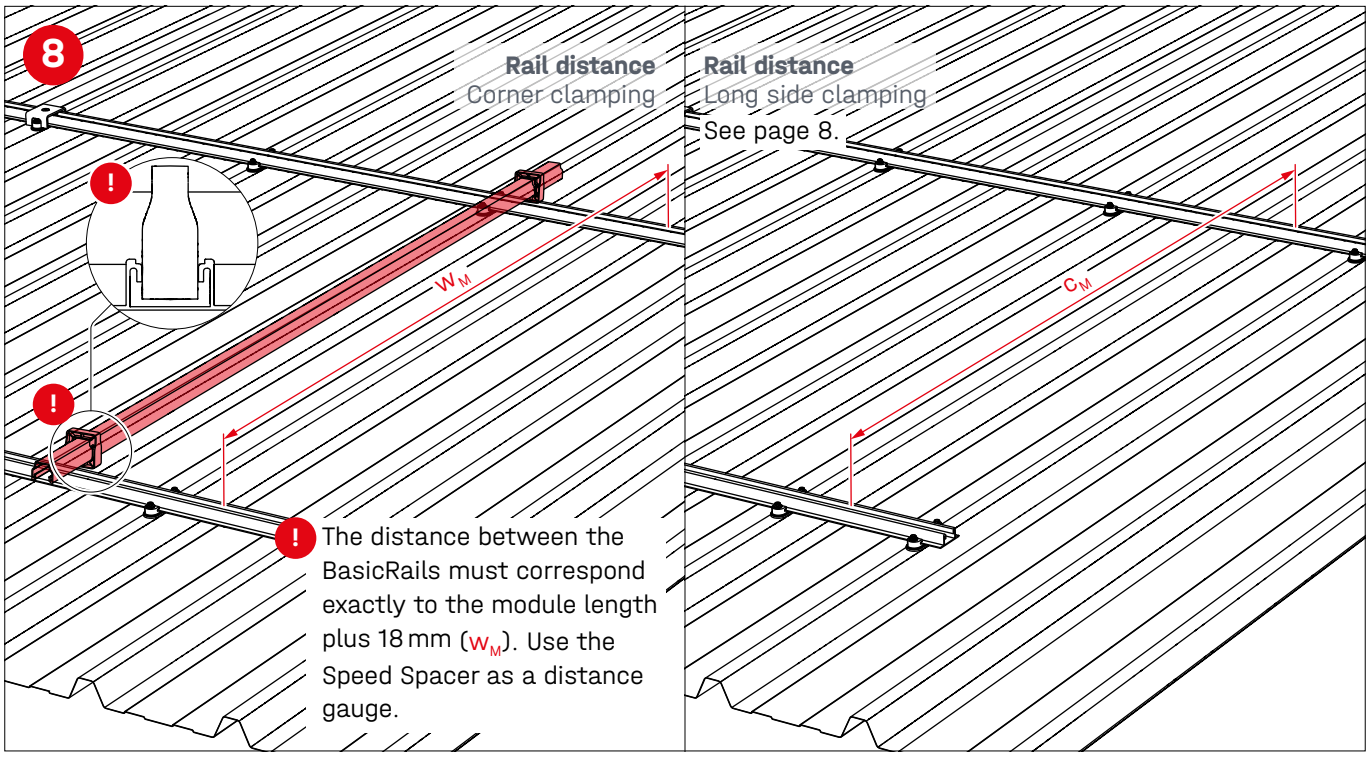
8
Rail distance
Corner clamping
W_M
The distance between the BasicRails must correspond exactly to the module length plus 18 mm (W_M). Use the Speed Spacer as a distance gauge.
Rail distance
Long side clamping
See page 8.
C_M

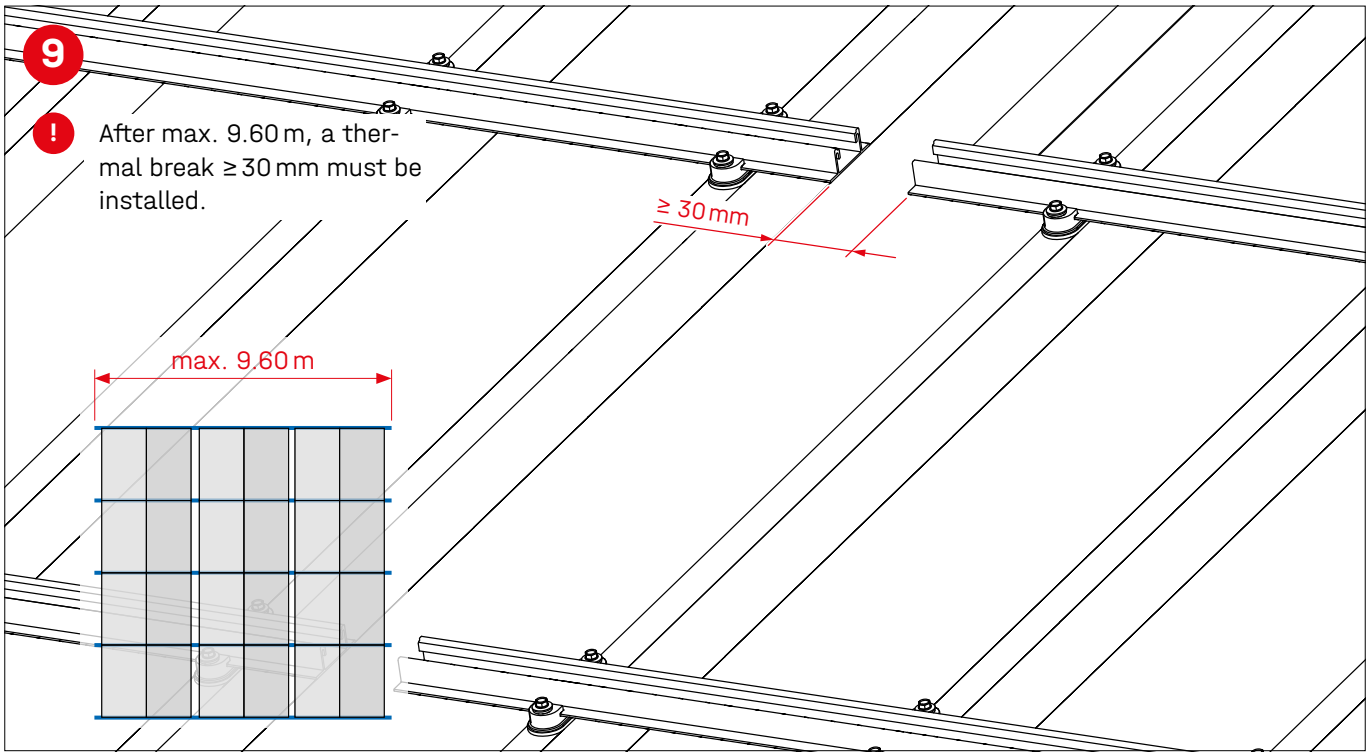
9
After max. 9.60 m, a thermal break ≥ 30 mm must be installed.
≥ 30 mm
max. 9.60 m

Assembly D-Dome 6 elevation

10

! K2 Base automatically calculates the pre-assembly dimensions M_1 / M_2 and outputs them in the assembly plan. These must be adhered to during assembly.

For M_1 / M_2 we recommend an assembly jig!

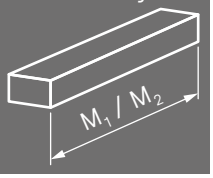

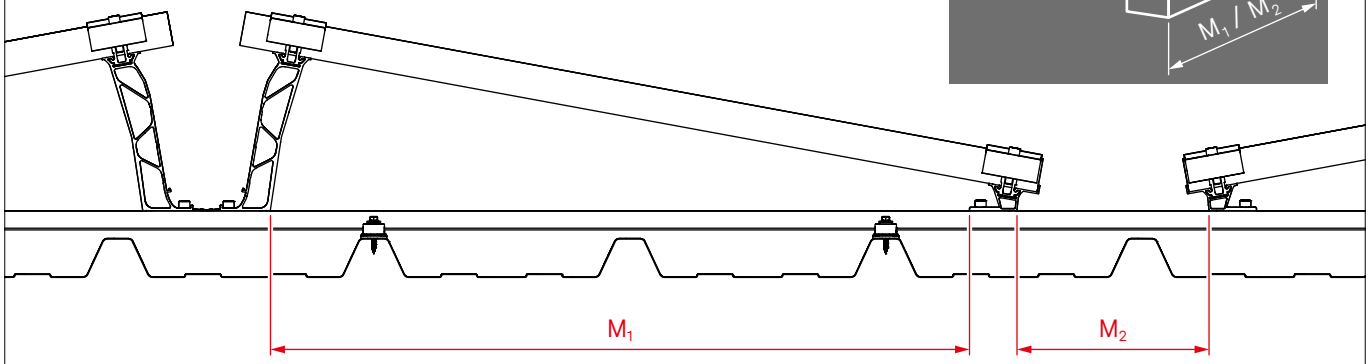

11

! 14 Nm

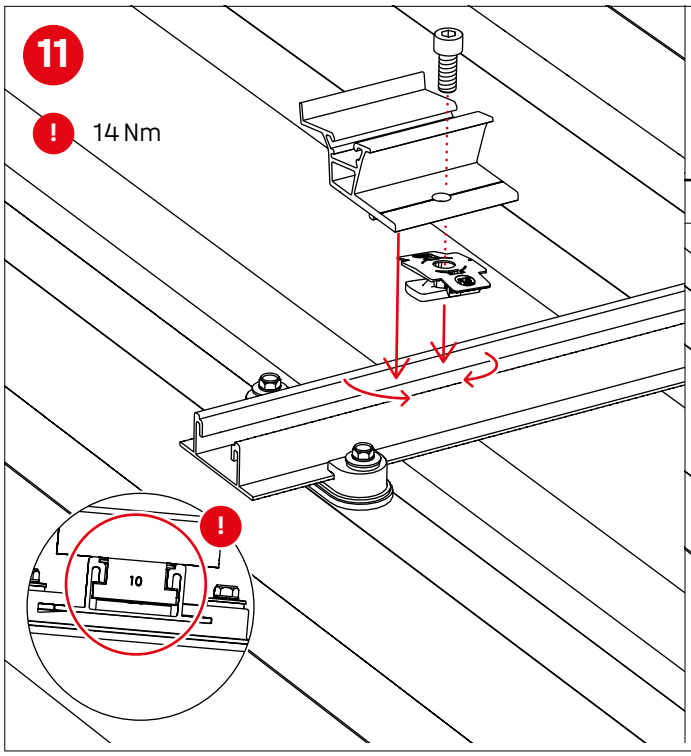

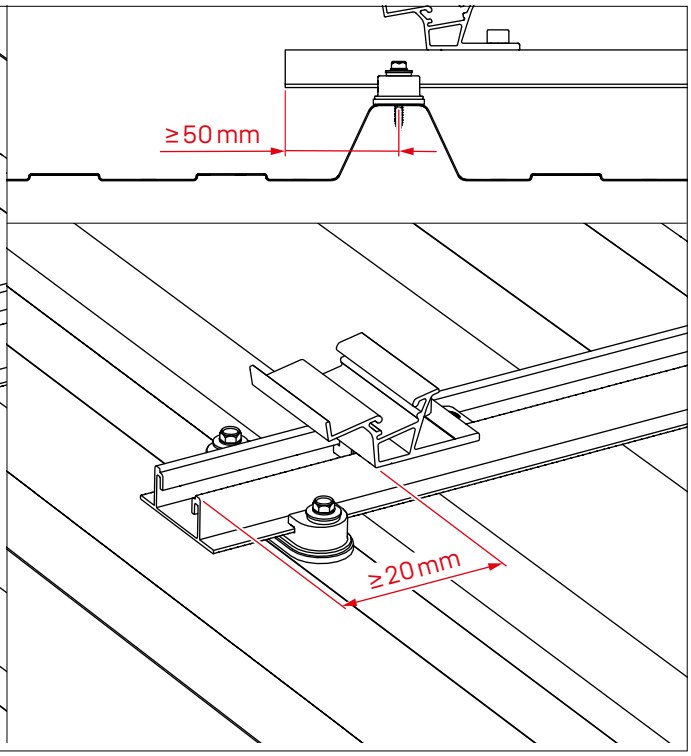

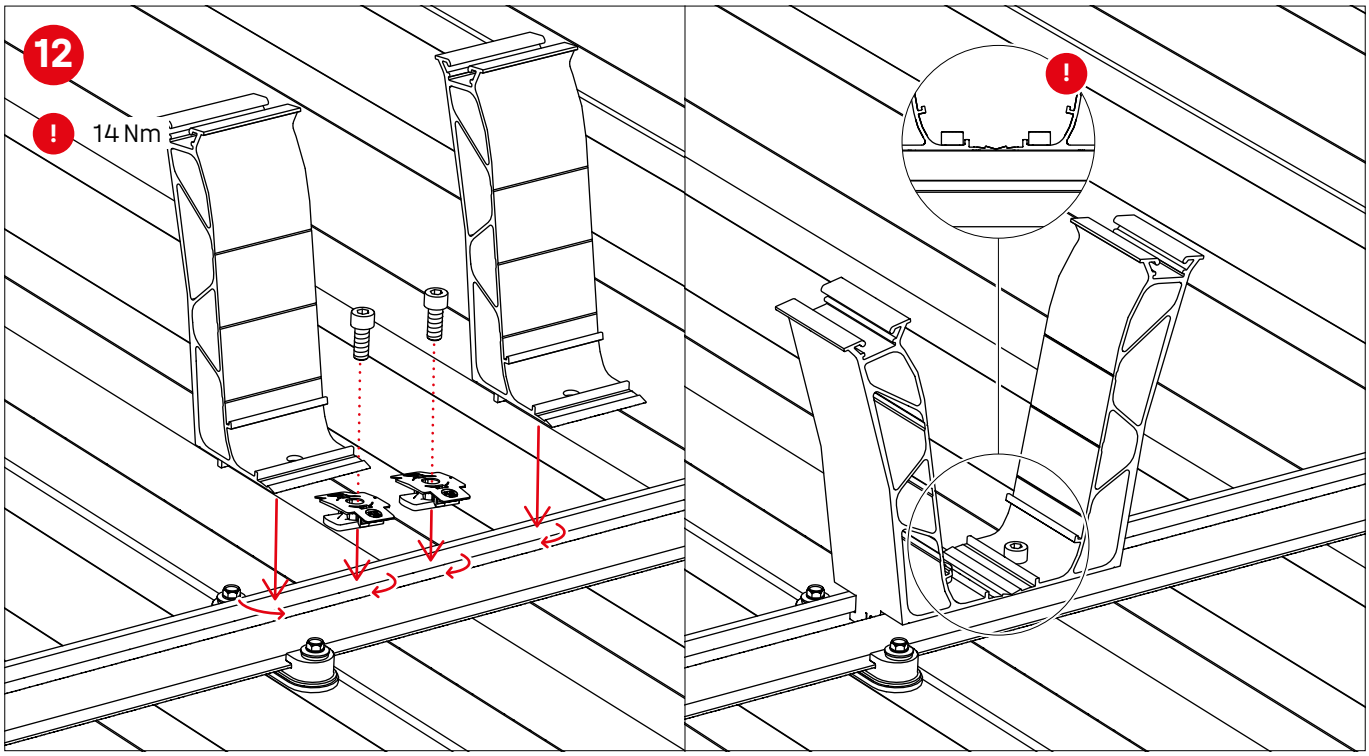
12
14 Nm

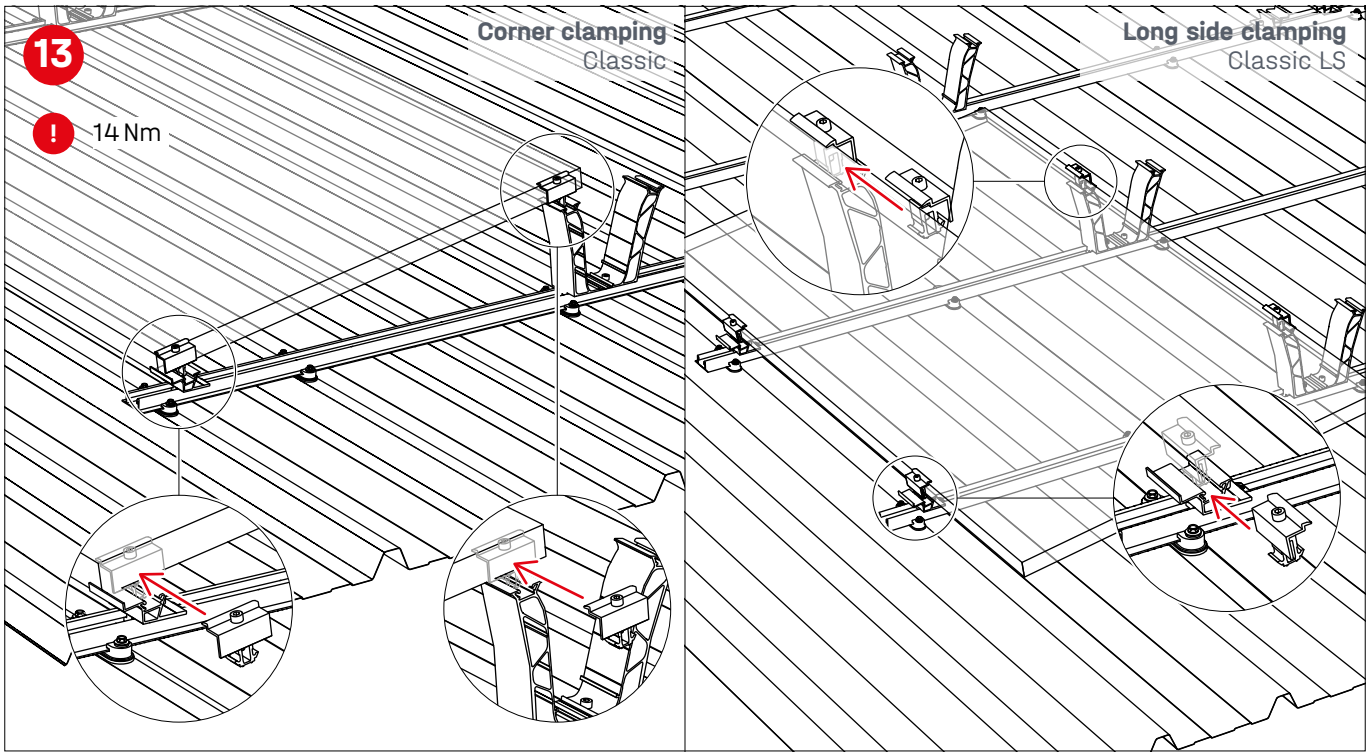
13
14 Nm
Corner clamping
Classic
Long side clamping
Classic LS

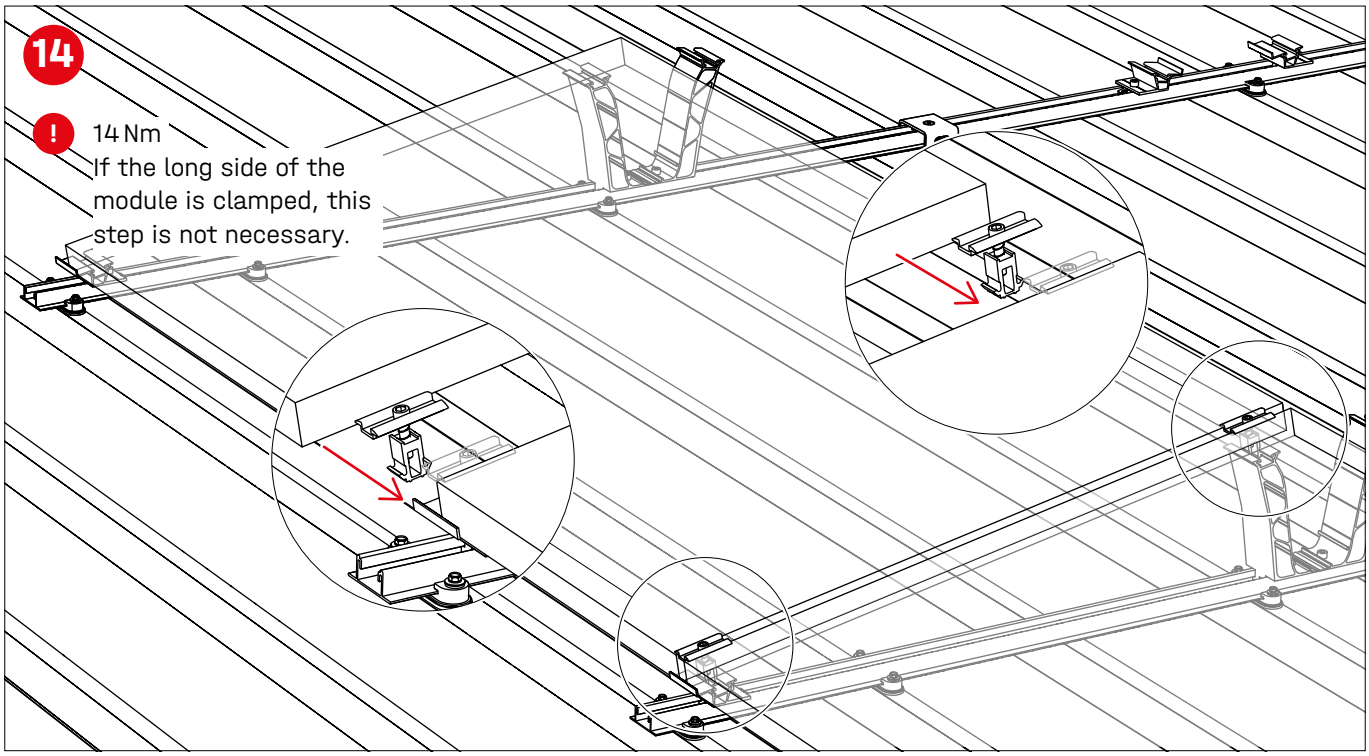
14
14 Nm
If the long side of the module is clamped, this step is not necessary.

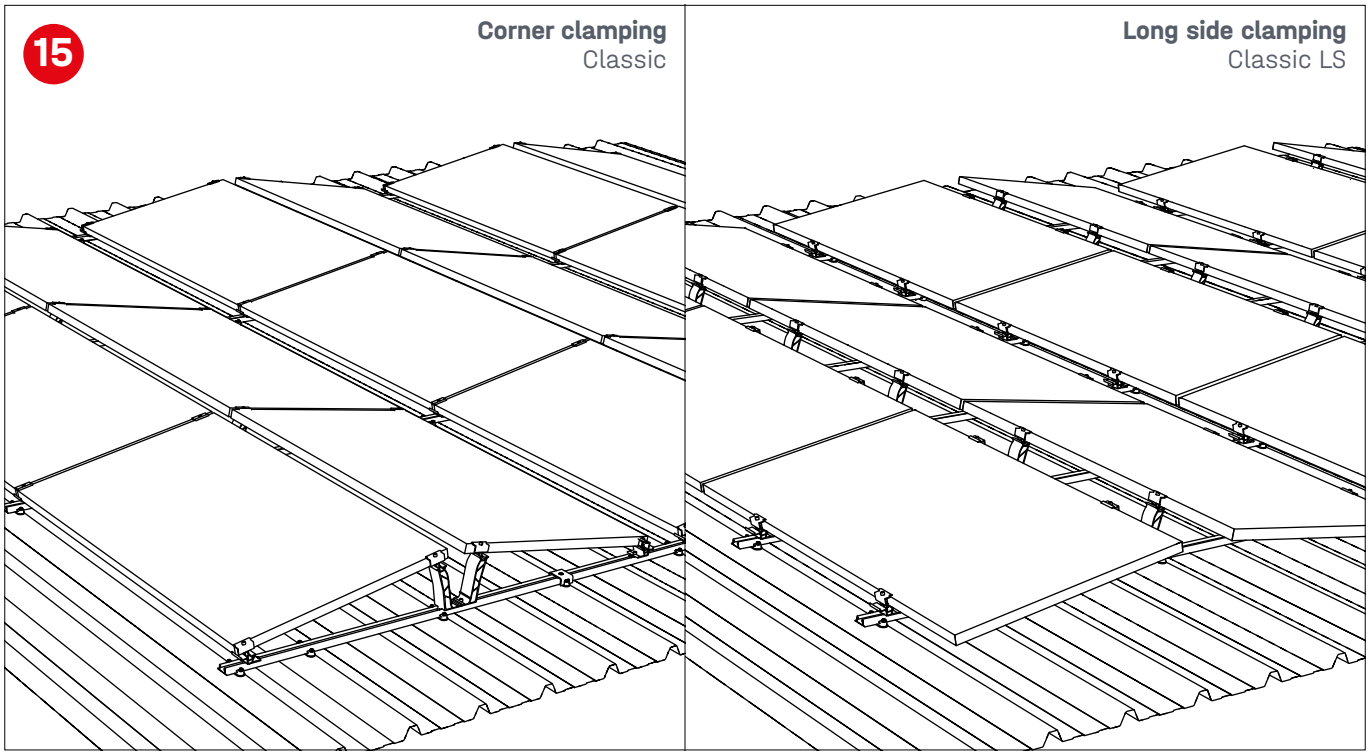
15
Corner clamping
Classic
Long side clamping
Classic LS

Notes

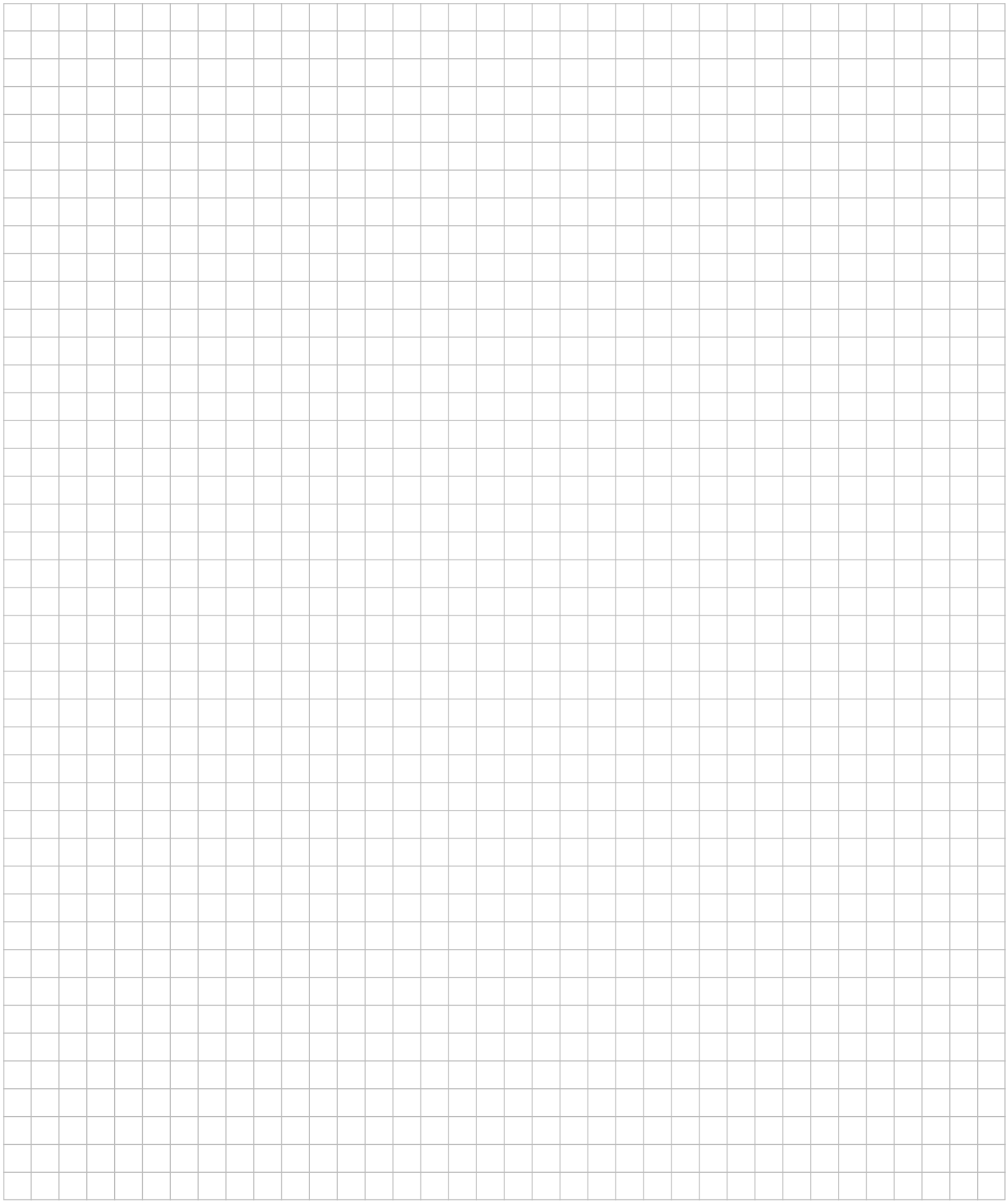

Notes

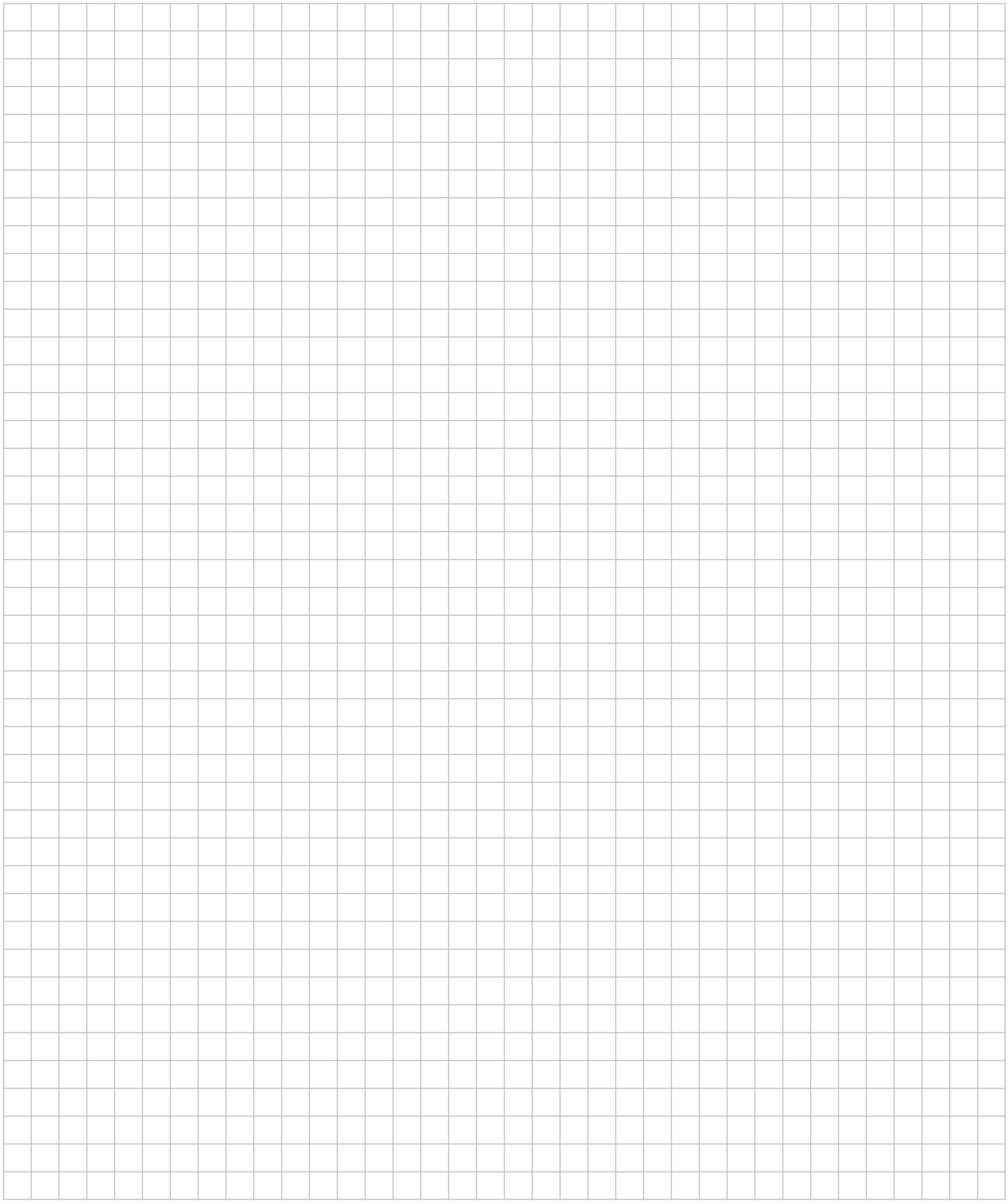

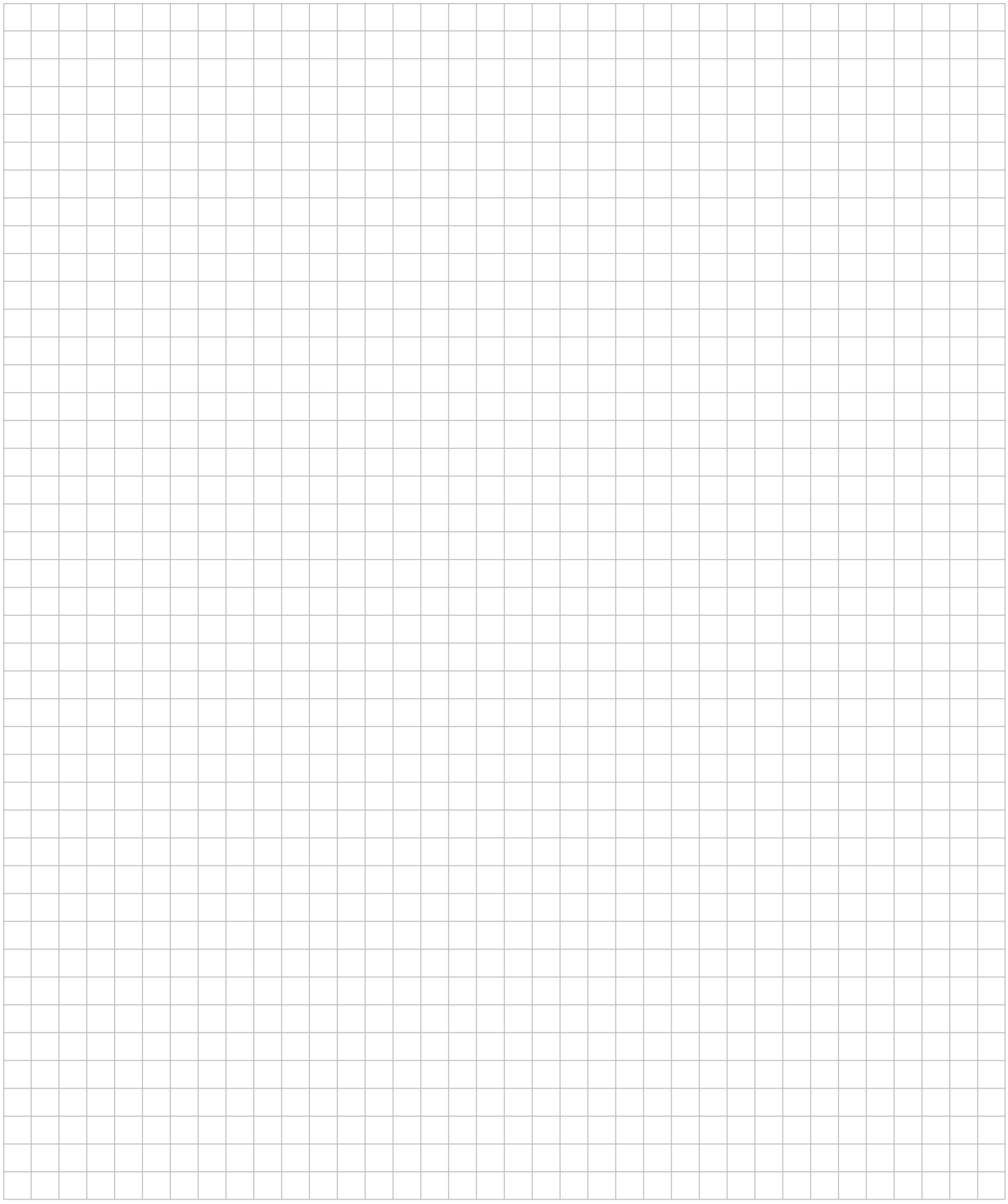

Thank you for choosing a K2 mounting system.

Mounting ystems from K2 Systems are quick and easy to install. We hope these instructions have helped. Please contact us with any questions or suggestions for improvement. Our contact data:

- **k2-systems.com/en/contact**
- **Service Hotline: +49 (0)7159 42059-0**

Our General Terms of Business apply. Please refer: k2-systems.com

K2 Systems GmbH
Industriestraße 18 · 71272 Renningen · Germany
+49 (0) 7159 - 42059 - 0 · info@k2-systems.com · k2-systems.com

BasicRail D-Dome 6 Assembly EN V1 | 0823 · Subject to change
Product illustrations are exemplary and may differ from the original.