We support PV systems

D-Dome System

ASSEMBLY MANUAL

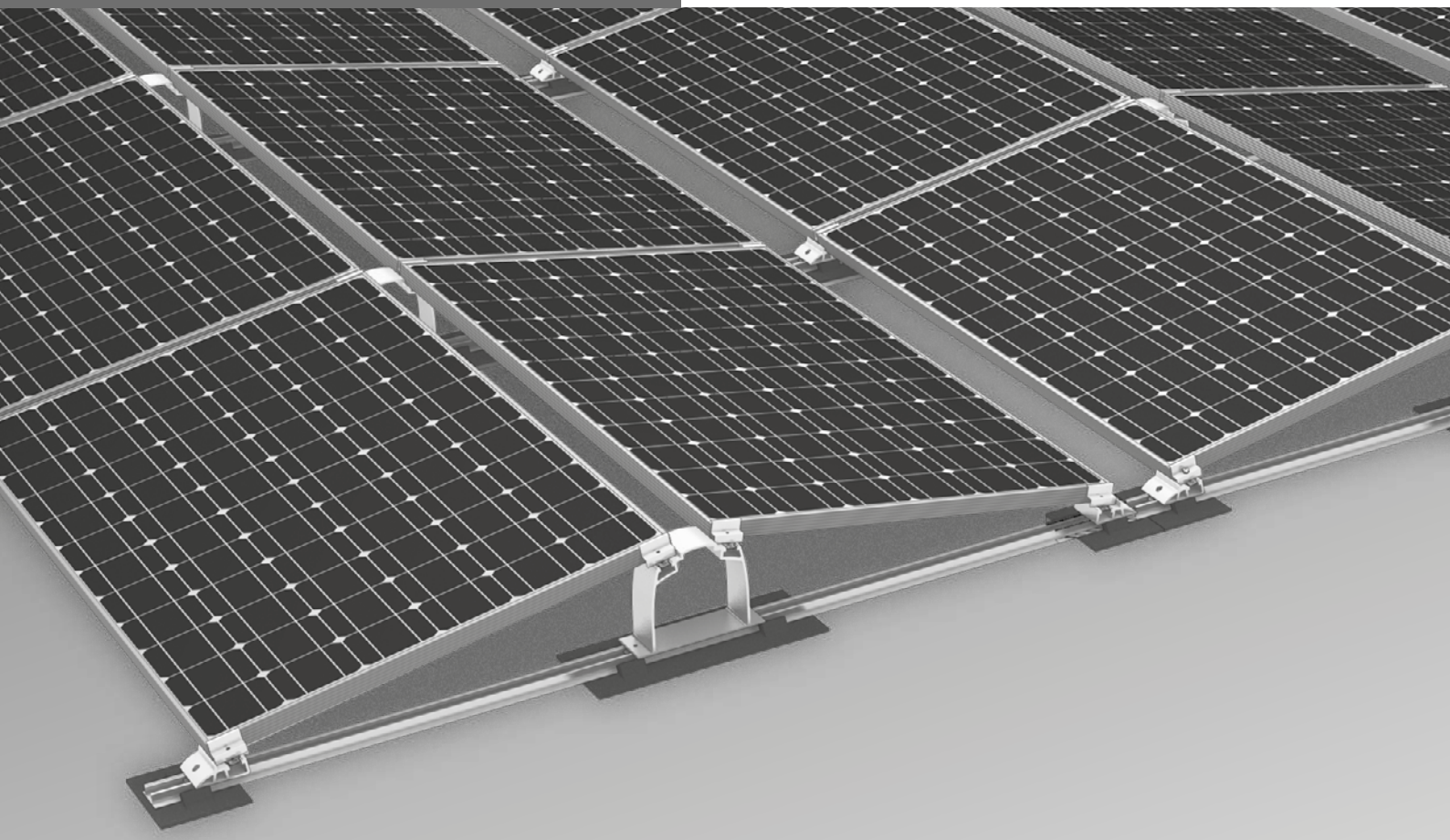

Content

/ Werkzeugübersicht 3

/ General safety information 4

/ The following guidelines apply 5
- Planning with K2 Base 5
- Roof requirements 5
- Static requirements 5
- Important mounting instructions 5

/ Required Materials 6
- Optional components for ballasting: 8
- System variant ¼ clamping unit for non-approved modules or higher load requirements. Additional required material: 8

/ Assembly 9

/ Alternative system variant: ¼ clamping unit 16

/ Notes 19

Quality tested – several certifications

K2 Systems stands for secure connections, highest quality and precision. Our customers and business partners have known that for a long time. Independent institutes have tested, confirmed and certified our capabilities and components.

Please find our quality and product certificates under:
www.k2-systems.com/en/technical-information

Tools overview

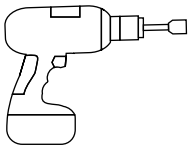

6 mm

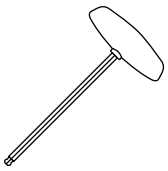

6 mm



6 - 30 Nm
(4.5 - 22.2 lb-ft)

6 mm

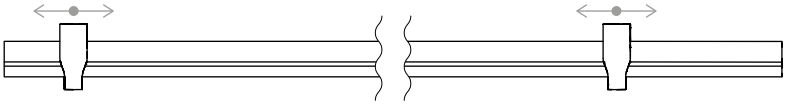

Dome Speed Spacer · 2003253
Distance template for module lengths

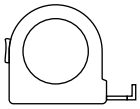

≥ 3,0 m



≥ 6,0 m

K2 App and Base – Digital planning workflow

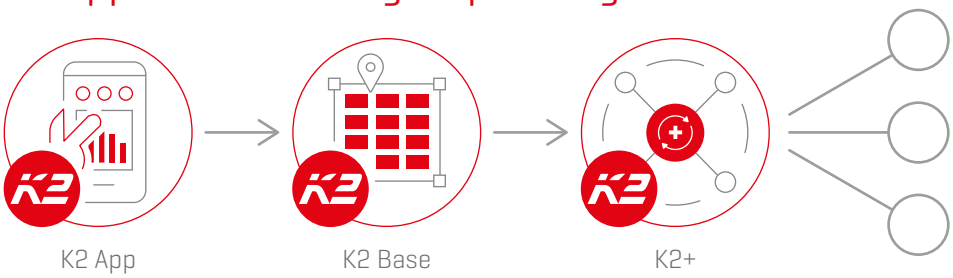

K2 App | K2 Base | K2+

Do you already know our digital services? Use our K2 Roof Check App now and record the first important data directly at the customer or project site. Simply transfer the data to our online planning software K2 Base. Here you can plan your project easily, safely and quickly. You receive a detailed project report with assembly plan and static report.
The K2+ interface enables seamless project data transfer to the planning tools of well-known inverter manufacturers or yield planning tools.

Get started and register now:

app.k2-systems.com

base.k2-systems.com

General safety information

Please note that our general mounting instructions must be followed at all times and can be viewed online at k2-systems.com/en/technical-information

- The equipment may only be installed and operated by qualified and adequately trained installers.
- Prior to installation, ensure that the product complies with on-site static loading requirements.
  For roof-mounted systems, the roof load-bearing capacity must always be checked.
- National and local building regulations and environmental requirements must be adhered to.
- Compliance with health and safety regulations, accident prevention guidelines and applicable standards is required.
  · Protective equipment such as safety helmet, boots and gloves must be worn.
  · Roofing works must be in accordance with roofing regulations utilising fall protection safeguards when eaves height exceeds 3 m.
  · At least two people must be present for the duration of the installation work in order to provide rapid assistance in the event of an emergency.
- K2 mounting systems are continuously developed and improved and the installation process may thereby change at any time. Prior to installation consult our website at
  www.k2-systems.com/en/technical-information for up-to-date instructions.
  We can send you the latest version on request.
- The assembly instructions of the module manufacturer must be adhered to.
- Equipotential bonding/grounding/earthing between individual parts is to be performed according to country specific standards, as well as national laws and regulations.
- At least one copy of the assembly instructions should be available on site throughout the duration of the installation.
- Failure to adhere to our general safety and assembly instructions and not using all system components, K2 is not liable for any resulting defects or damages. We do not accept liability for any damage resulting in the use of competitor's parts. Warranty is excluded in such cases.
- K2 Systems GmbH reserves the right to exclude liability in case of disregard of our General Safety Instructions as well as in case of installation or mounting of components of a competitor.
- If all safety instructions are adhered to and the system is correctly installed, there is a product warranty entitlement of 12 years! We strongly recommend reviewing our terms of guarantee, which can be viewed at www.k2-systems.com/en/technical-information
  We will also send this information on request.
- Dismantling of the system is performed in reverse order to the assembly.
- K2 stainless steel components are available in different corrosion resistance classes. Each structure or component must be carefully checked for possible corrosion exposure.

The following guidelines apply

The D-Dome System can be installed under the following conditions. Please clarify in advance whether the manufacturer authorises clamping on the short side. For the module list, please contact your account manager or www.k2-systems.com.

Planning with K2 Base

We recommend our free online software K2 Base for the planning. In five steps, you can plan the right assembly system and get a construction recommendation, parts list and the structural analysis report. Simply register and start planning: base.k2-systems.com

Roof requirements

- This system can be used on all established flat roof constructions with a pressure resistant substrate and a roof pitch of up to 5°. From a roof pitch of 3.1°, the system must be fixed mechanically. See installation instructions for roof anchors.
- The roof surface must be clean and dry. Roof irregularities must be corrected or removed where appropriate.
- The coefficient of friction of the roof must be determined on-site. See video k2-systems.com/en/friction-coefficient

Static requirements

- Sufficient roof structure load-bearing capacity, as well as insulation pressure capacity
- For framed modules with a frame height of 30 - 50 mm
- Permissible module dimensions: Length 1386 -2300 mm, width 950 -1100 mm

Important mounting instructions

- On-site general standards and regulations for lightning protection must be observed and consultation with a specialist to create a lightning protection concept is recommended (use lightning protection clamp if necessary).
- External influences that act on this system are only reflected in the design of the ballast to a limited degree. For instance, unevenness, thermal elongation, moss, water accumulation and ageing of the sheeting cannot be considered, although these factors might also precipitate system displacement under certain circumstances. We recommend you check whether the system requires additional mechanical attachment, as the impact of these influences may be greater on slanted roofs.
- The inclination of the Dome system is 10°.
- A minimum distance to the roof edge of 600 mm must be observed.
- At least two modules must be assembled discontiguous to use this mounting system.
- Ensure a thermal separation (distance between module blocks) after a maximum of 12 m in the module row direction and in the direction of the base rail. Note: For separation distances > 500 mm, additional ballast required.
- Tightening torque of 14 Nm for all module clamps.
- In the event of exceptional circumstances (such as storms, heavy rain, earthquakes, etc.), the system should be checked by a specialist. Should an inspection find damage or plastic deformation (such as in the module clamp area) the components must be replaced.
- Adhere to module manufacturer recommendations for clamping area and module installation (see module manufacturer instructions). Check whether manufacturer approval is available for corner clamping.
- Compatibility of building protection mats with roof covering must be checked.
- It is important to ensure that the rain water flow is not hindered.
- The lightning current capacity of the D-Dome system was verified according the test procedures in DIN EN 50164-1 (see chapter about the integration in existing lightning arrester systems).

Required Materials

In order to assemble the K2 Systems D-Dome installation system, the following listed system components are essential. The piece quantities are calculated on the basis of the respective requirements. The listed item numbers facilitate the comparison of items.

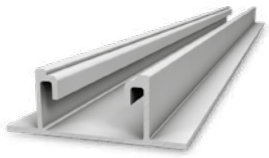

Mounting rail K2 SpeedRail 22, 6.10 m 1001163
Material: Aluminium EN AW-6063 T66



K2 FlatConnector Set 1006039
The set consists of:
- 1 FlatConnector, aluminium
- 2 Bolts with serrated under head M8x20, stainless steel
- 2 MK2 slot nut with clip, stainless steel

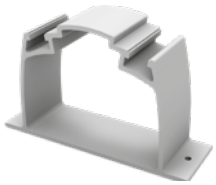

K2 D-Dome 2.0 2001962
Width: 65 mm
Material: Aluminium EN AW-6063 T66



K2 Dome SD 2.0 2001968
Width: 65 mm
Material: Aluminium EN AW-6063 T66



K2 Bolts with serrated under head 2001729
M8x20 acc. DIN EN ISO 4762
Material: Edelstahl A2, SW 6 mm



MK2 slot nut with clip 1001643
Material: Stainless steel and PA



K2 Solar Cable Manager 2002870
Accessory for module cable mounting

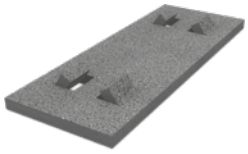

K2 building protection mat Dome 2001696
470×180×18 mm
Material: Unlaminated PUR-bonded rubber granulate

Alternatively: K2 building protection mat Dome alu 2001695
470×180×18 mm
Material: PUR-bound rubber granules with aluminium triplex foil, laminated

The respective use of a laminated or unlaminated building protection mat depends on the type of roof membrane and must be checked on site.

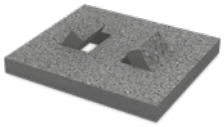

K2 building protection mat Dome SD 2001740
160×180×18 mm
Material: Unlaminated PUR-bonded rubber granulate

Alternatively: K2 building protection mat Dome SD alu 2001739
160×180×18 mm
Material: PUR-bound rubber granules with aluminium triplex foil, laminated

The respective use of a laminated or unlaminated building protection mat depends on the type of roof membrane and must be checked on site.

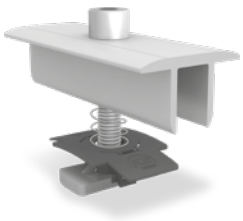

K2 Module middle clamp XS Set Item number system-specific
The Set consists of:
- 1 Middle clamp XS, aluminium mill finish/black
- 1 Allen bolt M8, stainless steel A2
- 1 MK2 solt nut with clip, stainless steel and PA
- 1 Securing washer S8, stainless steel A2

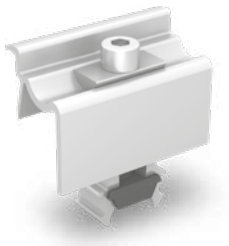

K2 universal module clamps OneEnd 2002514
Clamping range: 32-42 mm

Alternatively: Item number system-specific
K2 Module End Clamp Standard Set

Required Materials

Optional components for ballasting:

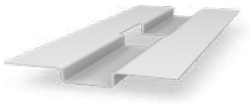

K2 SpeedPorter 2002300
Ballast support for slabs and stiffening
Material: Aluminium EN AW-6063 T66



K2 Dome Porter 1750 mm 2000081
Ballast support for slabs
Pair of L-Profiles to carry required ballast as concrete slabs or similar
Material: Aluminium

Alternatively: K2 Dome Porter 2050 mm 2001140



K2 bolts with serrated under head 2001729
M8×20 according to DIN 912/EN ISO 4762
Material: stainless steel A2, WS 6 mm



MK2 slot nut with clip 1001643
Material: Stainless steel and PA

System variant ¼ clamping unit for non-approved modules or higher load requirements. Additional required material:



K2 FlexClamp 1005873
Material: Aluminium and stainless steel A2
Two-piece clamp set for fastening the modules in the ¼ points including Allen bolt M8×25, Allen bolt M8×20, MK2 slot nut and locking washers
Suitable for module frame heights of 34 - 50 mm.
4 sets required per module.

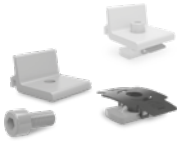

Climber Set 2003145
Material: Aluminium and stainless steel A2, SW 6 mm

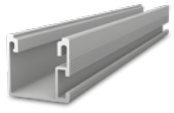

SingleRail Light 2003258
Material: Aluminium



SingleRail 36 Connector Set 2001976
Material: Aluminium and stainless steel A2, SW 6 mm

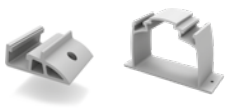

K2 D-Dome und Dome SD
Please note that for this assembly variant the number of Dome pieces increases.

Assembly

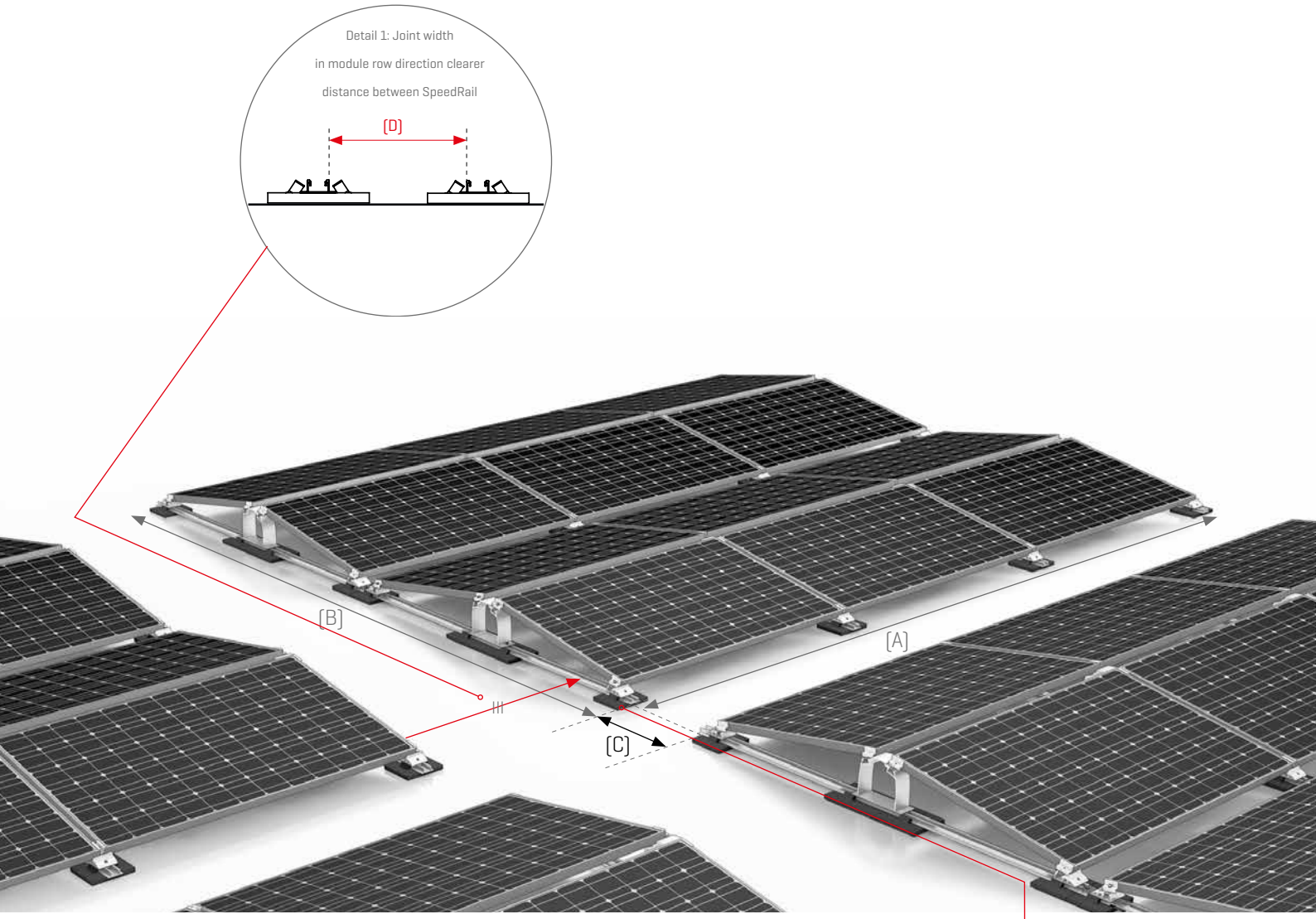

Spacing in the D-Dome System:

(A) Module block in module direction: max. 12 m
(B) Module block in rail direction: max. 12 m
(C) Gap width along the base rail: min. 20 mm
(D) Gap width between module blocks in module row direction: min. 140 mm; max. module width
(E) Distance to rail end: min. 40 mm



Assembly

1 Position SpeedRail

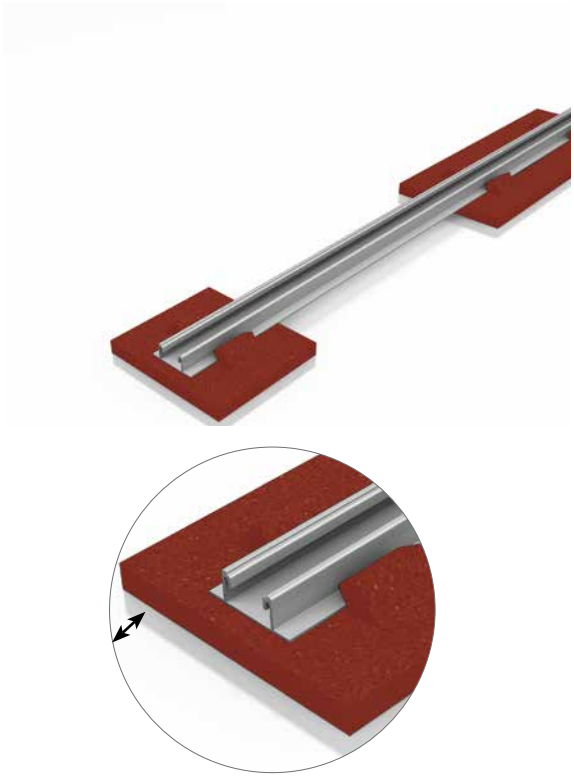

Prior to placing the SpeedRail as a base rail, insert a protection layer between the roof covering and the rail in order to avoid any damages to the roof covering. With membrane roofs the Aluminium-coated side shall face downwards. Place the Speedrail onto the protection layer without penetrating the roof. The protection must have to be placed under the load bearing components D-Dome and Dome SD.
Position the protection mats and base rail according the requirements of the array. The spacing between the mats/base rails is determined by the module dimensions (module length + 13 mm). ‚Connect' the K2SpeedRails to the protection mats via the pre-cut WINGS.
The rail ends of the K2SpeedRails must not protrude the protection mats.

Materials required: K2 SpeedRail, building protection mat Dome and Dome SD

2 Mount rail connector

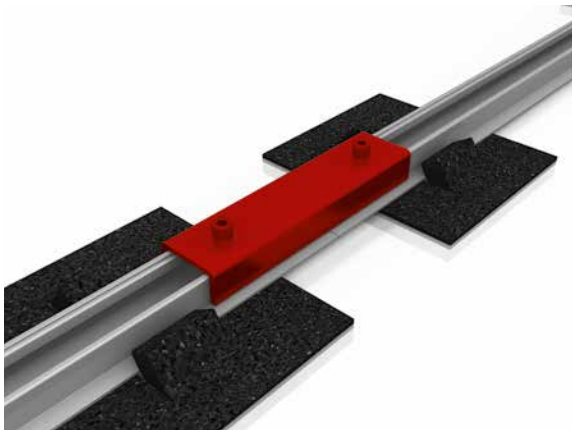

Two SpeedRails are connected at the rail joint using a rail connector. This locks the SpeedRails in the longitudinal direction. Insert 2 MK2 slot nuts in the rail and turn 90° clockwise to lock. Fasten rail connectors with two Bolts with serrated under head M8. The connector should be between the D-Dome and Dome SD.
If the rail lengths permit, the rail joint can also be positioned directly below the D-Dome without a rail connector. However, it must be ensured that the joint is between the two fittings and under no circumstances directly at the screw position.
Torque 14 Nm

Materials required: FlatConnector Set

3 Fit D-Dome

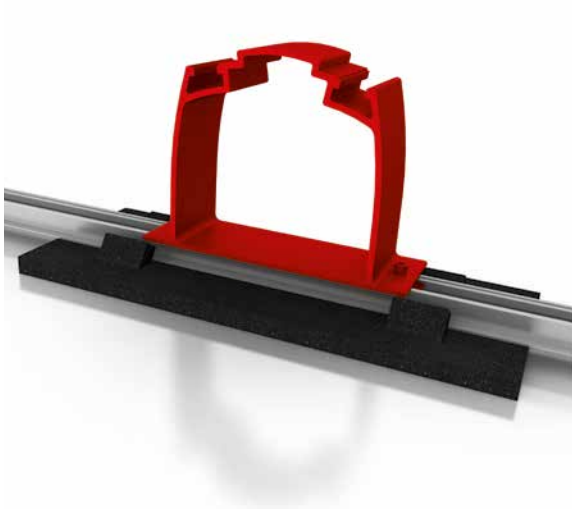

Insert two MK2 slot nuts in the rail and turn 90° clockwise until they lock. Thereafter, position the D-Dome on the rail. Position the protection mat so that two WINGS are under the D-Dome. Only then fasten the D-Dome with two bolts with serrated under head M8×20.

4 Fit Dome SD

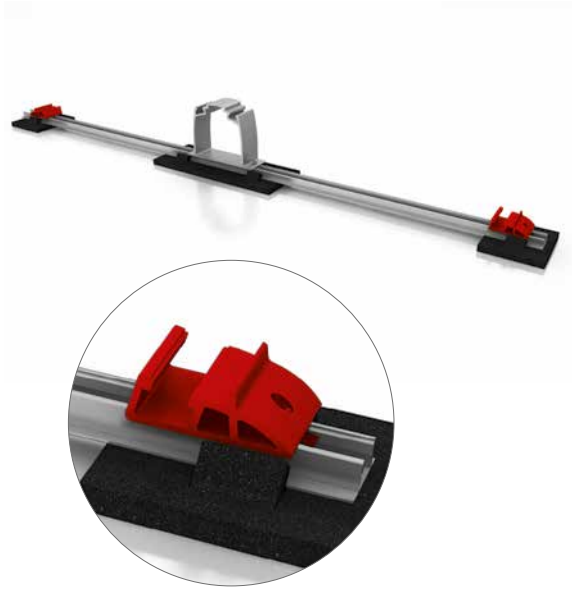

Insert one MK2 slot nut in the rail on each side of the D-Dome and turn 90° clockwise until they lock. Then align two dome SD shown in the adjacent graph. The distance between Dome SD and D-Dome corresponds to about the module width.

Before fastening ensure care should be taken that the protection mat and its WINGS are under the Dome SD and the rails at the array edges do not protrude. Finally the Dome SD is loosely fastened with a bolt with serrated under head.

5 Ballasting the system

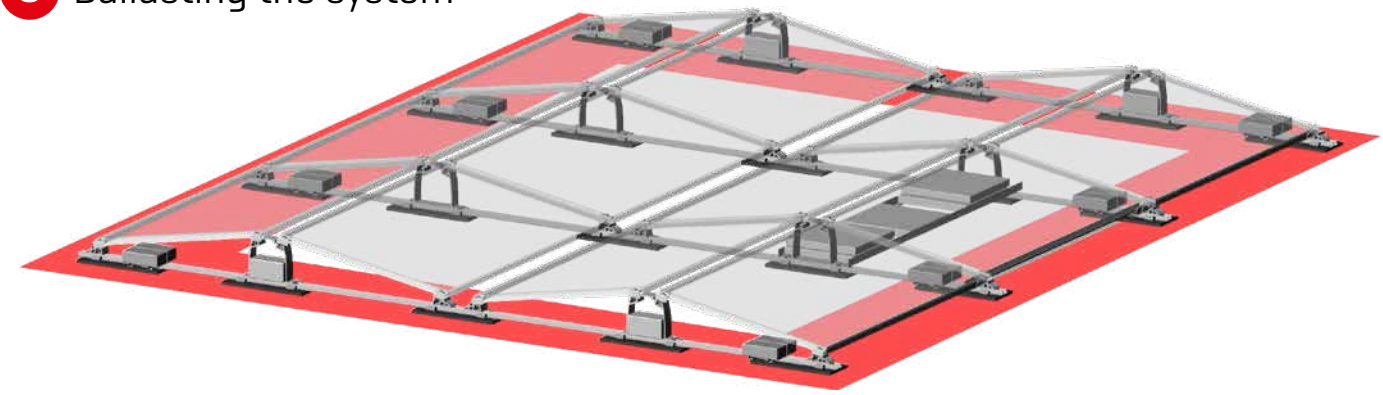

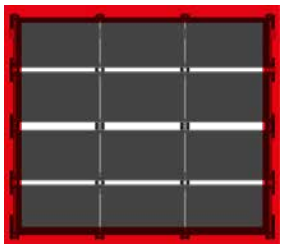

Module array edges

! At the module field edges the specified ballst under the module must be placed as near as possible to the SD Dome.
The correct ballast specifications are calculated automatically by K2 Base and are provided in the ballast plan.

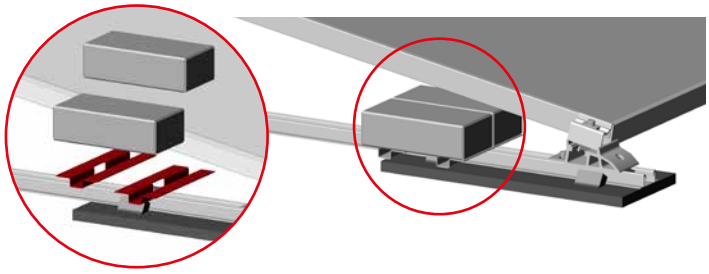

K2 SpeedPorter Installation:

Depending on ballast size, position each SpeedPorter with the appropriate distance and insert the ballast.

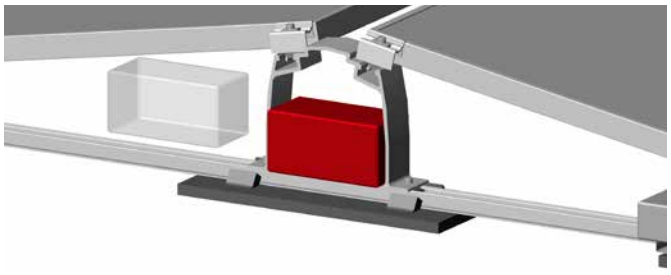

Ballasting without additional items in mid of module field:

If only light ballasting up to 5 kg is required, insert one brick directly into the hollow chamber of the D-Dome.

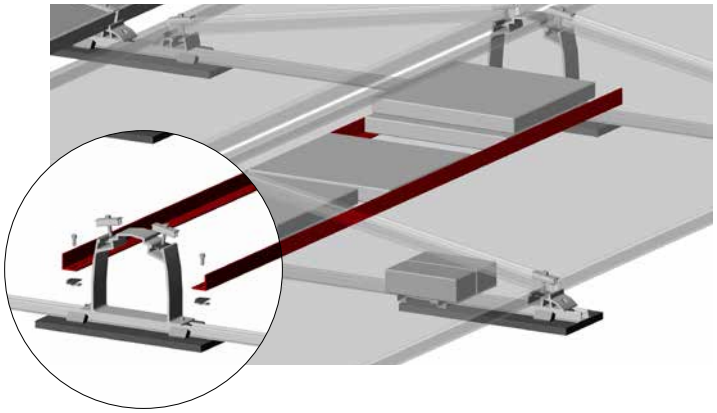

Ballasting with K2 Porter:
The L-Profiles are fastened to the rails with the screws and MK2 slot nut included in the set.
Torque: 16 Nm.
The spacing of the L-Profiles depends on the number of bricks used. The Porters can be positioned both centrally to the D-Dome, or laterally to the middle Dome.
Warning: K2 Porters must be mounted so that all base profiles within a module block are connected.

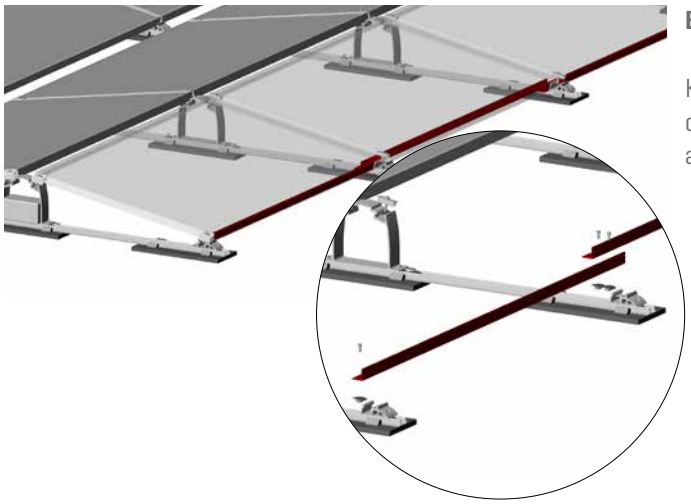

Bracing with Porter

K2 Porters for bracing can be used for ballast reduction in the corner areas. According to the technical design, these must always be positioned on the three outside modules.

Ballast weight table

Ballast weight in kg	Recommended additional items	Recommended brick dimensions in cm	Max. no. of bricks	Installation recommendations
Up to approx. 5 kg	No additional articles required	20 × 10 × 8 20 × 20 × 10 20 × 20 × 6	2 1 2	2 bricks in the cavity of the D-Dome 1 brick in the cavity of the D-Dome 2 bricks in the cavity of the D-Dome
Approx. 5 kg to 40 kg	K2 SpeedPorter Set, one side of the dome	40 × 40 × 4 30 × 30 × 5	2 3	Where necessary, an additional 2 bricks 20×10×8 in D-Dome
Approx. 40 kg to 80 kg	K2 SpeedPorter Set, both sides of the dome	40 × 40 × 4 30 × 30 × 5	2 3	Where necessary, an additional 2 bricks 20×10×8 in D-Dome
AApprox. 80 kg to 100 kg	K2 Porter	40 × 40 × 4 30 × 30 × 5		Where necessary, an additional 2 bricks 20×10×8 in D-Dome

Warning: Pay attention to module inclination when using Porter!

Pay attention to module inclination when using Porter! For ballast weights exceeding 100 kg, please consult a K2 technician. We are happy to assist you with selecting the optimal ballast components once you the ballast size is determined.

Table for bricks and slabs *

Type	Weight in kg	Dim. (L × W × H) in cm
Paving bricks	2,2 3,5 4,5 5,4 7,2	10 × 10 × 10 20 × 10 × 8 20 × 10 × 10 20 × 20 × 6 20 × 20 × 8
Flagstones (slabs)	14 19 22	40 × 40 × 4 40 × 40 × 5 50 × 50 × 4

* Without obligation values

6 Position module and fasten Dome SD

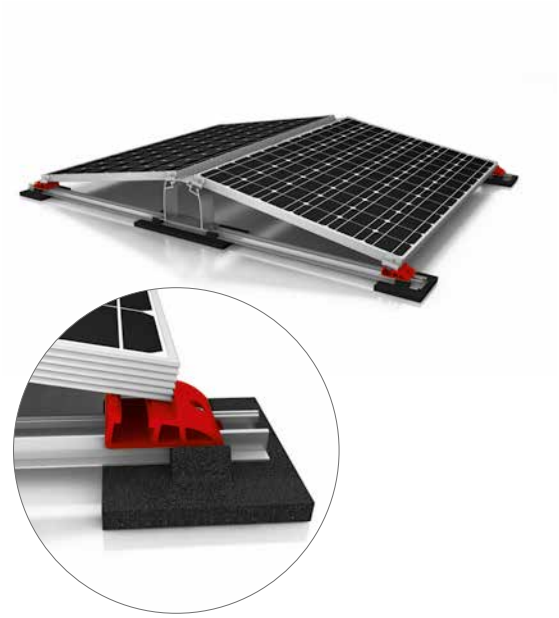

The modules are laid horizontally, in the centre of two D-Domes. The specially affixed bars serve as the stop. Thereafter, the module is positioned on two Dome SDs. The only loosely fastened Dome SD together with the protection mat SD 160x180x18 mm are pushed towards and against the module and then fastened. Before fastening ensure that the WINGS of the protection mat are under the Dome SD and the rails at the array edges do not protrude.
Tightening torque: 16 Nm.

Attention:
Only modules approved for corner clamping may be used, see point „Important mounting instructions“ on page 5. Please take care not to cover any drainage holes in modules, otherwise potential condensation cannot run off.

7 Fasten modules

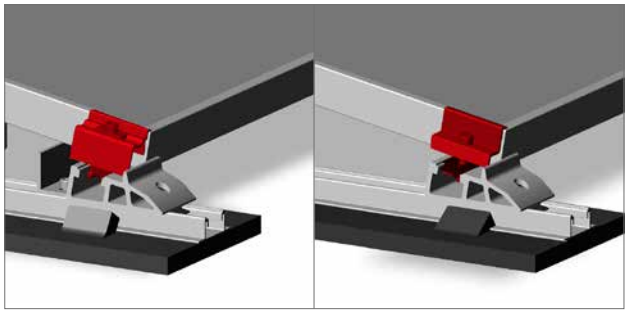

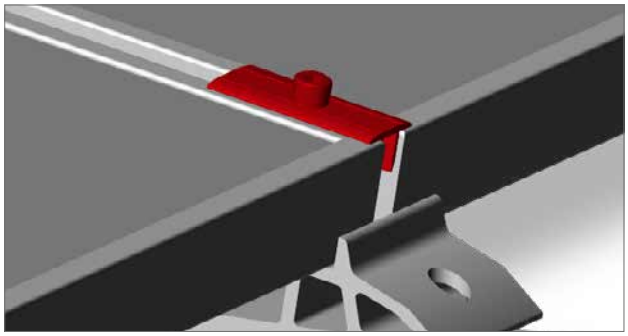

Fix the module in place at the end of a row with universal module end clamp OneEnd. Klick the Stance in the notches. Place clamps on the module frames and fix them. Alternatively, use the standard end clamp sets. Insert the MK2 nut into the slot of the Dome SD and the Dome and turn clockwise by 90 °. Place clamps on the module frames and fix them.

Between every two modules, use two XS middle clamp sets. Insert clamp sets in the Dome and SD notches and rotate 90°. Place the clamps onto the module frame and fix them in place.
Tightening torque: 14 Nm

8 Fix Cable Manager

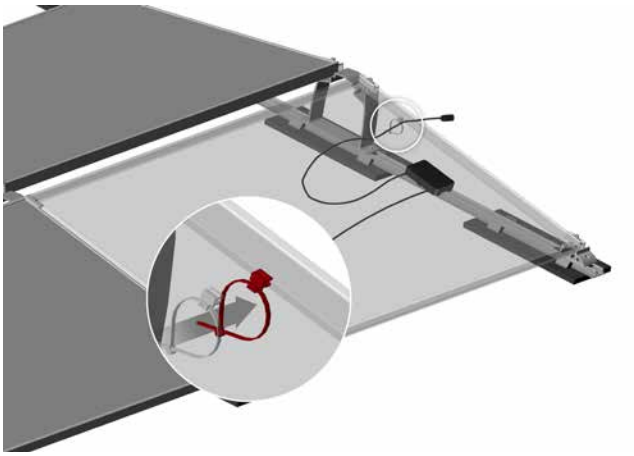

Bend the K2 Solar Cable Manager to a circle and plug it into the module frame backside. Then insert the cables through the cable tie.

Alternative system variant: ¼ clamping unit

1 ... **4** **See page 13 to 16!**

In addtion:

- The K2 D-Dome System is suitable for modules with a frame height of 34 - 50 mm. In general, thin-film modules may not be used with this system. Module length = L_M
- Please observe the permissible clamping range of the modules when laying the rails. See step 5 module length L_M!
- With this mounting variant of the D-Dome system, only the additional clamp sets may be mounted.

Ballast according to step 5 on page 12.

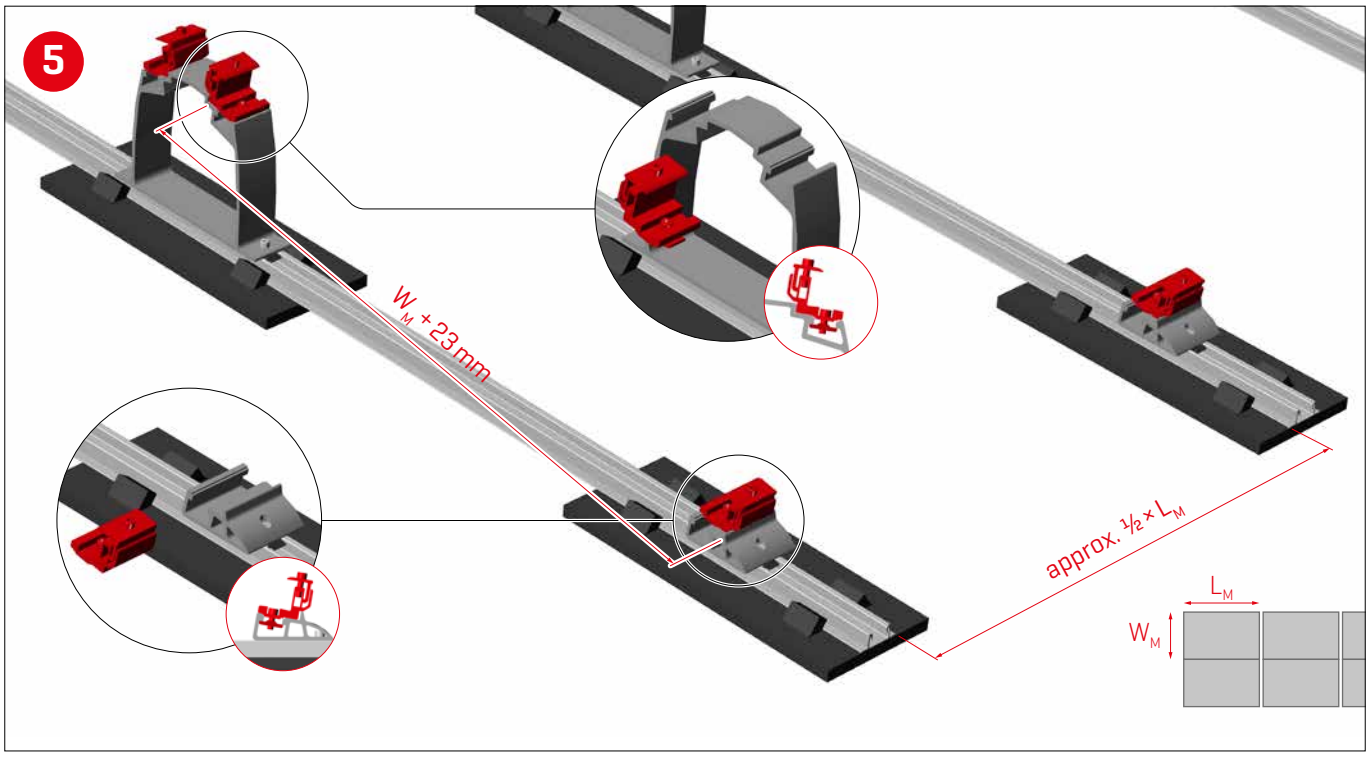

6a

! The K2 Base assembly plan (right) shows in orange where row connections with SingleRail Light are to be placed.

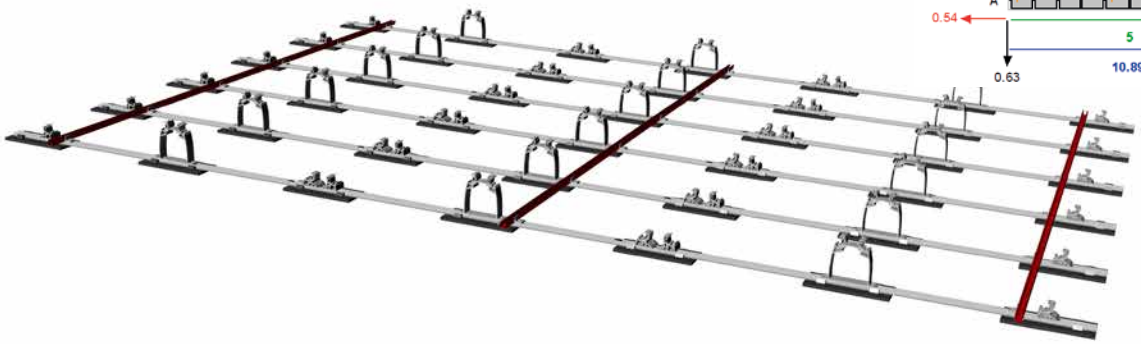

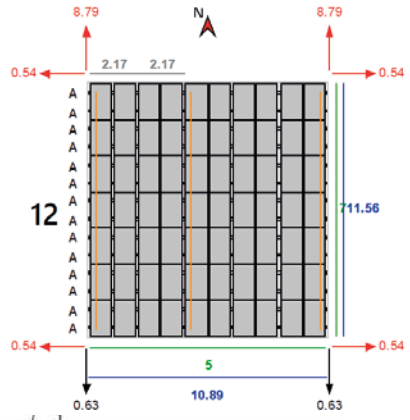

6b

! 16 Nm

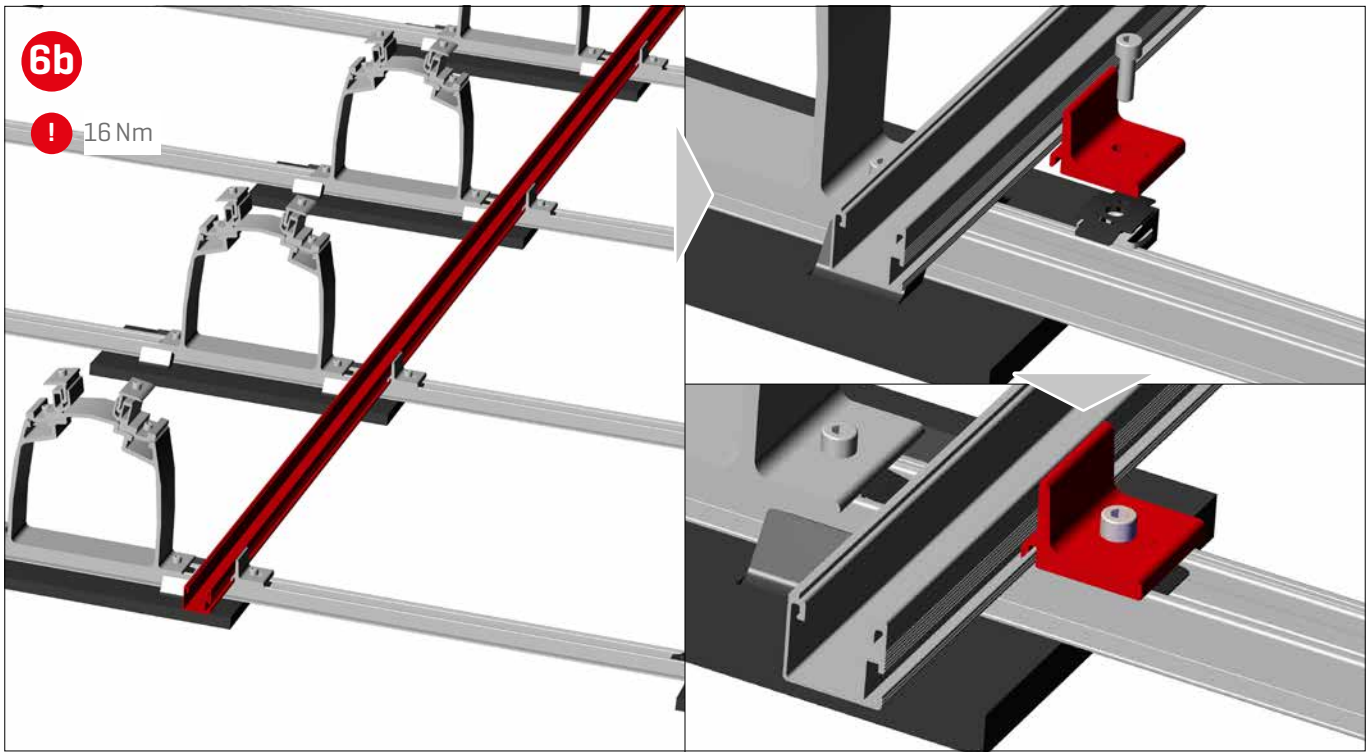

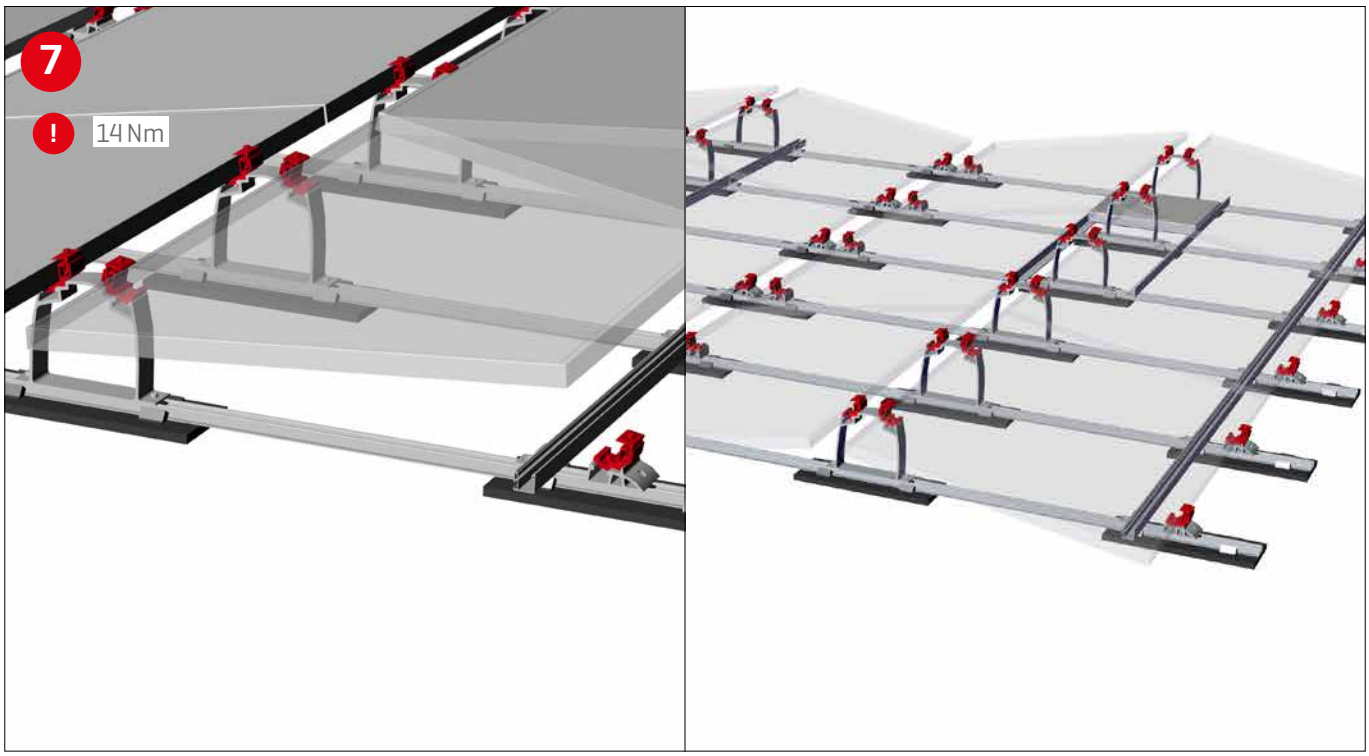
7
!
14 Nm

Notes

We support PV systems

Thank you for choosing a K2 mounting system.

Systems from K2 Systems are quick and easy to install. We hope these instructions have helped. Please contact us with any questions or suggestions for improvement.
Our contact data:

- **k2-systems.com/en/contact**
- **Service Hotline: +49 (0)7159 42059-0**

Our General Terms of Business apply. Please refer:
k2-systems.com

K2 Systems GmbH

Industriestraße 18
71272 Renningen
Germany

+49 (0) 7159 - 42059 - 0
info@k2-systems.com
www.k2-systems.com