We support PV systems

D-Dome 6 System
Classic LS

ASSEMBLY MANUAL

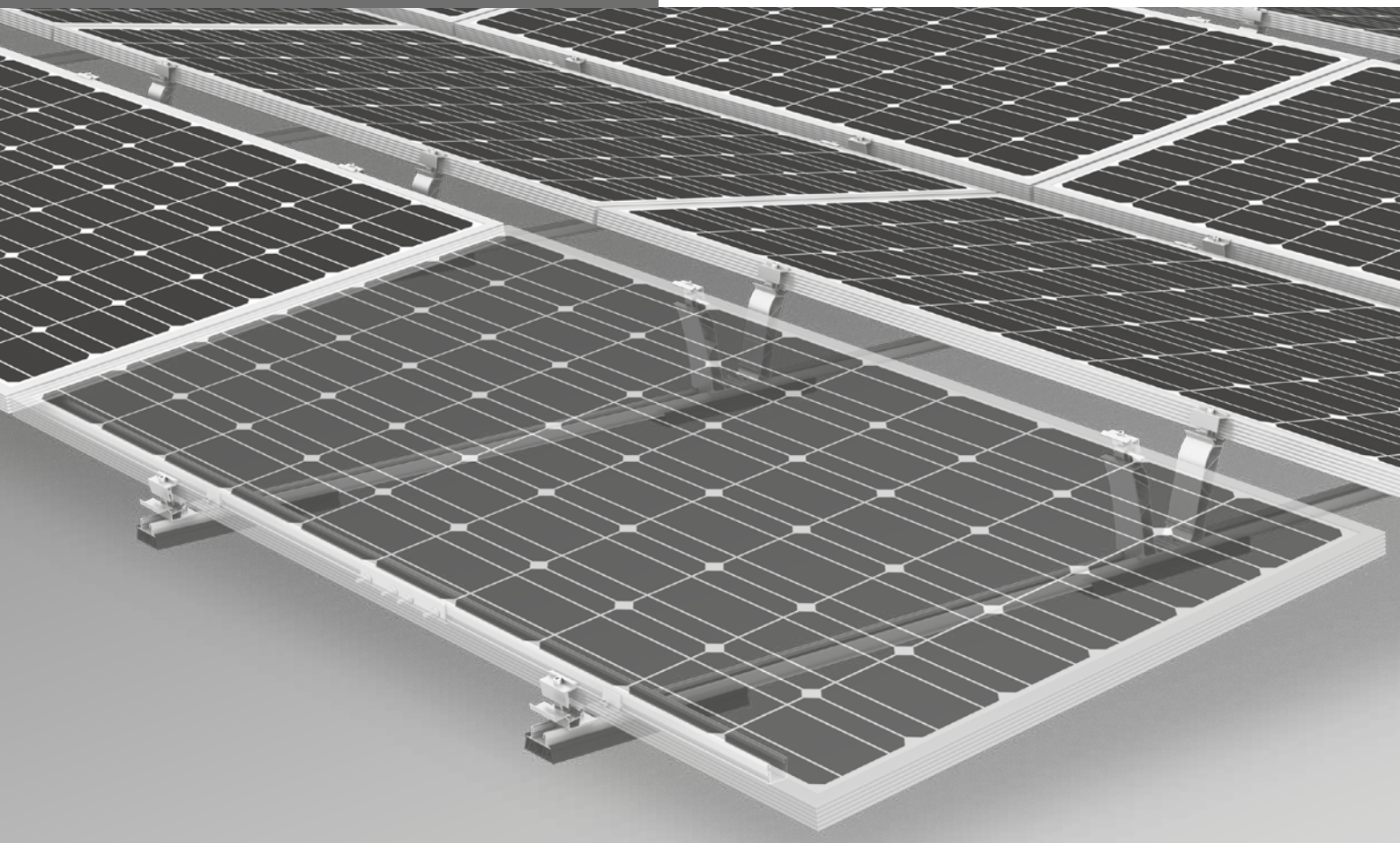

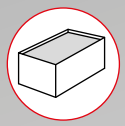



Content

/ Tools overview 3

/ General safety information 4

/ The following guidelines apply 5
- Planning with K2 Base 5
- Roof requirements 5
- Static requirements 5
- Important mounting instructions 5

/ Components 6
- Base components 6
- Ballast 8
- Fixed connection to the roof 9

/ Assembly 10
- Installation of module field and thermal separations 10
- Module assembly 16
- Ballasting options and specifications 18

/ Optional assembly steps 20
- Fixed connection with Dome FixPro using Solmont mounting base 20
- Cable-Manager 21
- Module frame earthing with TerraGrif K2MI 21
- Cable management with PVX MultiMount 22

Quality tested – several certifications

K2 Systems stands for secure connections, highest quality and precision. Our customers and business partners have known that for a long time. Independent institutes have tested, confirmed and certified our capabilities and components.

Please find our quality and product certificates under:
k2-systems.com/en/technical-information

Tools overview

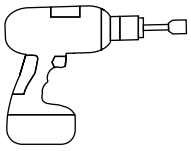

6 mm

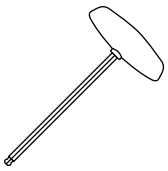

6 mm



6 - 30 Nm
(4.5 - 22.2 lb-ft)

6 mm

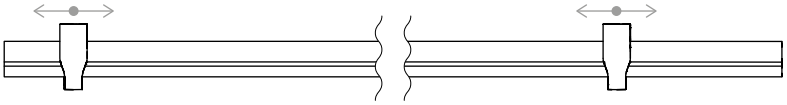

Dome Speed Spacer 2.25 / 2.50 · 2003253 / 2004129
Distance template for module lengths

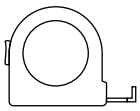

≥ 3.0 m



≥ 6.0 m

Digital Toolbox

DO BA

Do you already know our digital services? Use our K2 DocuCheck App now and record the first important data directly at the customer or project site. Simply transfer the data to our online planning software K2 Base. Here you can plan your project easily, safely and quickly. You receive a detailed project report with assembly plan and static report.
The K2+ interface enables seamless project data transfer to the planning tools of other manufacturers. With the K2 DocuApp, project documentation is done quickly and easily – without annoying paperwork.

Get started and register now:

base.k2-systems.com

docuapp.k2-systems.com

General safety information

Please note that our general mounting instructions must be followed at all times and can be viewed online at k2-systems.com/en/technical-information

- The equipment may only be installed and operated by qualified and adequately trained installers.

- Prior to installation, ensure that the product complies with on-site static loading requirements.
  For roof-mounted systems, the roof load-bearing capacity must always be checked.

- National and local building regulations and environmental requirements must be adhered to.

- Compliance with health and safety regulations, accident prevention guidelines and applicable standards is required.
  - Protective equipment such as safety helmet, boots and gloves must be worn.
  - Roofing works must be in accordance with roofing regulations utilising fall protection safeguards when eaves height exceeds 3 m.
  - At least two people must be present for the duration of the installation work in order to provide rapid assistance in the event of an emergency.

- K2 mounting systems are continuously developed and improved and the installation process may thereby change at any time. Prior to installation consult our website at
  www.k2-systems.com/en/technical-information for up-to-date instructions.
  We can send you the latest version on request.

- The assembly instructions of the module manufacturer must be adhered to.

- Equipotential bonding/grounding/earthing between individual parts is to be performed according to country specific standards, as well as national laws and regulations.

- At least one copy of the assembly instructions should be available on site throughout the duration of the installation.

- Failure to adhere to our general safety and assembly instructions and not using all system components, K2 is not liable for any resulting defects or damages. We do not accept liability for any damage resulting in the use of competitor's parts. Warranty is excluded in such cases.

- German law shall apply excluding the UN Convention on CISG. Place of venue is Stuttgart. Our General Terms of Business apply.

- If all safety instructions are adhered to and the system is correctly installed, there is a product warranty entitlement of 12 years! We strongly recommend reviewing our terms of guarantee, which can be viewed at
  www.k2-systems.com/en/technical-information
  We will also send this information on request.

- Dismantling of the system is performed in reverse order to the assembly.

- K2 stainless steel components are available in different corrosion resistance classes. Each structure or component must be carefully checked for possible corrosion exposure.

The following guidelines apply

The D-Dome 6 Classic LS system can be installed as standard under the following conditions. Even if the system is capable of meeting higher demands through the integration of safety standards, please get in touch with your contact at K2 Systems if the specified values are exceeded.

Planning with K2 Base

We recommend our free online software K2 Base for the planning. In five steps, you can plan the right assembly system and get a construction recommendation, parts list and the structural analysis report. Simply register and start planning:
base.k2-systems.com

Roof requirements

- This system can be installed on all common flat roofs with a pressure-resistant substrate and a roof pitch of ≤ 3° without a fixed connection.
- Fixed connection > 3° to ≤ 10°
  · Up to ≤ 5° combinations with ballast possible
  · > 5° to ≤ 10° only without ballast
- The roof surface must be clean and dry. Roof irregularities must be corrected or removed where appropriate.
- The coefficient of friction of the roof must be determined on-site. See video
  k2-systems.com/en/friction-coefficient

Static requirements

- It is essential to check that the roof structure has sufficient residual load capacity and that the pressure capacity of the roof insulation (where present) is not exceeded.
- Suitable for framed modules with a frame height 30 - 50 mm
- Permissible module dimensions:
  length 1562 - 2390 mm, width 950 - 1170 mm

Important mounting instructions

Mounting system

- The exact mounting angle deviates slightly from 10° depending on the module width. This angle decreases with higher module widths.
- A minimum distance to the roof edge of 600 mm must be maintained. For building heights below 5 m, the minimum distance can be reduced.
- The compatibility of the roof covering and the Mat S support pad must be checked.
- An array must consist of at least two elevations must for this mounting system to be properly utilized.
  · Ensure a thermal separation (distance between module blocks) in the direction of the base rail and module rows must be maintained:
  · Base rail: 12.3 m
  · Module row: 16.0 m
- In the event of exceptional circumstances (such as storms, heavy rain, earthquakes, etc.), the system should be checked by a specialist. Should an inspection find damage or plastic deformation (such as in the module clamp area) the components must be replaced.

Modules and clamping

- Tightening torque of 14 Nm for all module clamps.
- Adhere to module manufacturer recommendations for clamping area and module installation (see module manufacturer instructions). Check whether manufacturer approval is available for clamping on the short module side. See
  k2-systems.com/en/approved-modules-dome-6

General information

- External influences that act on this system are only reflected in the design of the ballast to a limited degree. For instance, unevenness, thermal elongation, moss, water accumulation and ageing of the sheeting cannot be considered, although these factors might also precipitate system displacement under certain circumstances. We therefore recommend regular maintenance of the system or to check whether additional mechanical fastening is necessary.
- It is important to ensure that the rain water flow is not hindered.
- Because of the different orientation of the solar modules, the string and inverter connection must be appropriately observed. It is recommended that the inverters and strings are connected separately.
- On-site general standards and regulations for lightning protection must be observed and consultation with a specialist to create a lightning protection concept is recommended (use lightning protection clamp if necessary).

Components

Base components

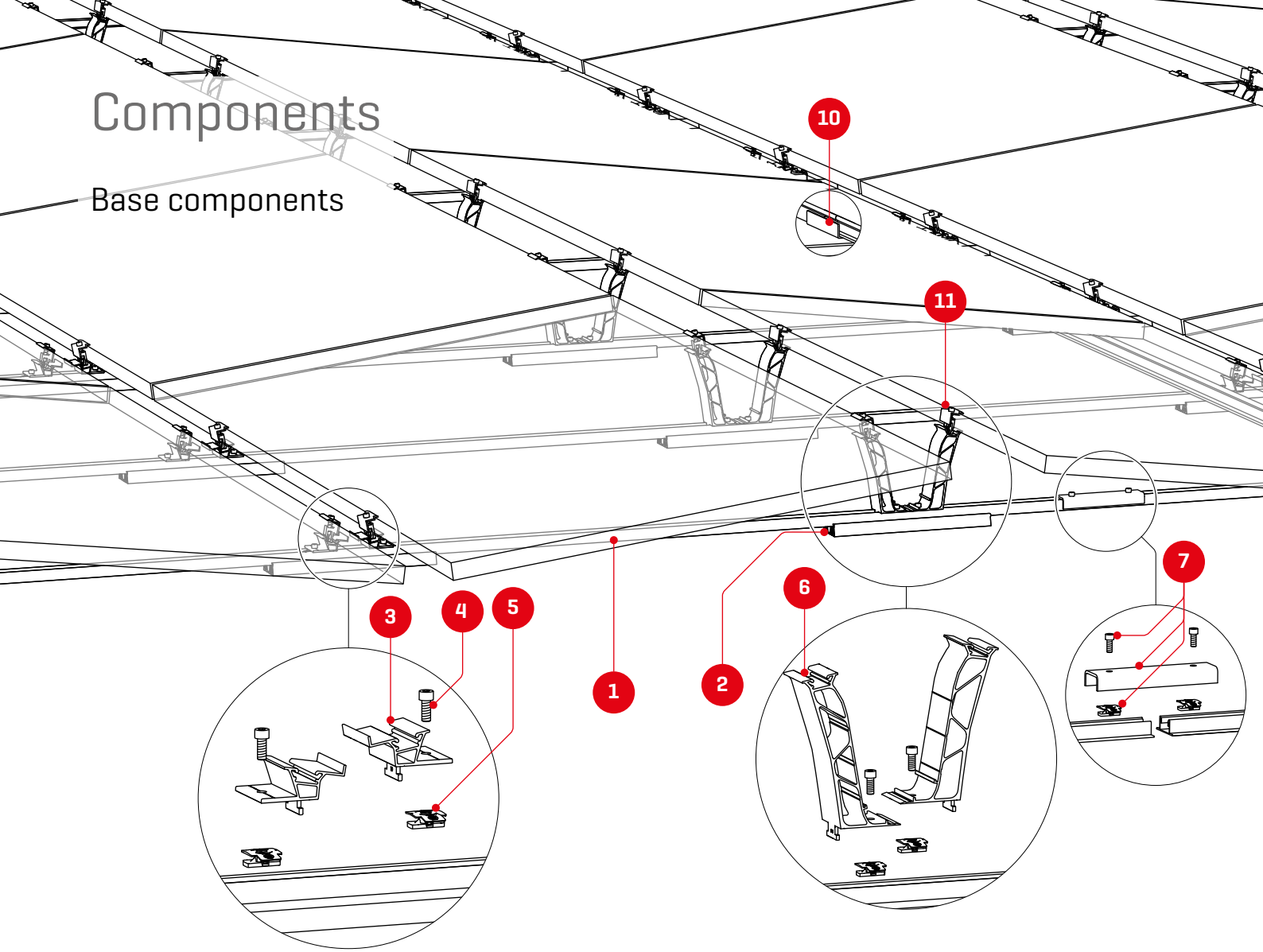

1 Article number system-specific
BasicRail 22



2 2003126
Mat S



3 2003243
Dome 6.10 SD



4 1001643 + 2001729
5 **MK2 Slot nut with clip + Allen bolt M8×20**



6 2004125
Dome 6.10 Peak

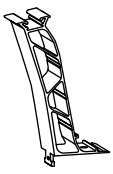

7 1006039
FlatConnector Set



8 2003145
Climber Set



9 2003258
SingleRail Light 36

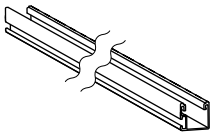

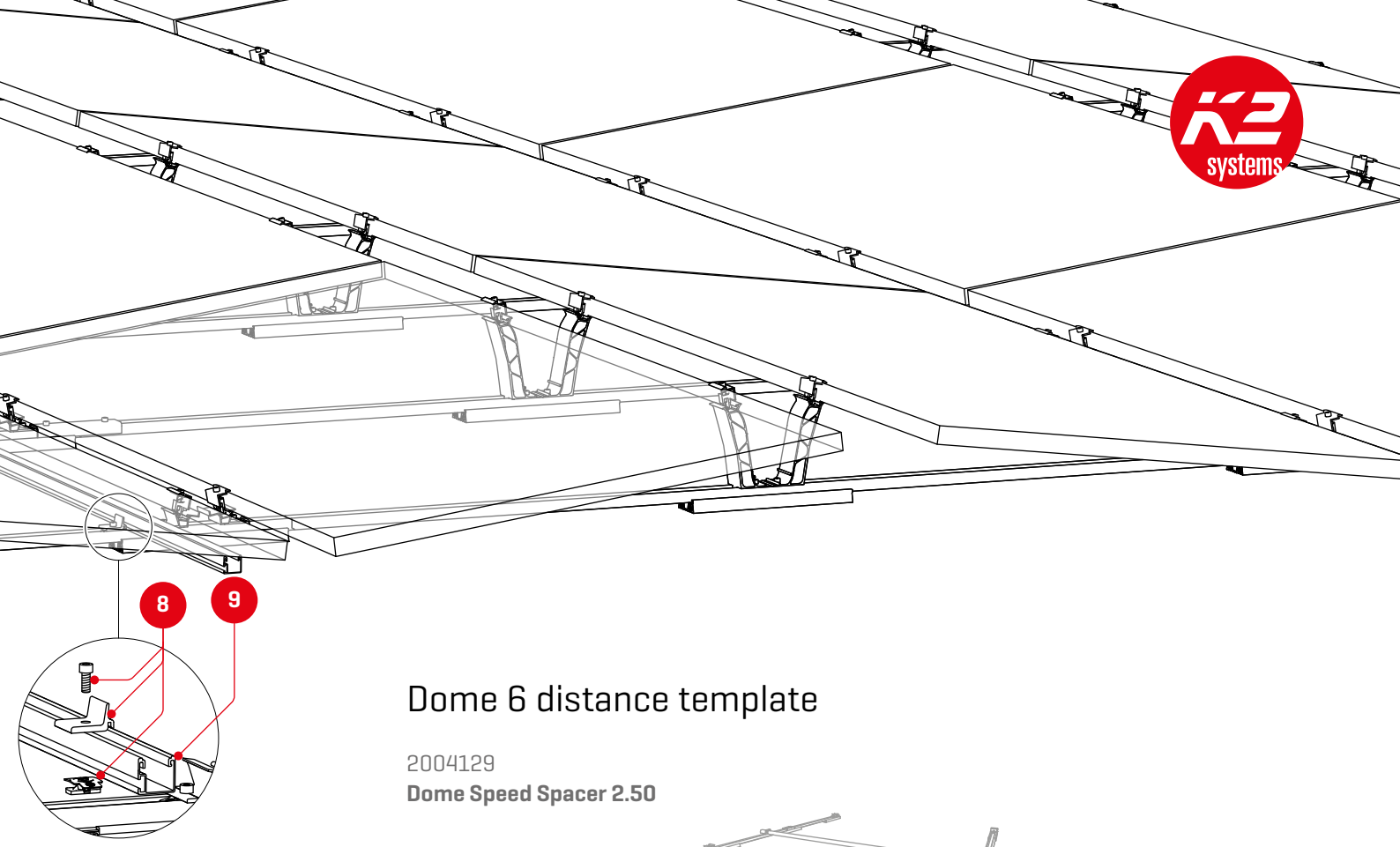

Dome 6 distance template

2004129
Dome Speed Spacer 2.50

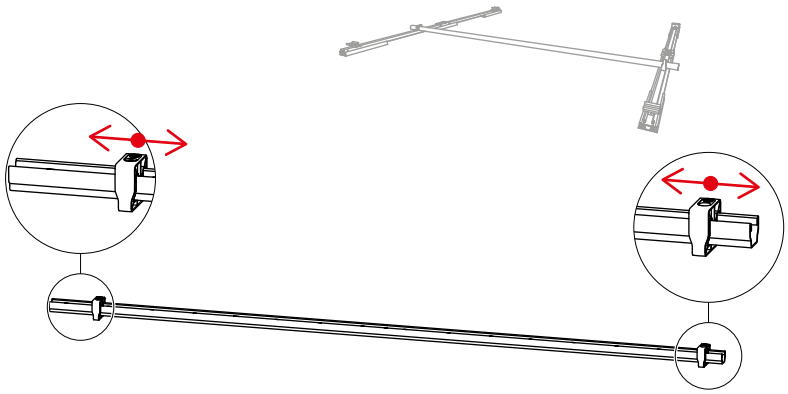

Optional

10 2001976
SingleRail 36 Connector Set

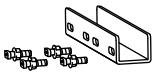

2002870
Cable-Manager

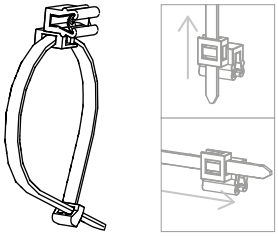

2003542
TerraGrif K2MI Duo 18



2004141
Mat S Tool

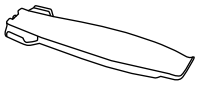

11 2002559
DomeClamp EC



2004054 + 2003137
Performa Mesh Tray and PVX Multimount

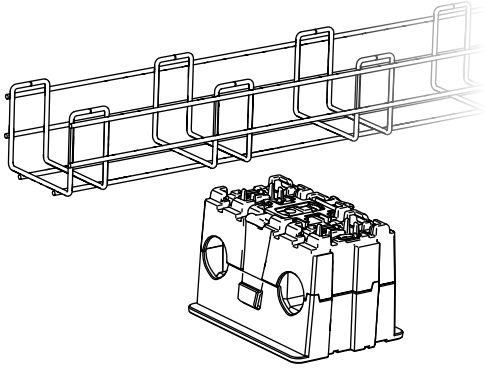

Components

Ballast

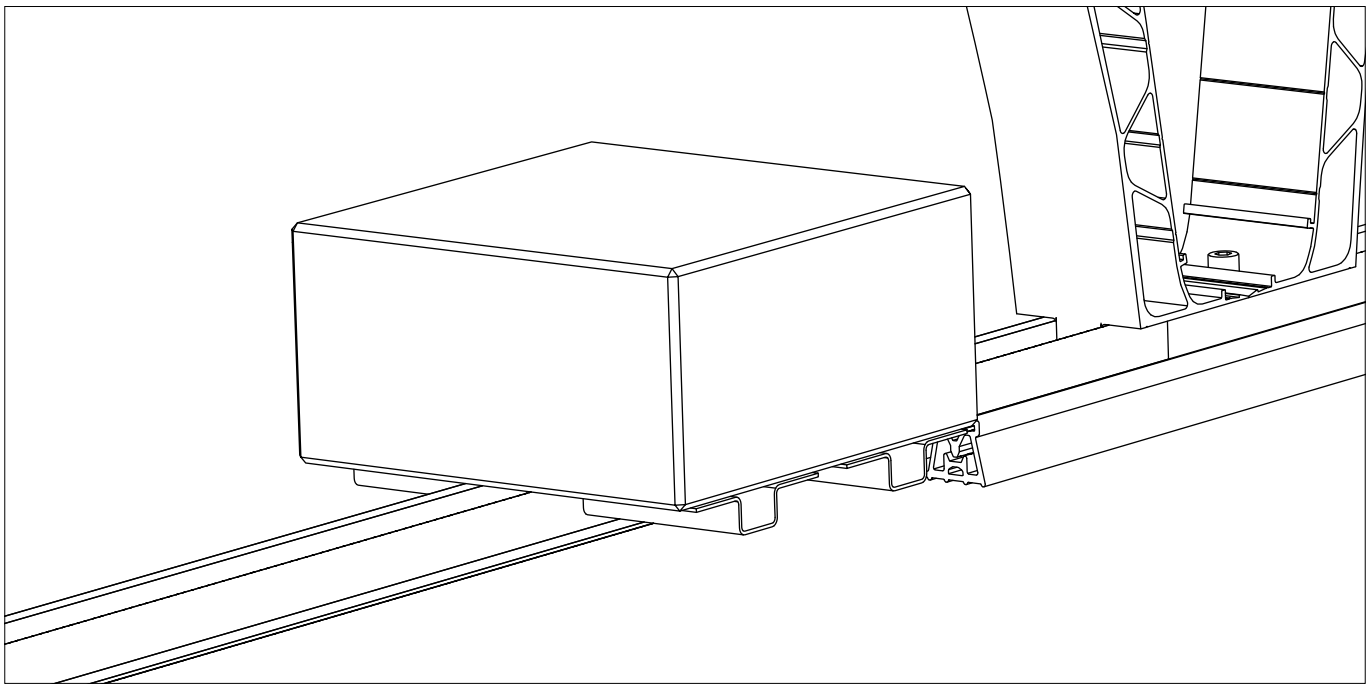

2002300
SpeedPorter

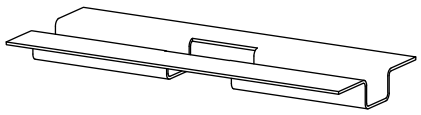

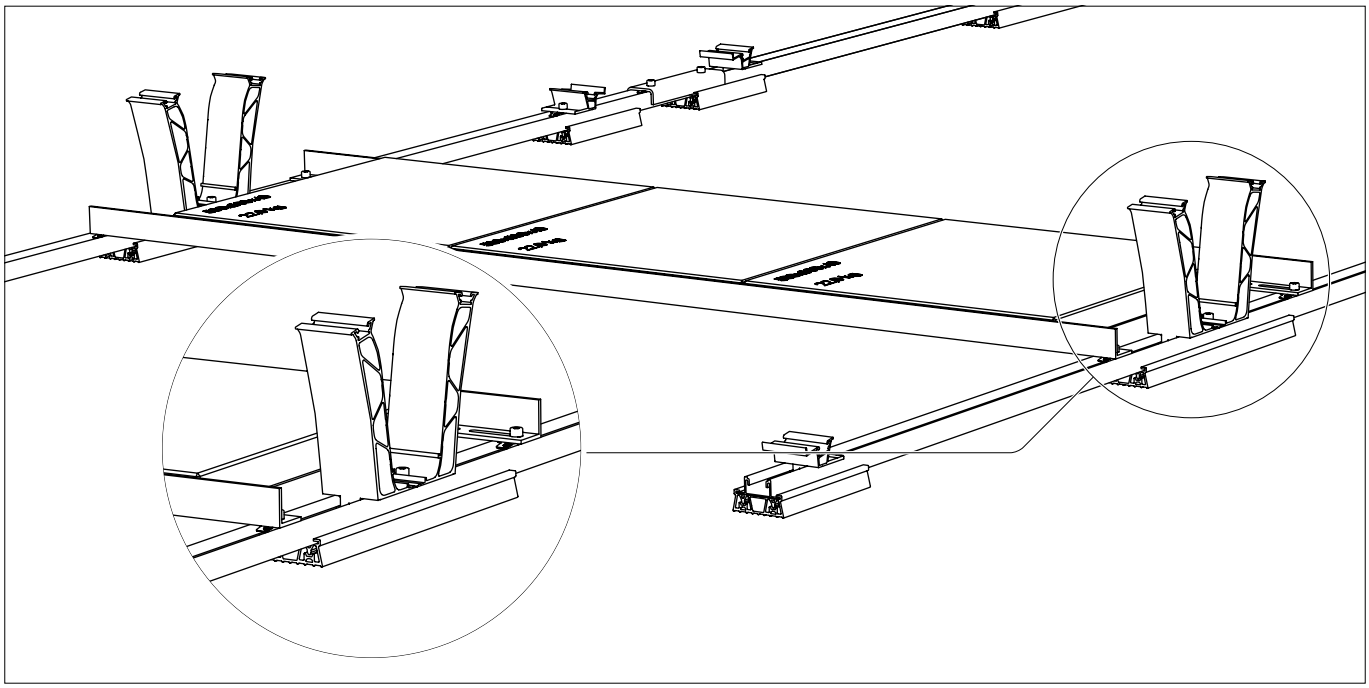

2004157
Porter Flex

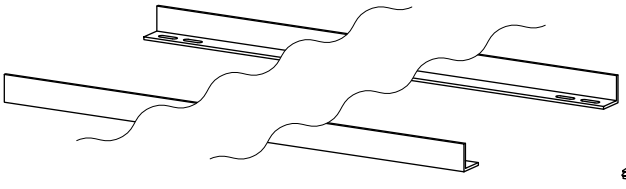

1001643 + 2001729
MK2 Slot nut with clip + Allen bolt M8×20



Fixed connection to the roof

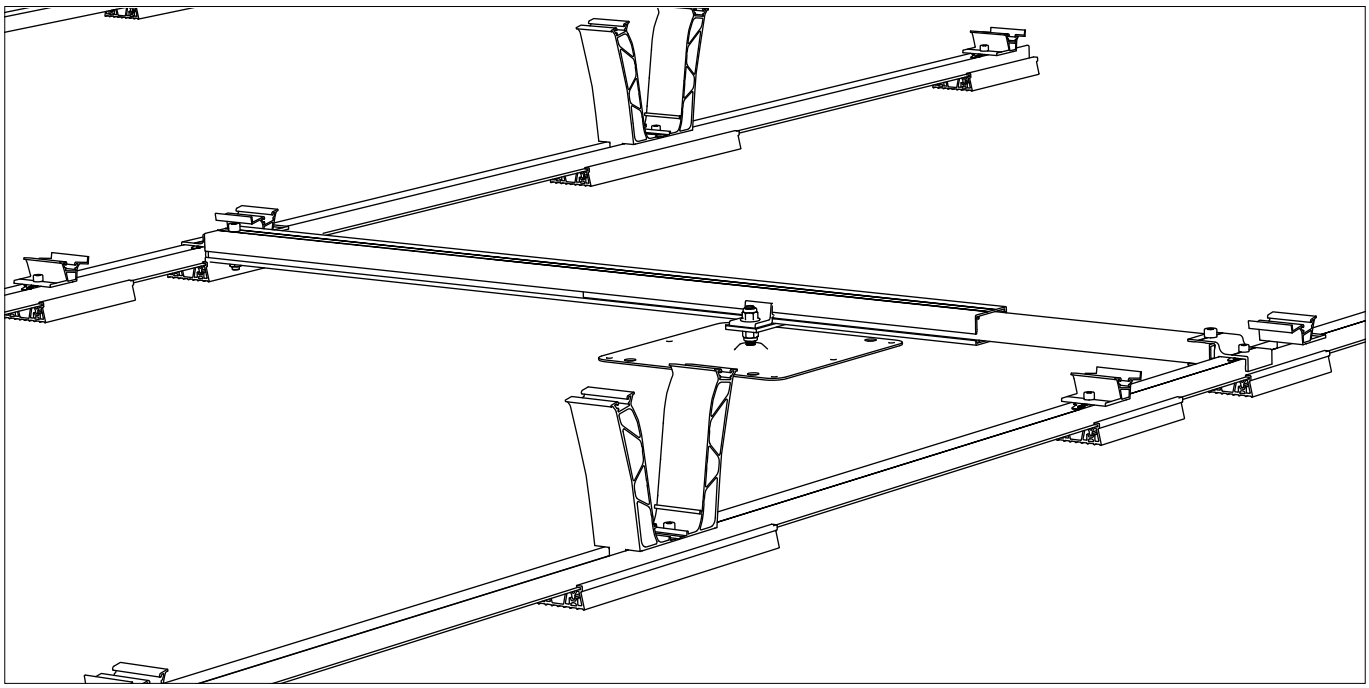

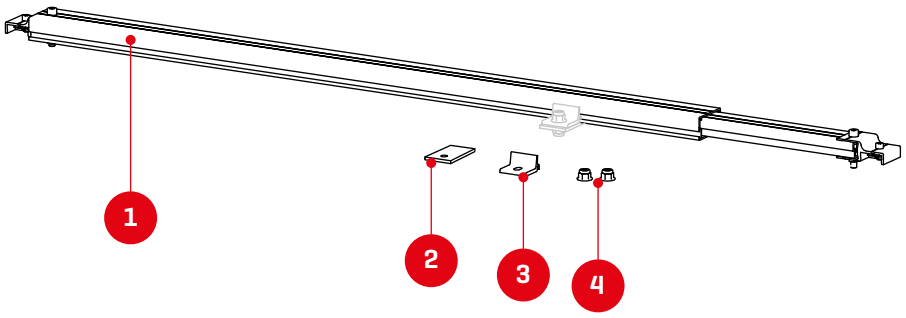

1. 2003384
   Dome FixPro S
2. 2002546 / 2002547
   Adapter plate M10/12
3. 2003146 / 2003147
   Climber M10/12
4. Other fastening elements (e.g. screws and nuts) for fixing to the fastener must be provided by the customer.

Assembly

Installation of module field and thermal separations

The minimum assembly values [S_{X1}/S_{Y1}] for the thermal separations of module blocks must not be undercut.
In K2 Base, you set the distances between the module edges[S_{X2}/S_{Y2}] for planning. The K2 Base mounting plan outputs the automatically calculated mounting values depending on S_{X2}/S_{Y2}.

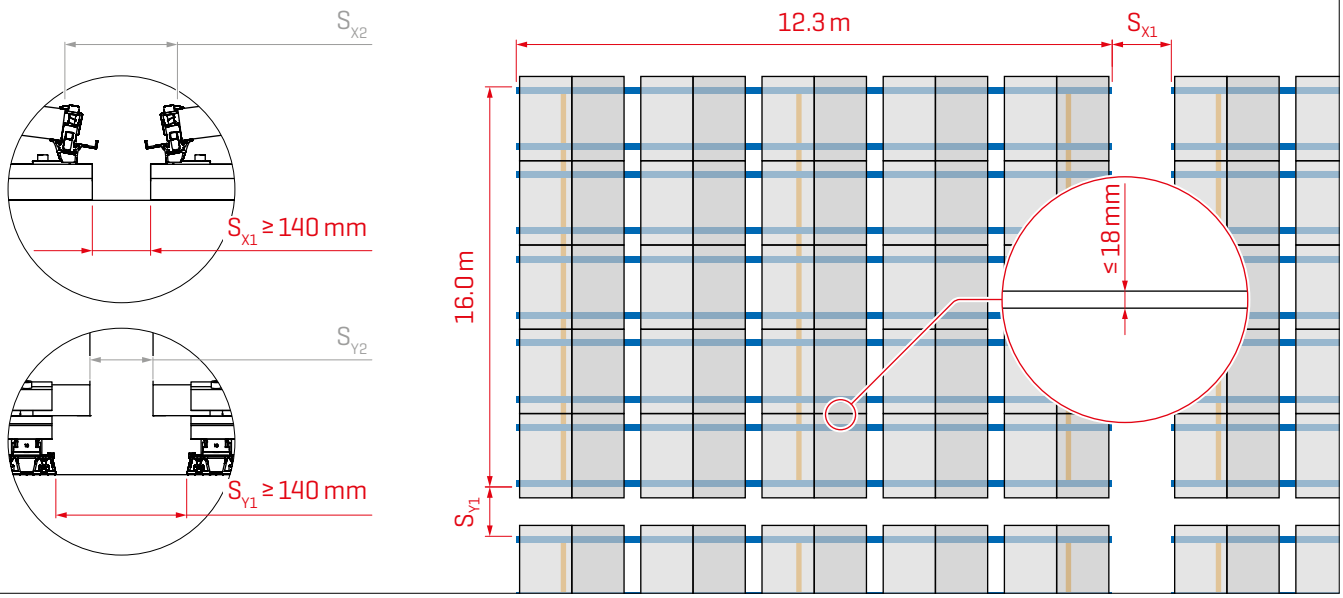

1

To measure the distances between mounting rails, set Dome SpeedSpacer to the distance D_R.

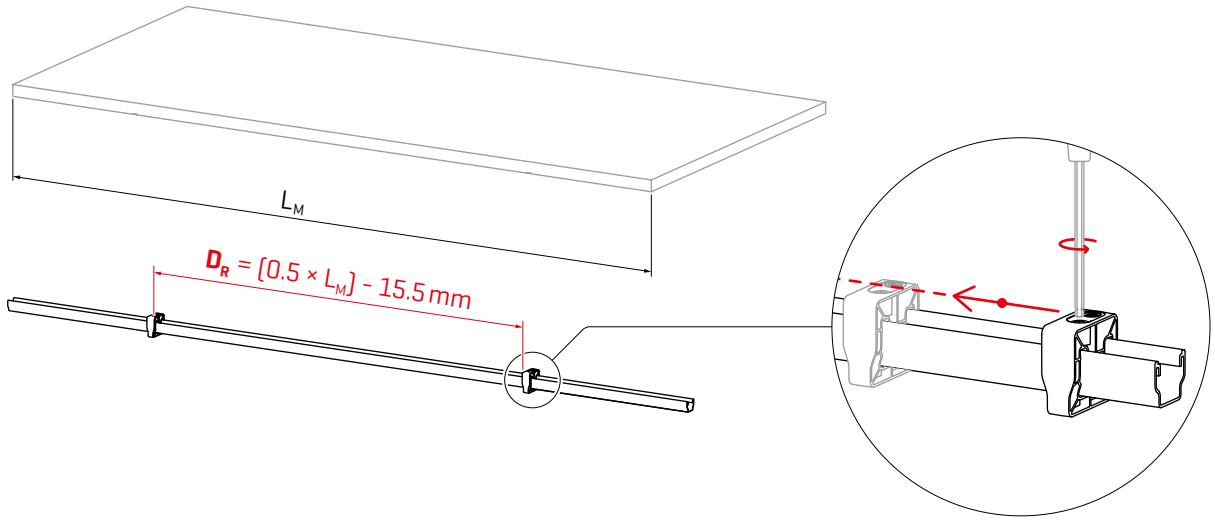

2

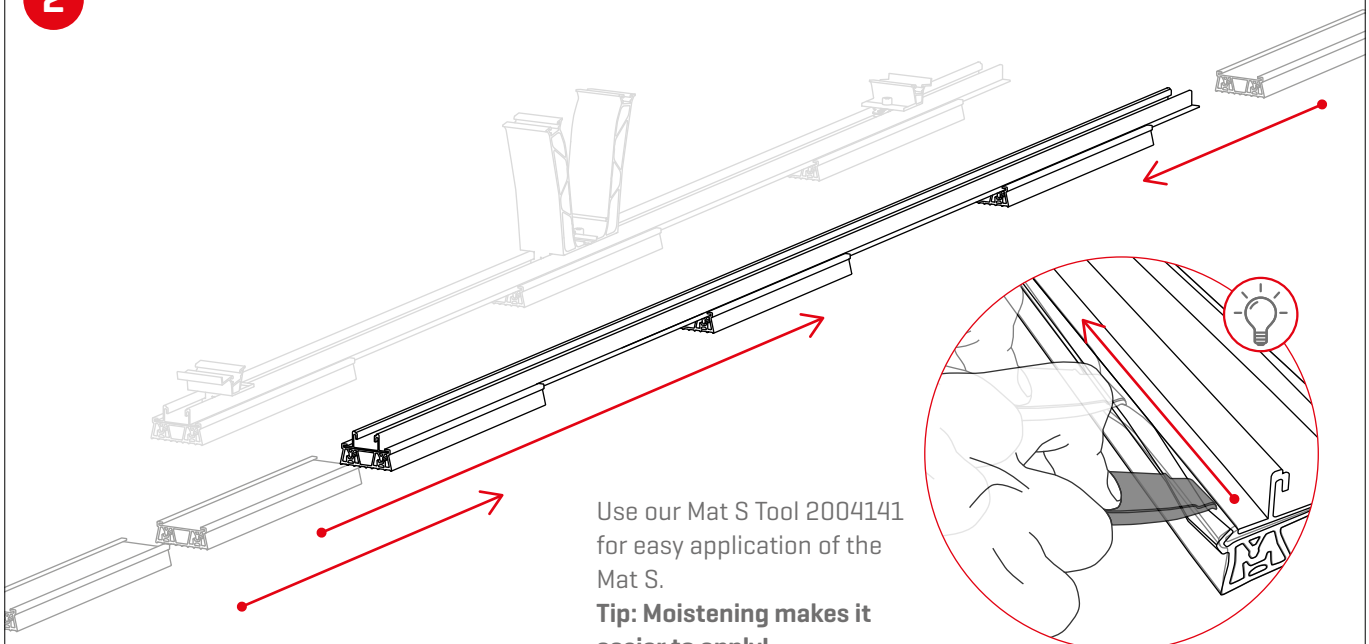

Use our Mat S Tool 2004141 for easy application of the Mat S.
Tip: Moistening makes it easier to apply!

3

! 14 Nm

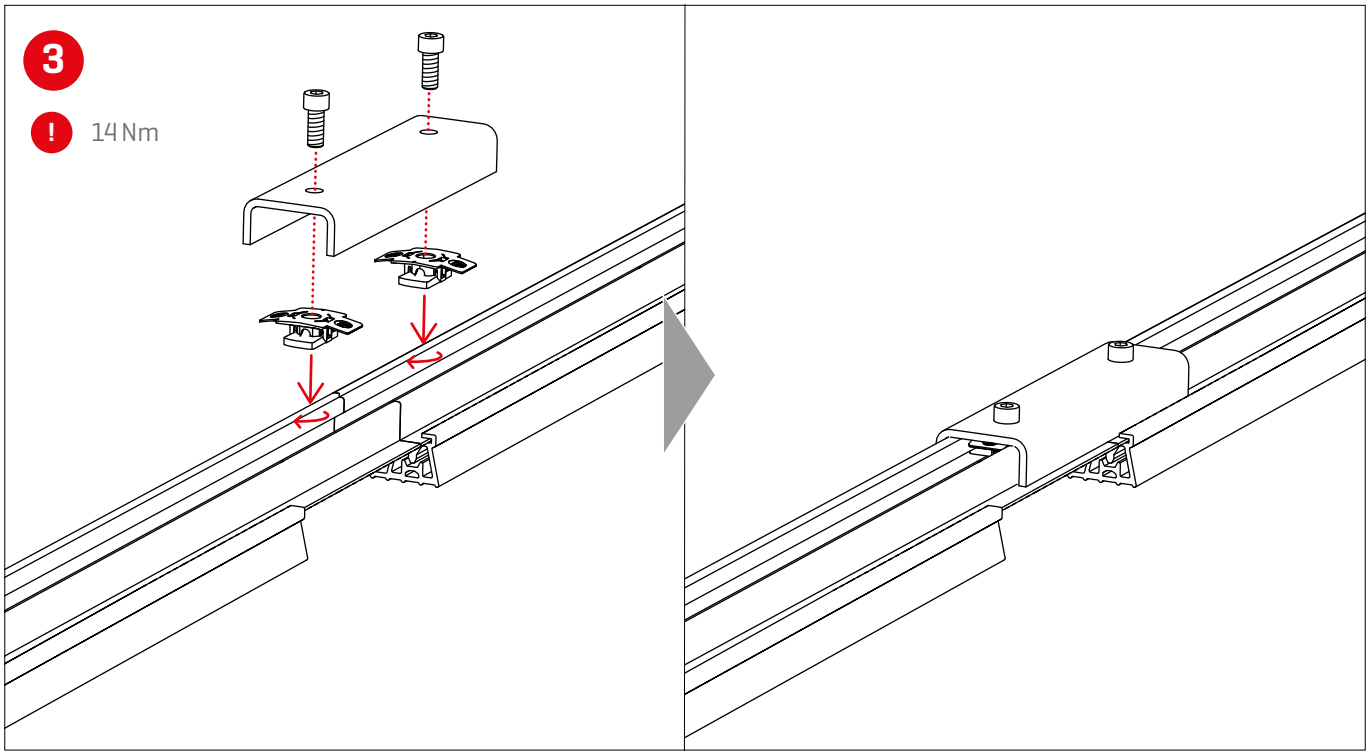

4

Place the rail types according to the Base installation plan.

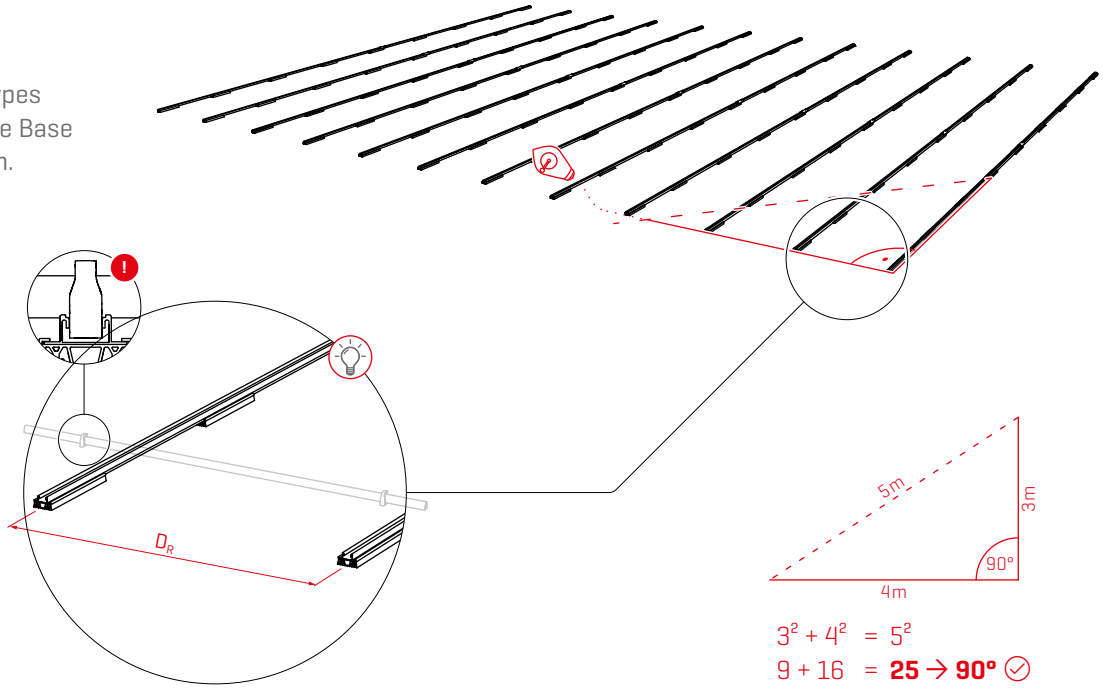

5

K2 Base automatically calculates the pre-assembly dimensions M_1 / M_2 and outputs them in the assembly plan. These must be adhered to during assembly.

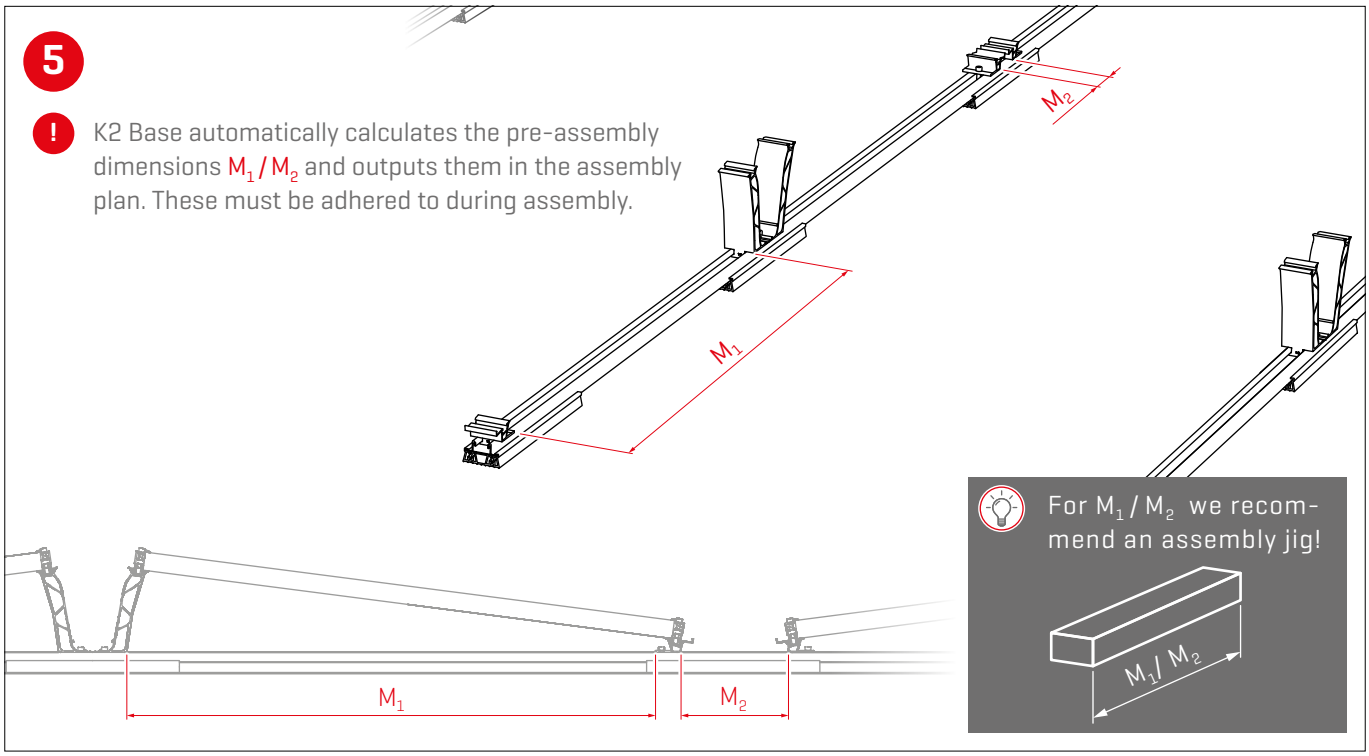

6a

! 14 Nm

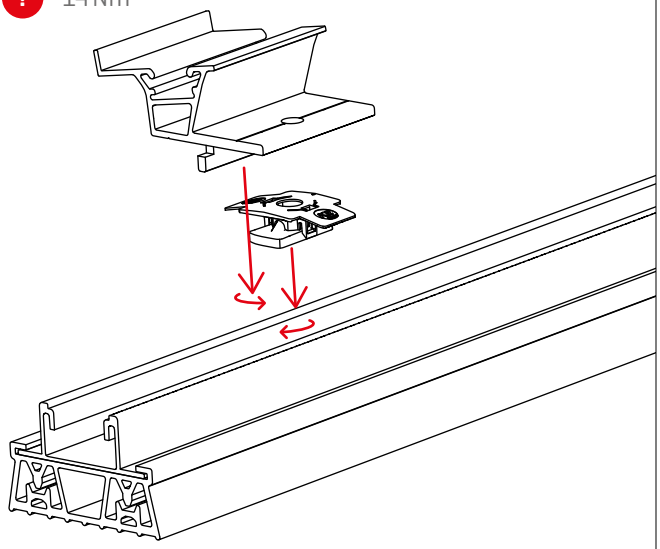

! 14 Nm

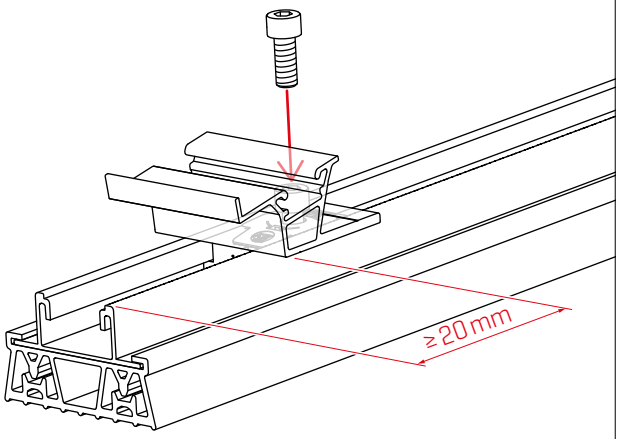

6b

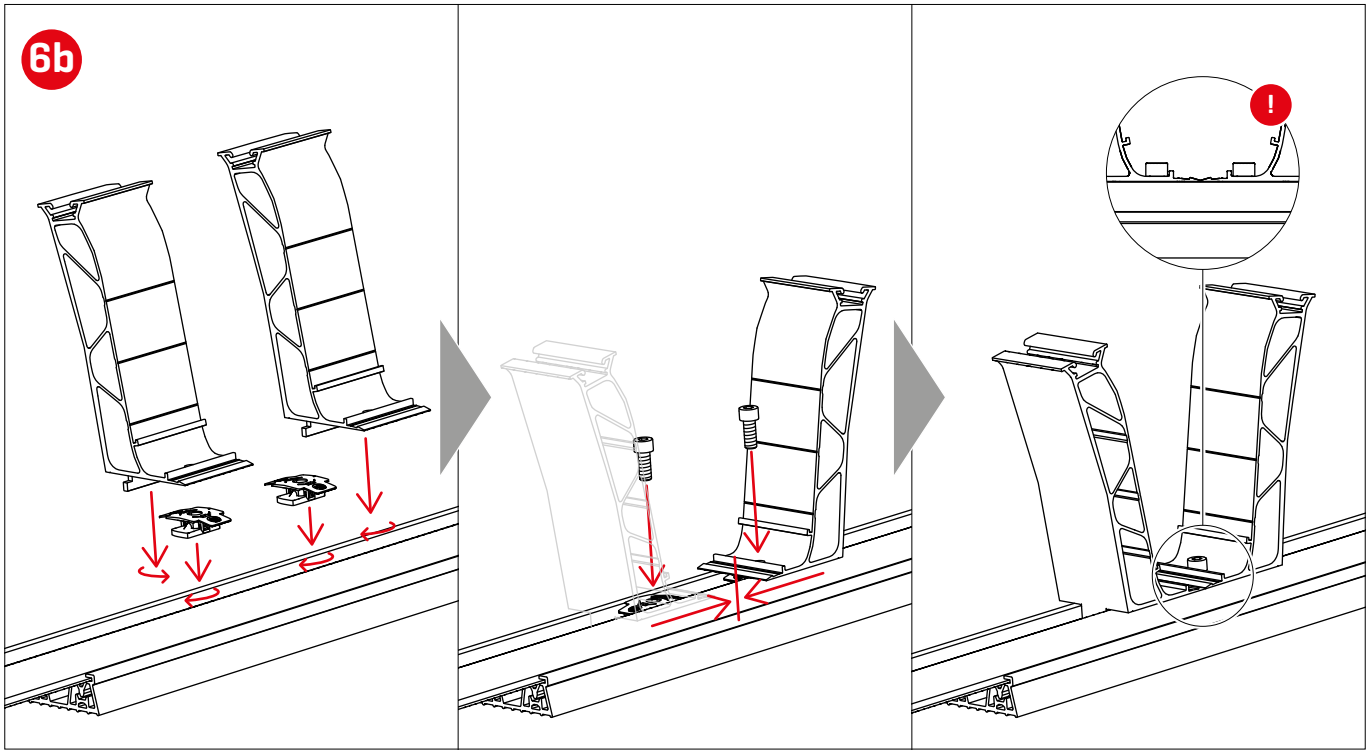

7a

! The K2 Base assembly plan (right) shows in orange where row connections with SingleRail Light are to be placed.

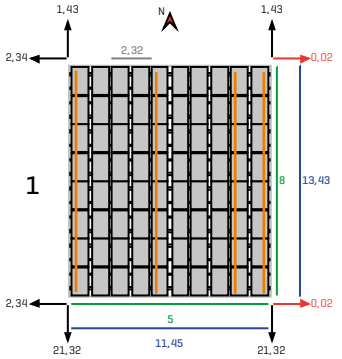

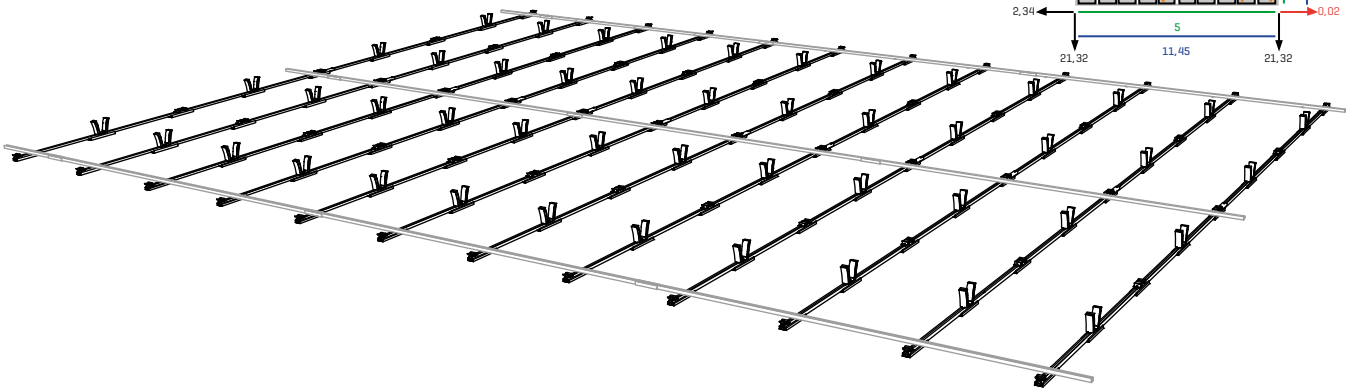

7b

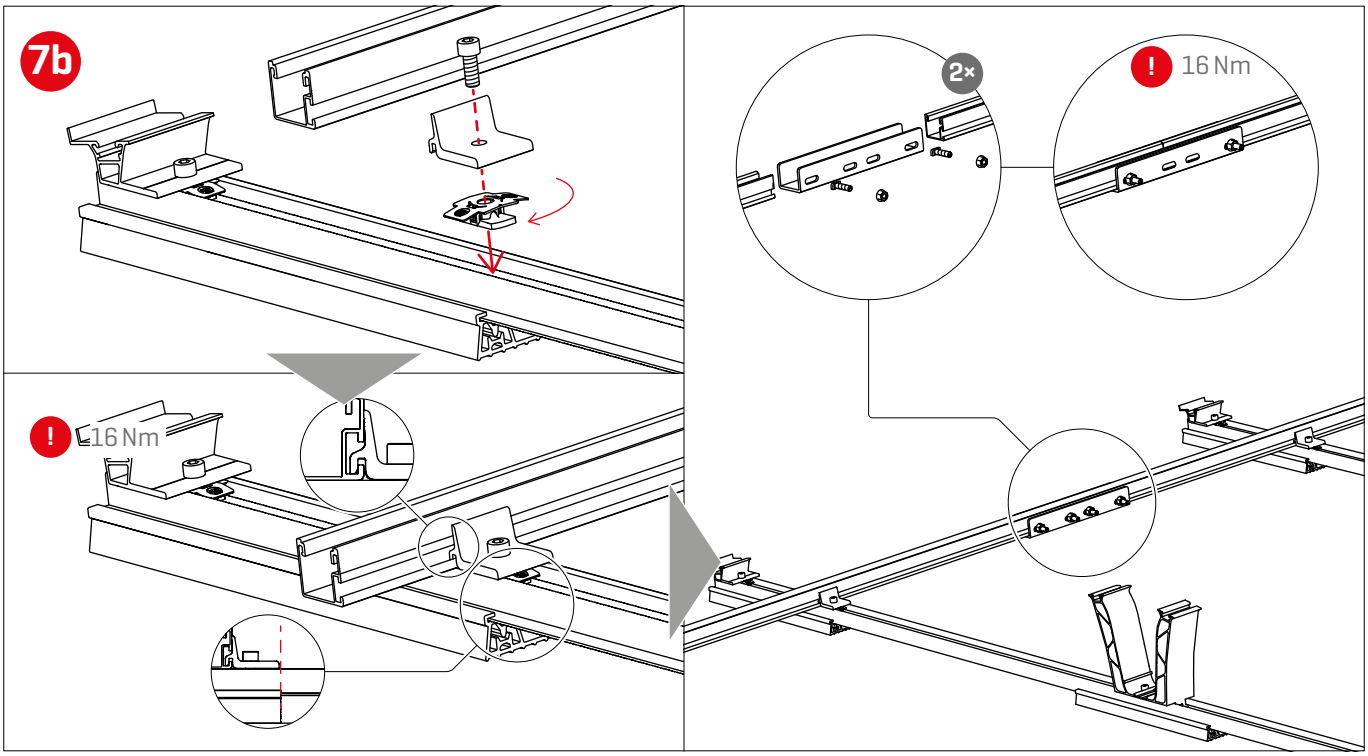

8

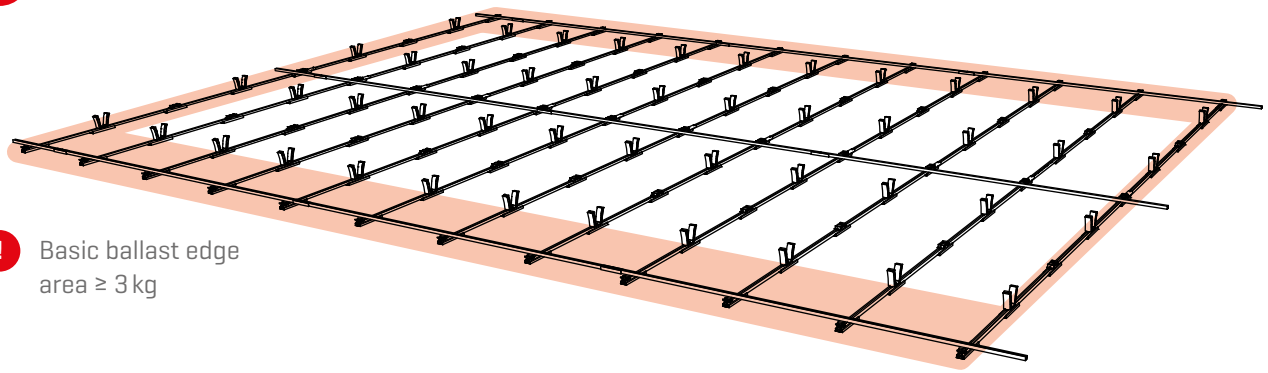

! Basic ballast edge area ≥ 3 kg

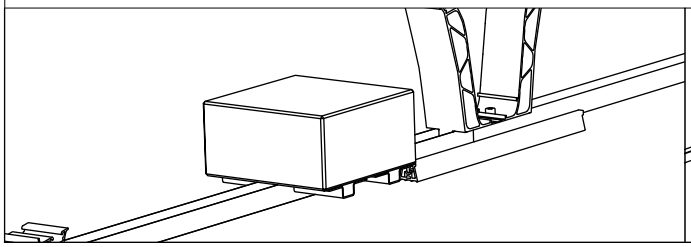

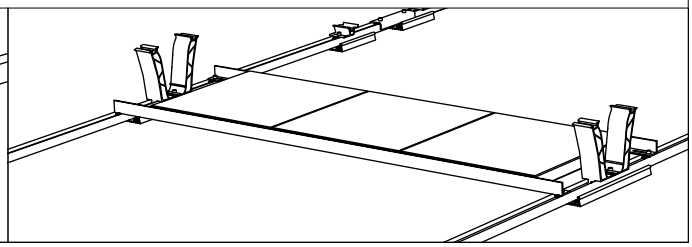

Module assembly

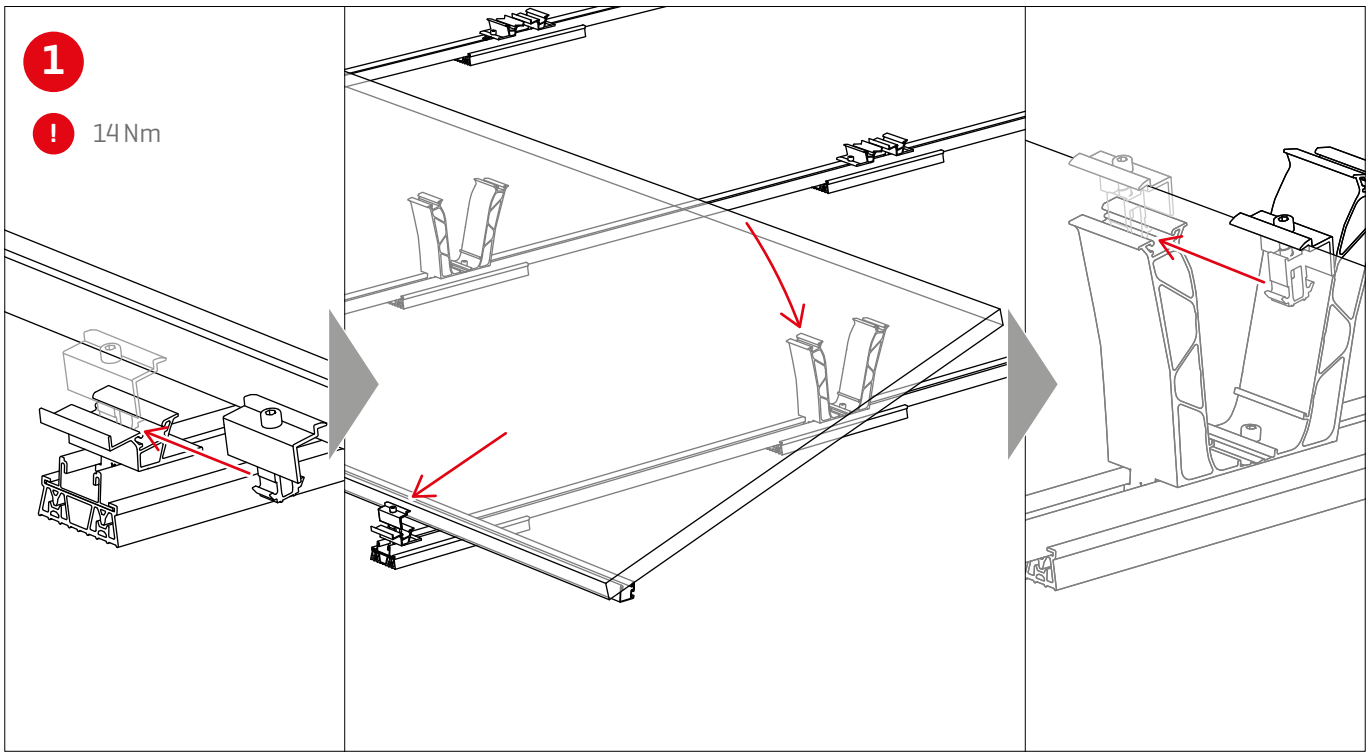

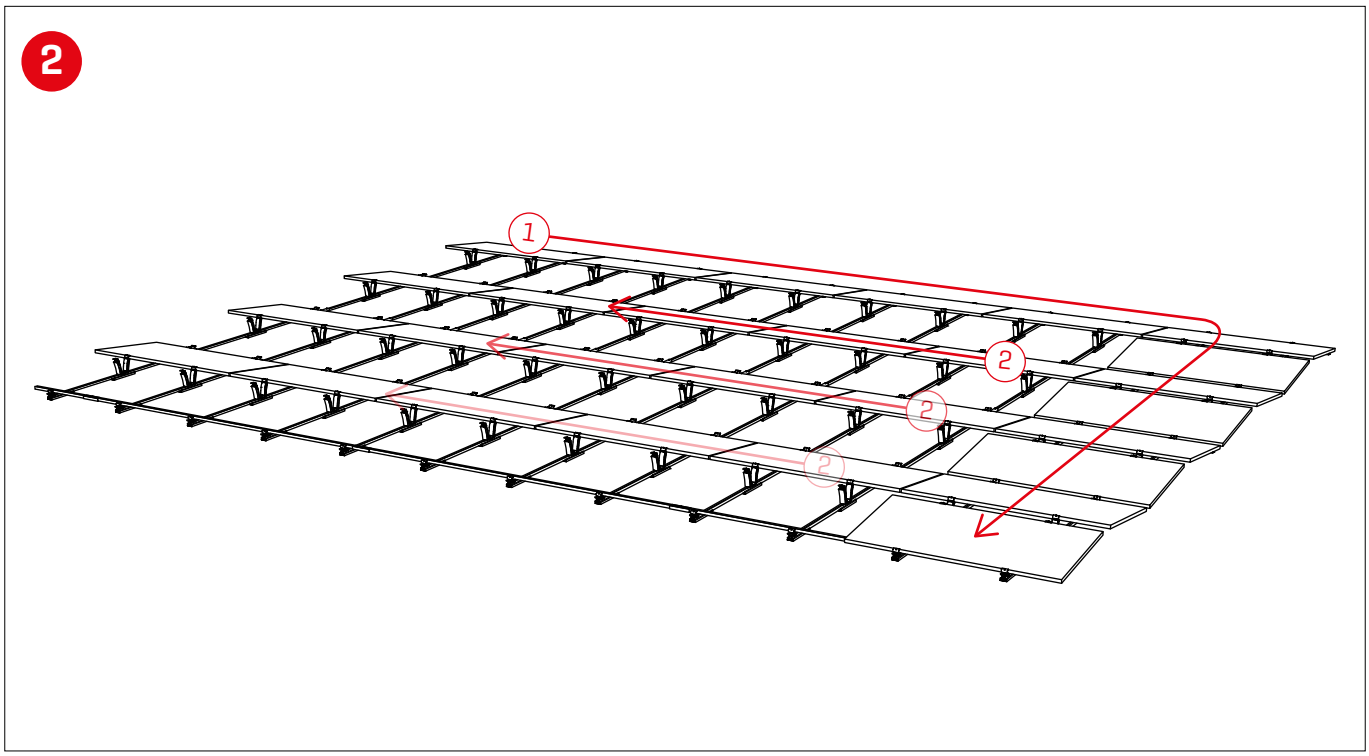

3

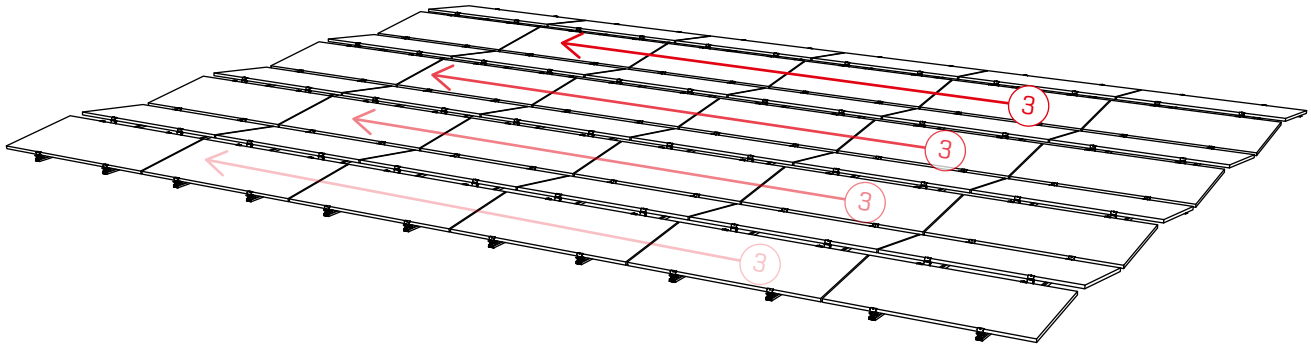

Ballasting options and specifications

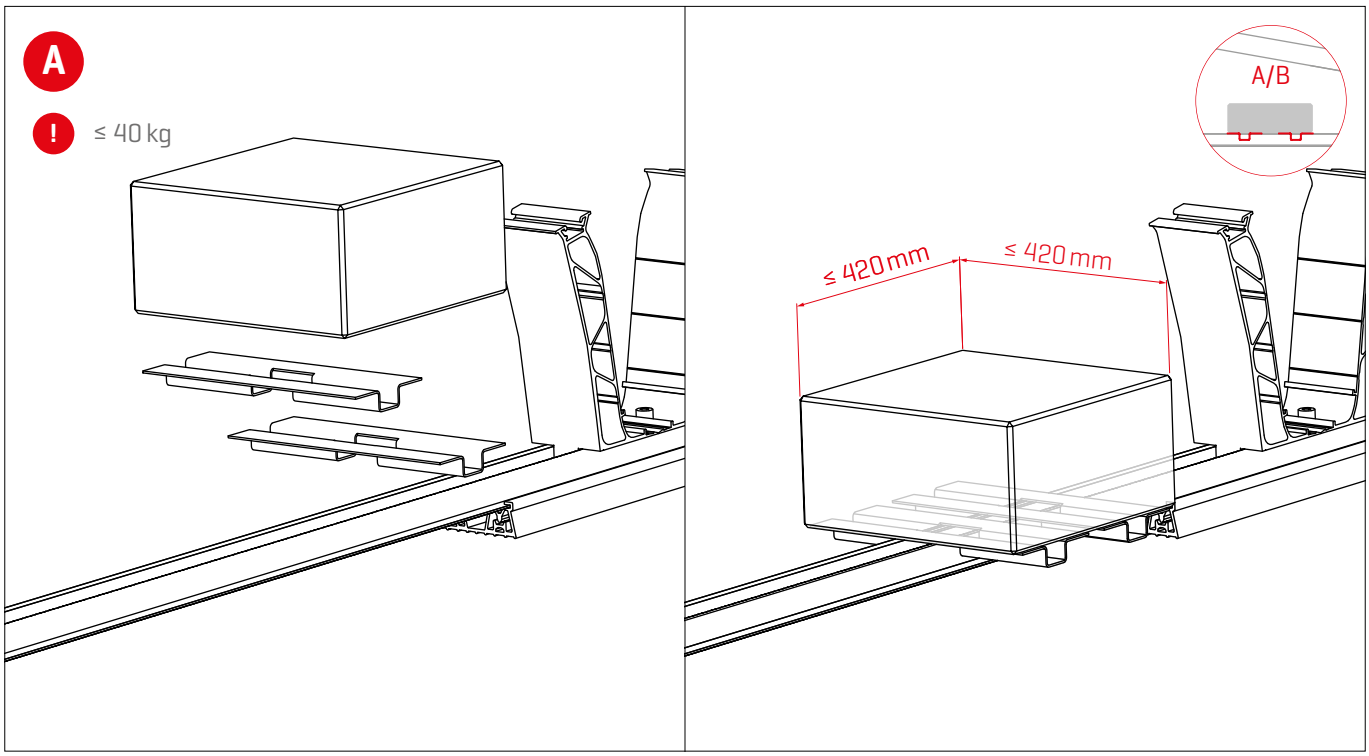

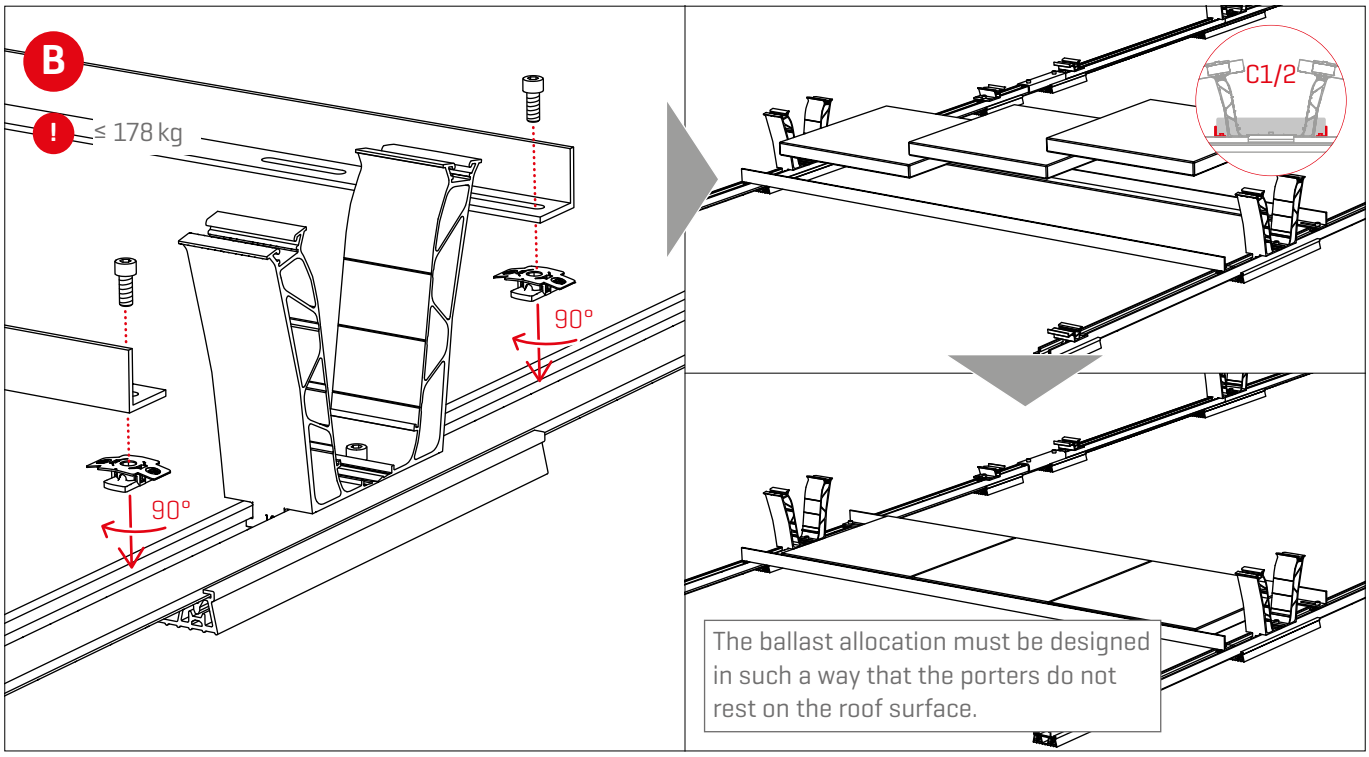

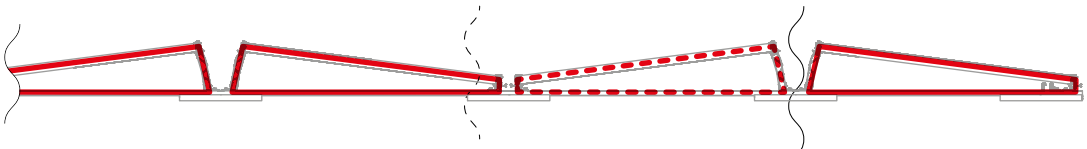

! If module in edge area, place ballast outside!

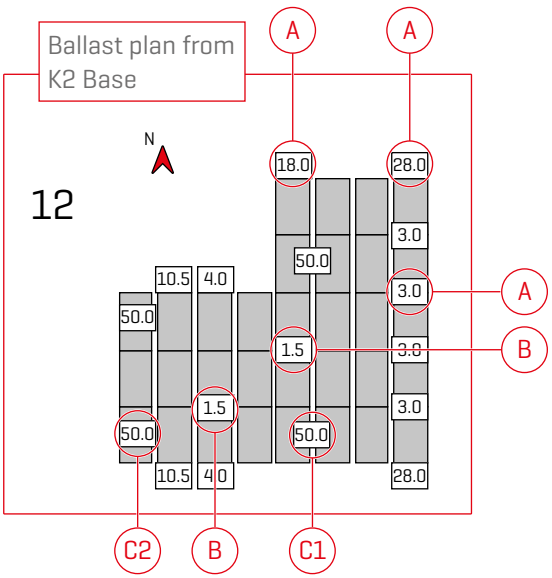

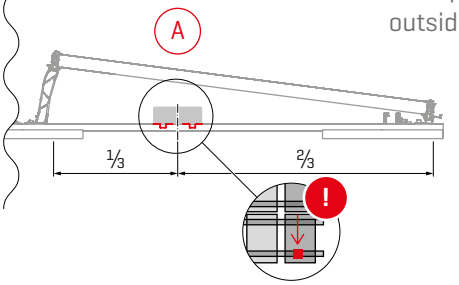

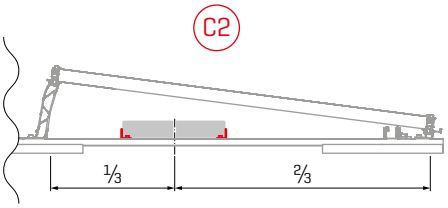

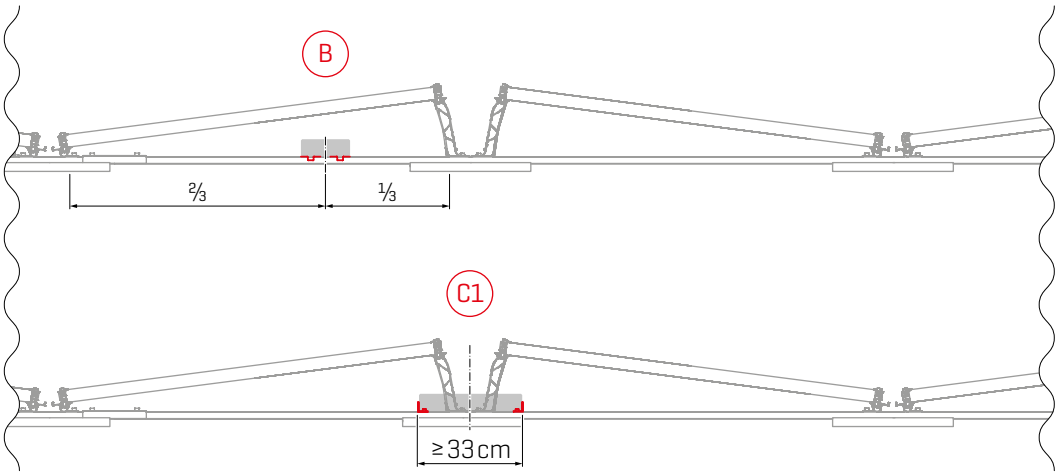

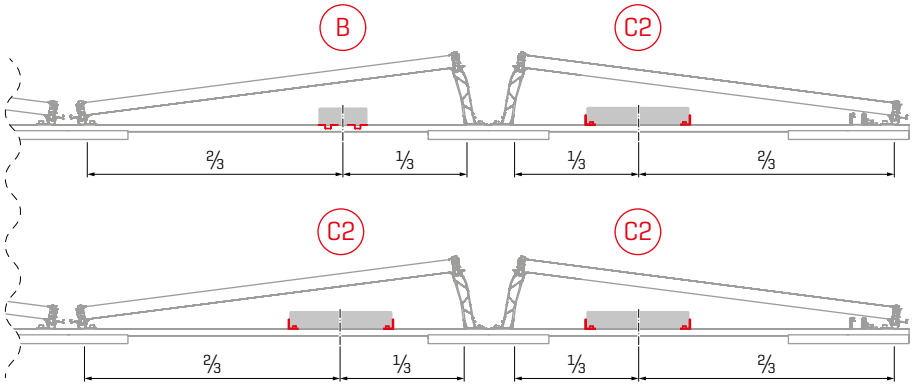

Optional assembly steps

Fixed connection with Dome FixPro using Solmont mounting base

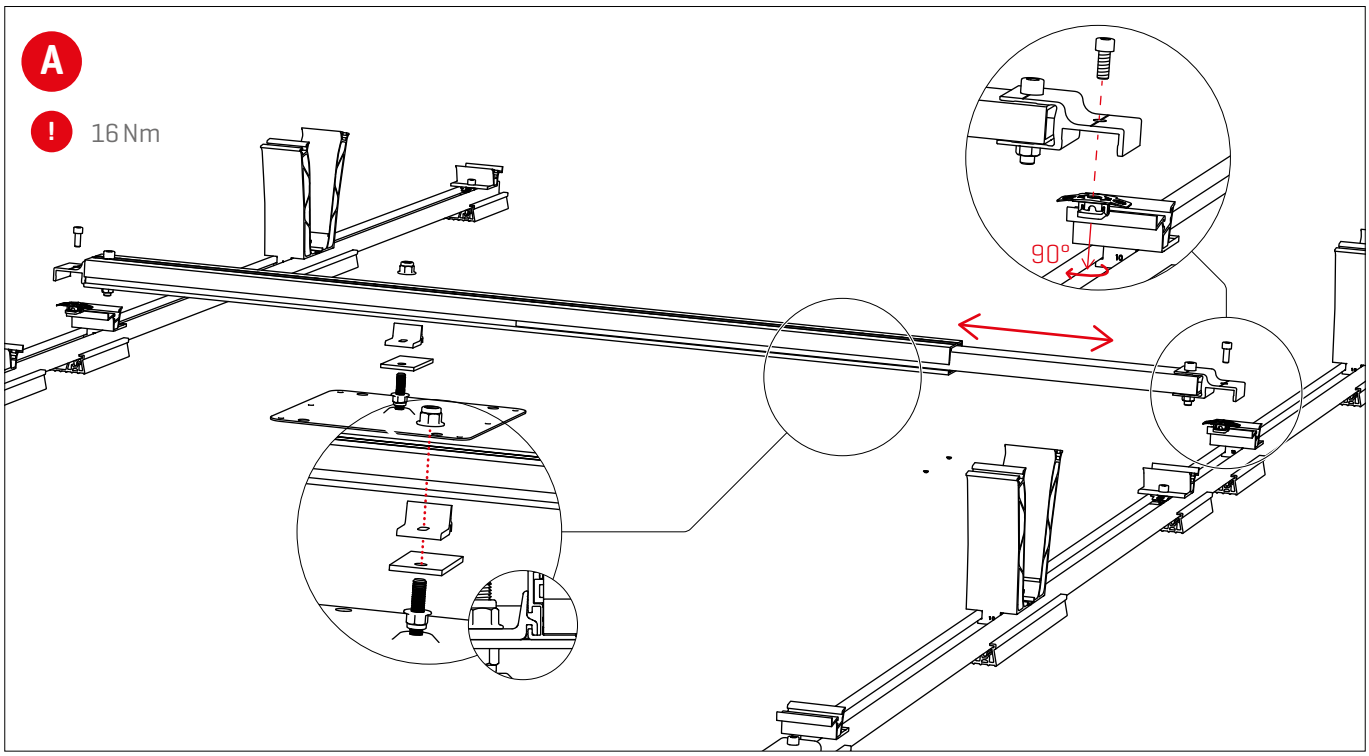

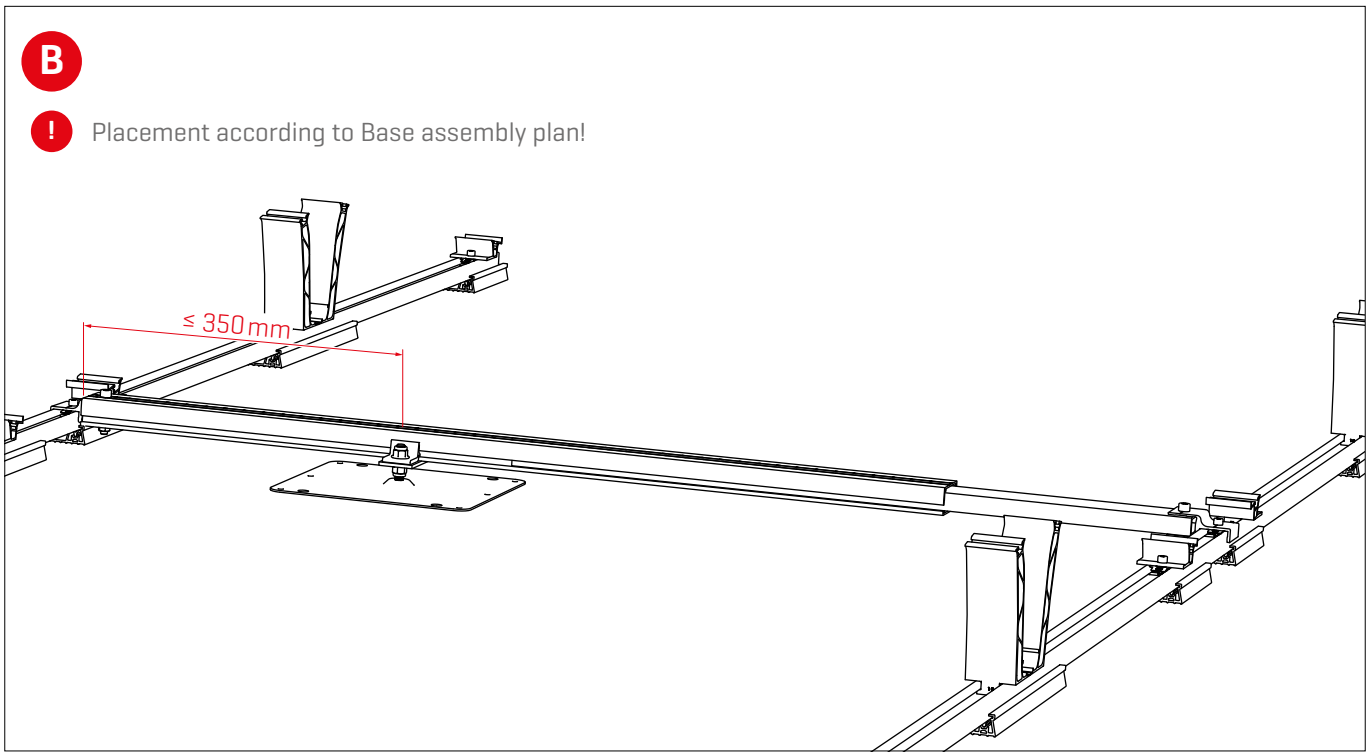

Cable-Manager

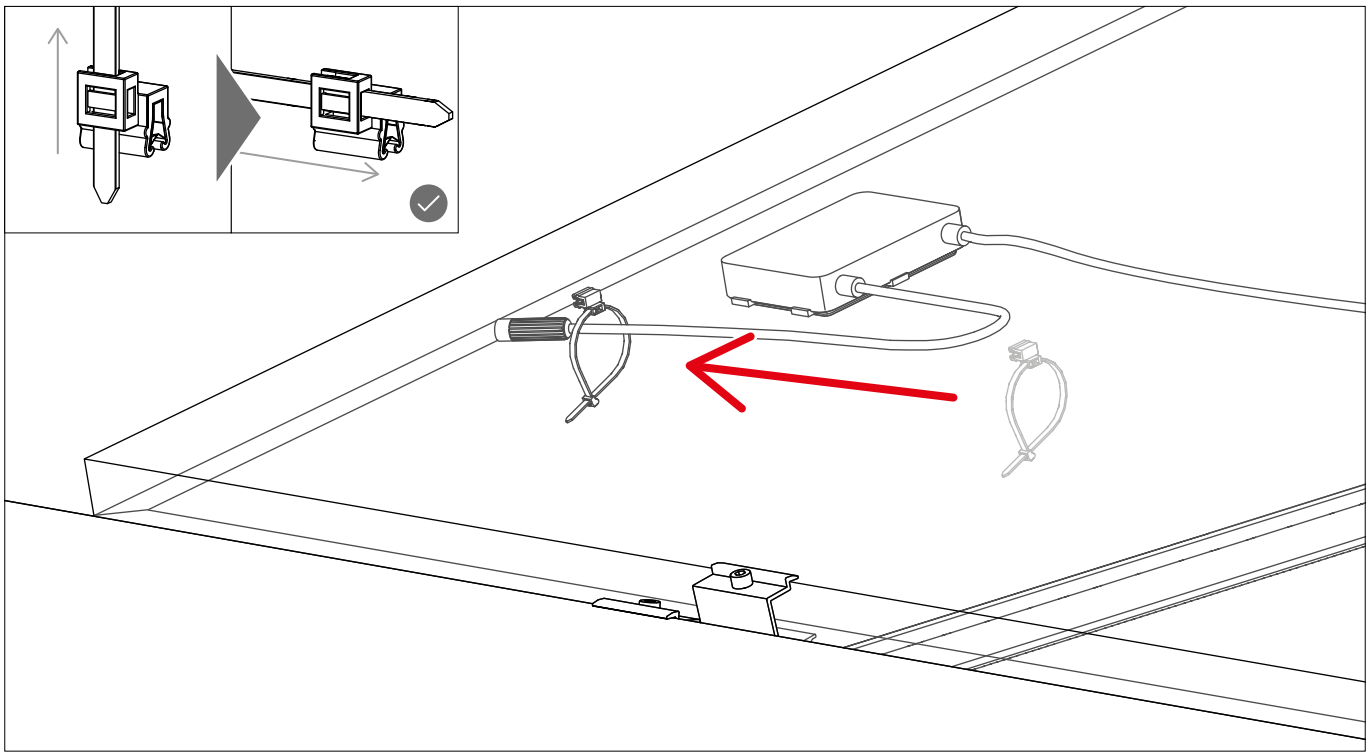

Module frame earthing with TerraGrif K2MI

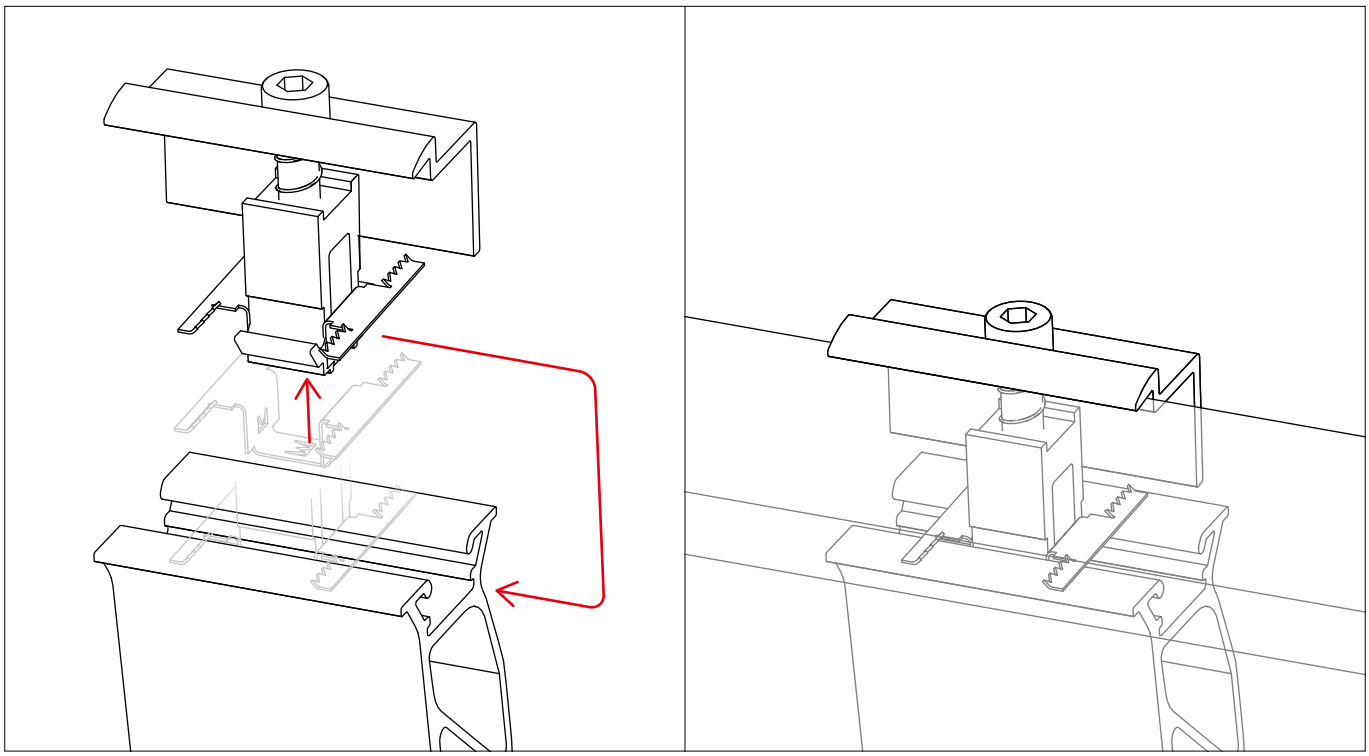

Cable management with PVX MultiMount

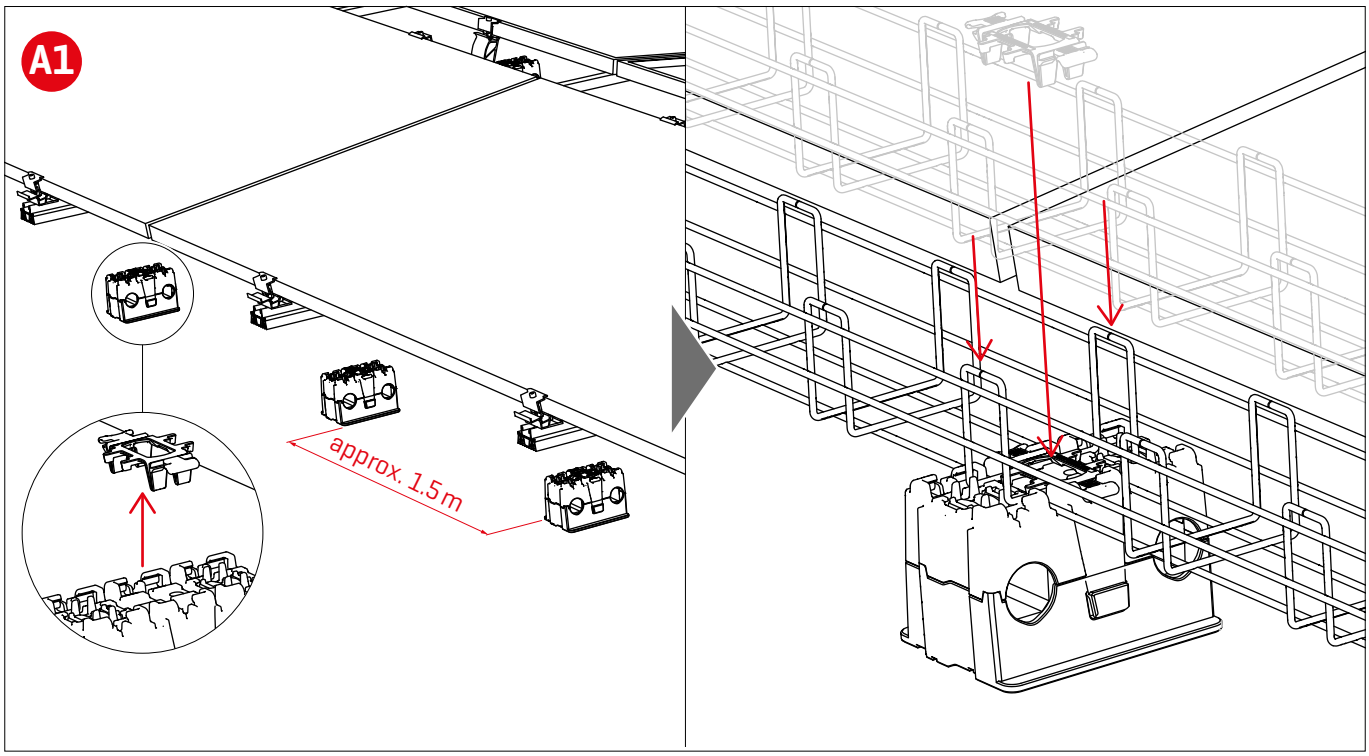

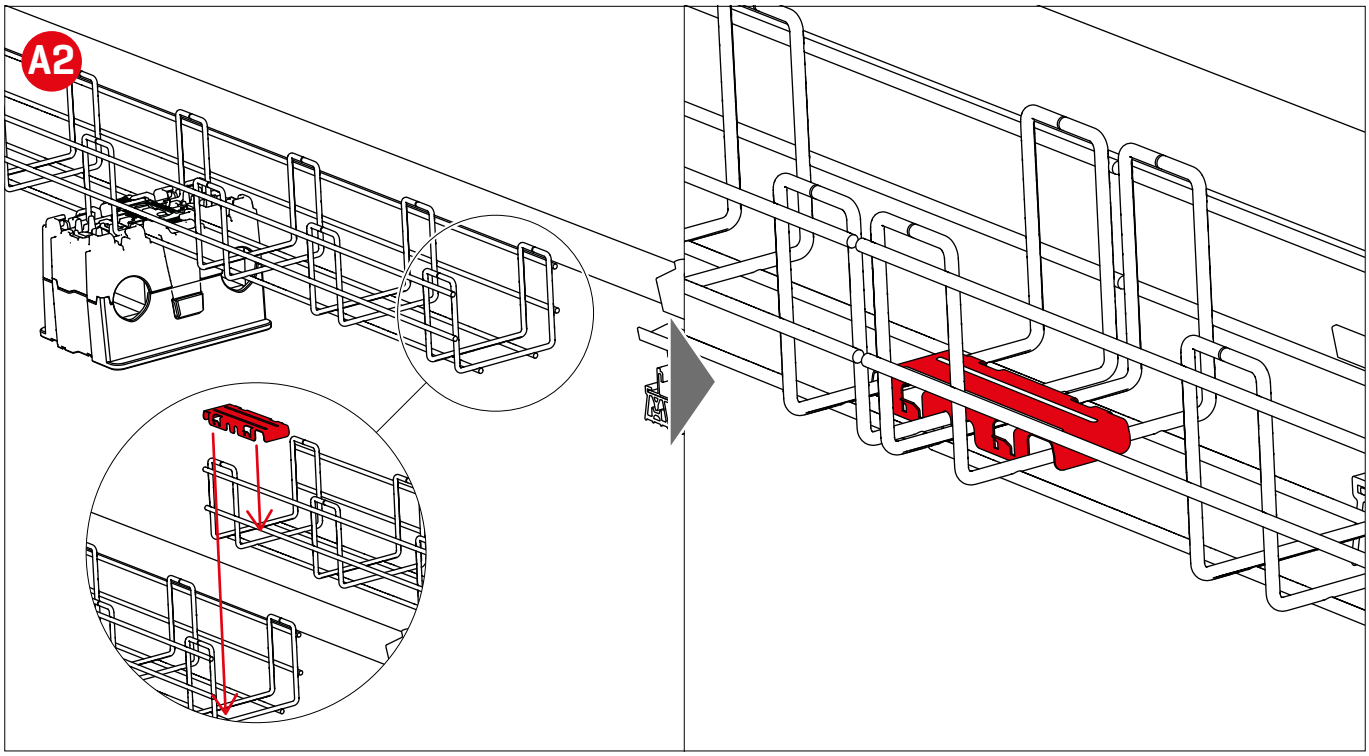

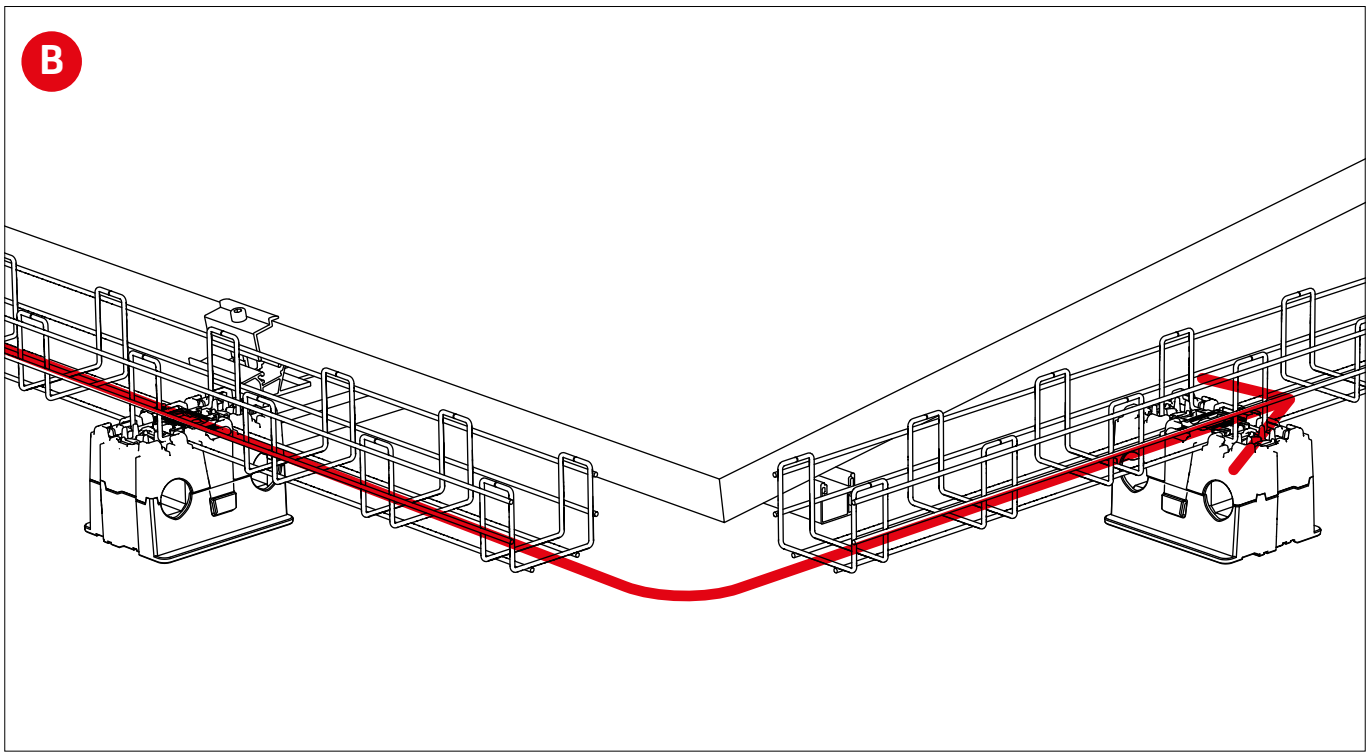
B

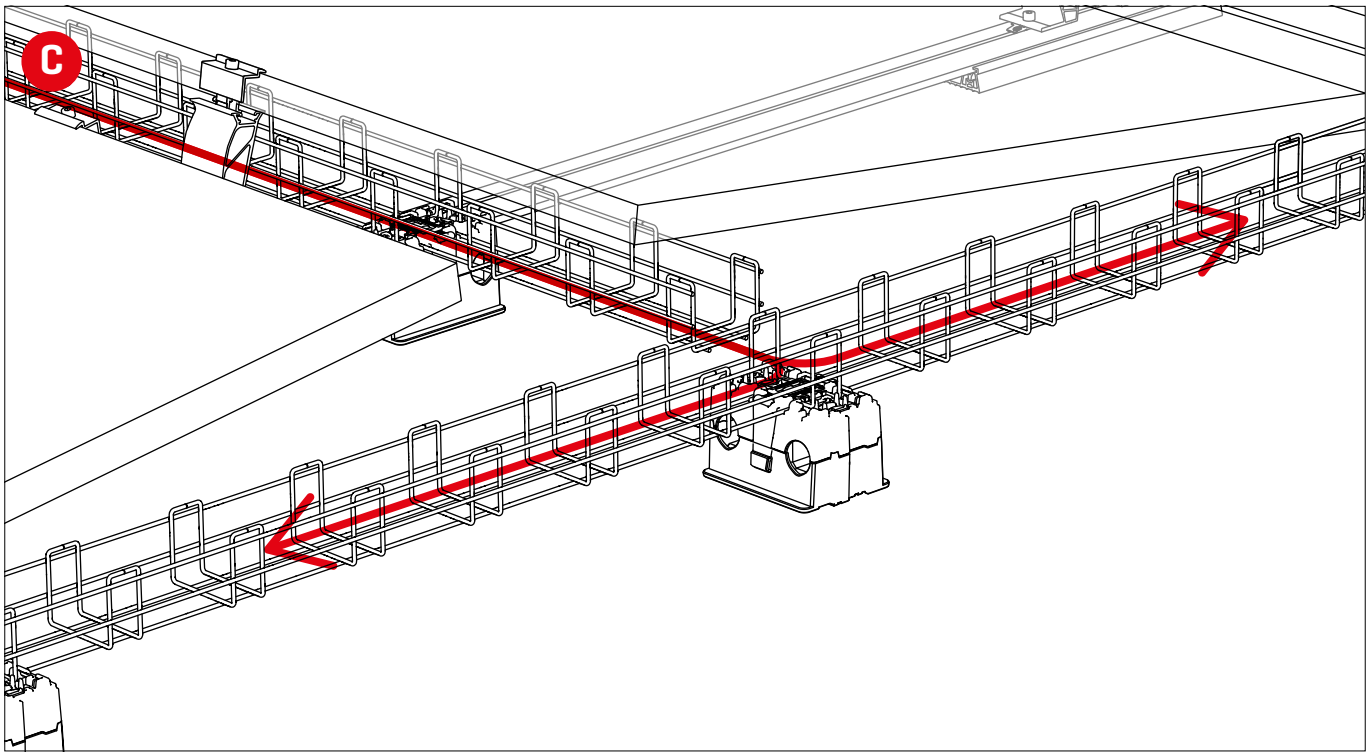
C

We support PV systems

Thank you for choosing a K2 mounting system.

Systems from K2 Systems are quick and easy to install. We hope these instructions have helped. Please contact us with any questions or suggestions for improvement.
Our contact data:

- **k2-systems.com/en/contact**
- **Service Hotline: +49 (0)7159 42059-0**

Our General Terms of Business apply. Please refer:
k2-systems.com

K2 Systems GmbH

Haldenstraße 1
71272 Renningen
Germany

+49 (0) 7159 - 42059 - 0
info@k2-systems.com
www.k2-systems.com