MERC-(1300W, 1100W)-P Smart PV Optimizer

Quick Guide

Issue: 06
Part Number: 31500HND
Date: 2023-09-11

HUAWEI DIGITAL POWER TECHNOLOGIES CO., LTD.

1 Product Overview

1. The Smart PV Optimizer is a DC-DC converter installed on the rear of PV modules in a PV system. It manages the maximum power point (MPP) of each PV module to improve the energy yield of the PV system, and performs functions such as module-level shutdown and module-level management.
2. An optimizer is delivered with two types of input power cables: long (1300 mm) or short (100 mm) cables. For PV modules with long cables, select optimizers with short cables; for PV modules with short cables, select optimizers with long cables.

Short Input Power Cables

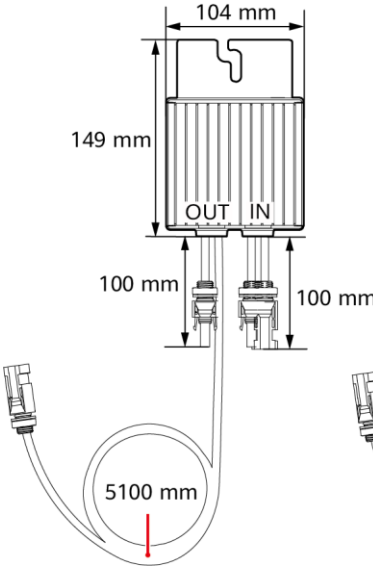

Long Input Power Cables

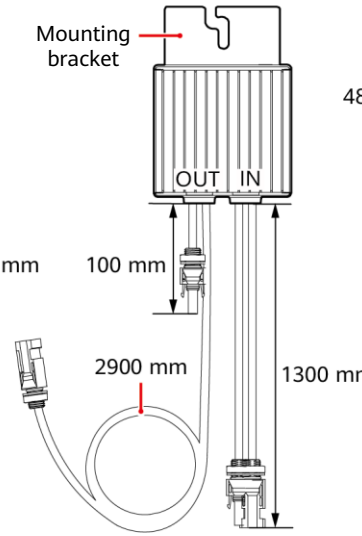

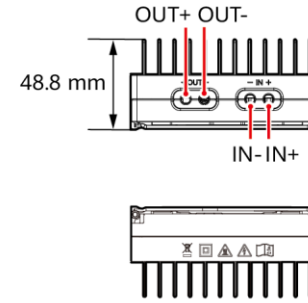

IV05W00008

Type II apparatus (enhanced insulation)	Burn warning	Electric shock warning	EU waste electrical and electronic equipment (WEEE) mark	Refer to documentation
				

2 Installing the Device

2.1 Installation Requirements

Clearance

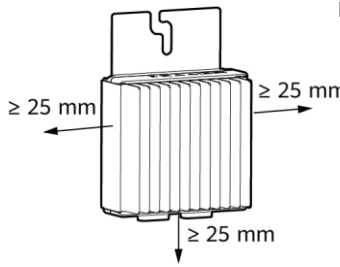

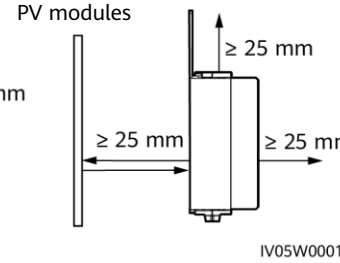

IV05W00010

Copyright © Huawei Digital Power Technologies Co., Ltd. 2023. All rights reserved.

1. If optimizers and PV modules are installed close to the rooftop (for example, color steel tile rooftop), ensure that the optimizers are well ventilated. It is recommended that the ambient temperature be less than or equal to 70℃. If the ambient temperature exceeds 70℃, the optimizers may shut down for overtemperature protection. After the operating temperature decreases, the optimizer automatically recovers with no risk of damage.

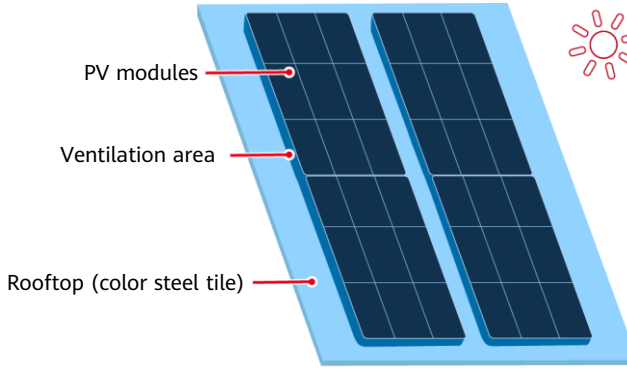

2. Do not install optimizers in positions that may be submerged in water.

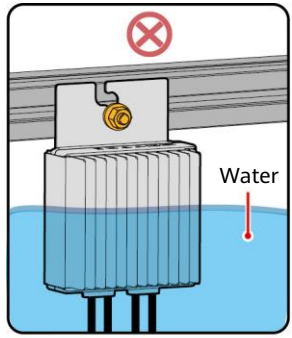

3. Improper installation and operations of optimizers may cause fire. Do not store flammable or explosive materials in the installation area.

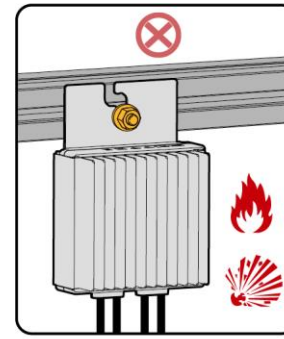

4. Do not cut the cables delivered with the optimizers. Otherwise, the warranty will be voided.

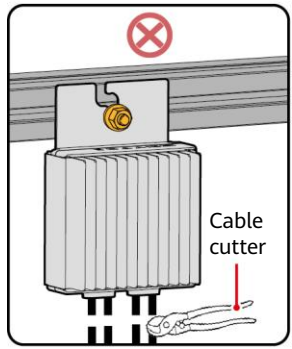

5. Avoid direct sunlight.

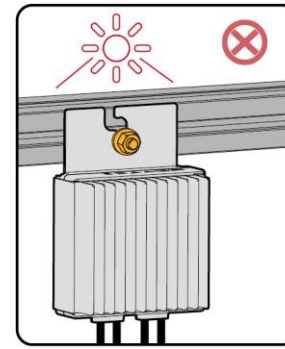

2.2 Installing the Optimizer

1. Select optimizers based on the installation scenario.

NOTICE

Properly plan the installation position of optimizers to ensure that the cables between the optimizer and the PV module and between adjacent optimizers can be properly connected, and the maximum communication distance between the optimizer and the solar inverter is within 350 m.

- For PV modules with long power cables, select optimizers with short input power cables. The PV modules can be installed vertically or horizontally.

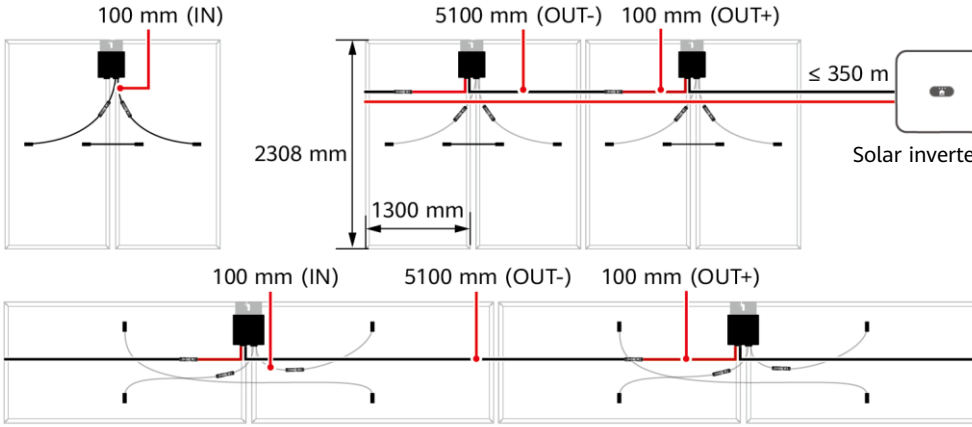

- For PV modules with short power cables, select optimizers with long input power cables. The PV modules can be installed only vertically.

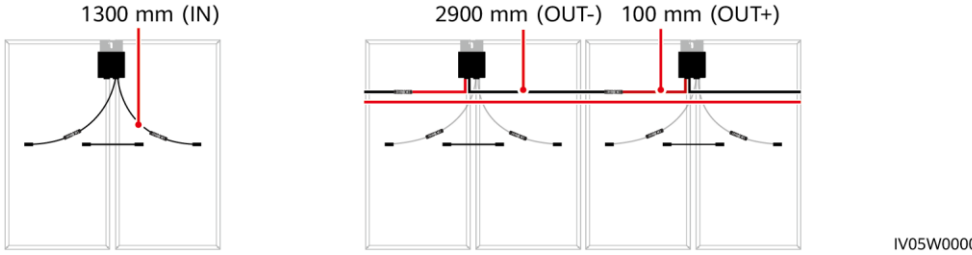

2. After determining the installation position of the optimizer, remove the SN label from the optimizer and attach it to the physical layout template. For details, see instructions on the back of the physical layout template.

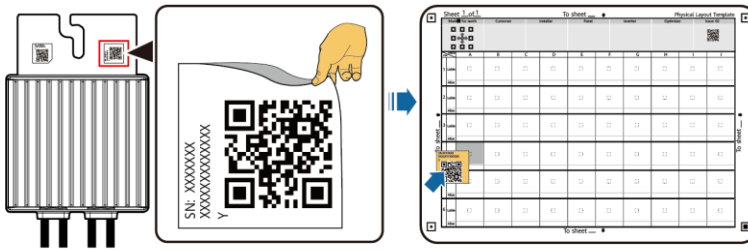

Note: Use a marker to mark information on the physical layout template if needed.

3. Install the optimizer based on the selected installation mode.

Installed on an Extruded Aluminum Profile – T-shaped Bolt

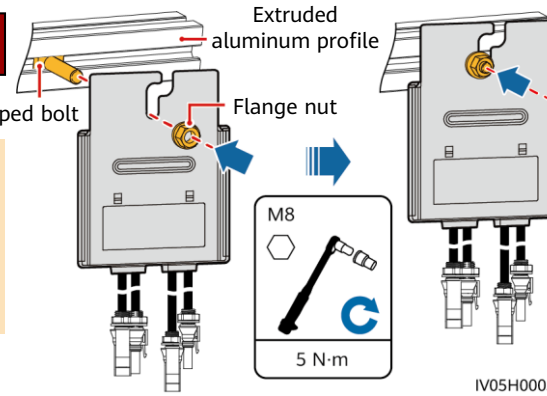

NOTE

- The optimizer is mounted to an aluminum profile on the front or rear side with T-shaped bolt and nut.
- The T-shaped bolt and nut need to be purchased separately from Huawei. The bolt dimensions are as follows.

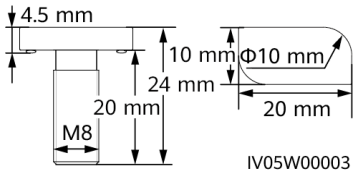

Installed on a PV Module Frame – Bolt Assembly

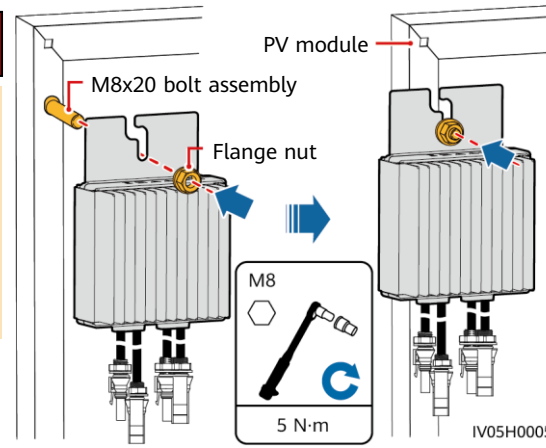

NOTE

- Before installation, ensure that a mounting hole has been reserved on the PV module frame.
- The bolt assembly and nut need to be purchased from a third party. Ensure that the length meets the installation requirements of the PV module frame.

Installed on a PV Module Frame – Frame Mounting Bracket

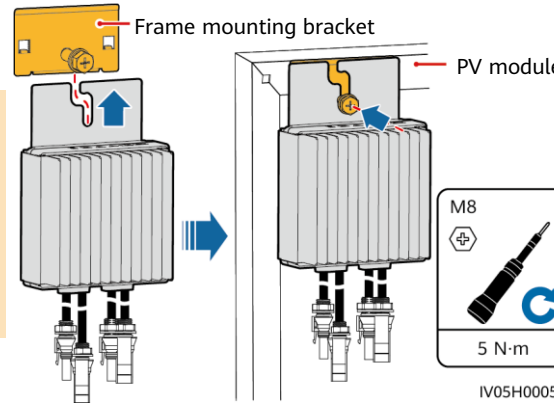

NOTICE

- Do not press the optimizer mounting bracket against the positioning pole of the frame mounting bracket.
- Purchase the frame mounting bracket separately from Huawei.
- Install the PV module after the optimizer is installed.

3 Installing the Optimizer Cables

NOTICE

Ensure that the input (IN) and output (OUT) cables of the optimizer are correctly connected. If they are reversely connected, the device may be damaged.

1. Connect the optimizer input (IN) cable to the PV module connection box.
2. Connect the positive probe of the multimeter to the positive output terminal of the optimizer and the negative probe to the negative output terminal. Check the output voltage of a single optimizer.

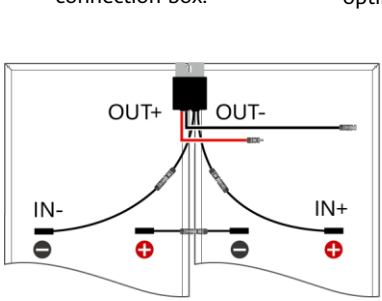

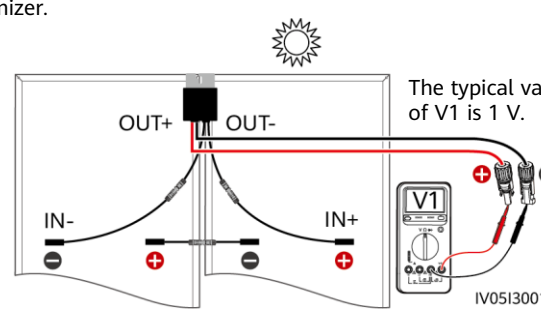

The typical value of V1 is 1 V.

Voltage	Cause	Suggestion
0.95 V ≤ V1 ≤ 1.05 V	The optimizer is normal.	-
V1 > 1.05 V	The optimizer is faulty.	Replace the optimizer.
V1 < 0.95 V	• The irradiance is low. • The optimizer input power cables are not connected. • The optimizer cables are incorrectly connected. • The optimizer is faulty.	1. Measure the voltage when the irradiance is adequate. 2. Connect the optimizer input power cables. 3. Correct the optimizer cable connections. Connect the optimizer input power cables to the PV module output power cables. 4. If the voltage is still abnormal, replace the optimizer.
V1 ≈ –1 V	The probes are reversely connected.	Reconnect the positive and negative probes correctly.

3. Check that the optimizer and its input cables are properly connected, and then connect the optimizer output power cables. Measure the PV string voltage when the sunlight is sufficient.

Configuration Scenarios

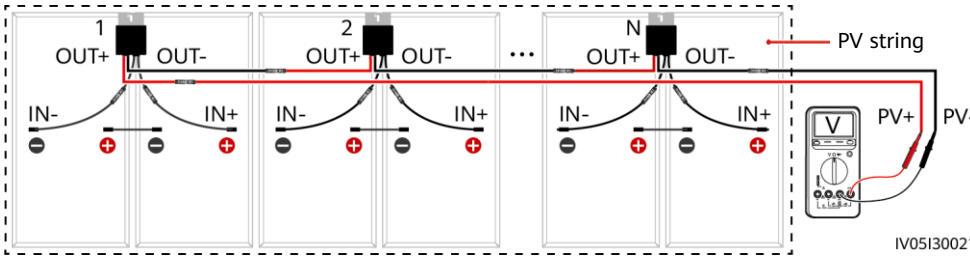

Voltage	Cause	**Suggestion**
The PV string voltage is 0.	• The PV string is open-circuited. • The cables are not connected to the same PV string.	1. Check whether the PV string is open-circuited. 2. Identify the string cables correctly.
The PV string voltage is a negative value.	• The probes are reversely connected. • The cable labels are incorrect.	1. Reconnect the positive and negative probes correctly. 2. Prepare cable labels correctly.
The value of PV string voltage is less than the number of optimizers.	• Some optimizer input power cables are not connected. • Some optimizer output power cables are not connected. • Some optimizer output power cables are reversely connected.	Check whether PV modules and PV string cables are correctly connected.
The value of PV string voltage is greater than the number of optimizers.	• The actual number of optimizers in the string is greater than expected. • PV modules are directly connected to PV strings without being connected to optimizers.	1. Check whether the number of optimizers in the PV string is correct. 2. Check whether PV modules and PV string cables are correctly connected.

4. Connect cables between the PV string and the solar inverter.

NOTE

- To ensure reliable communication between the inverter and optimizers, the AC and DC power cables must be routed in different troughs or pipes with a minimum of 10 cm spacing in between.
- For details about how to configure PV strings with optimizers connected to the inverter, see section 2.3 "Configuration Principles" in the user manual. Incorrect configurations may cause serious consequences.
- To reduce EMC impact, route the home-run cable next to the cables between the PV modules (keeping the positive and negative cables close to one another or twisting them together) as shown in the following figure for either a single string installation or a multi-string installation.

Required Routing

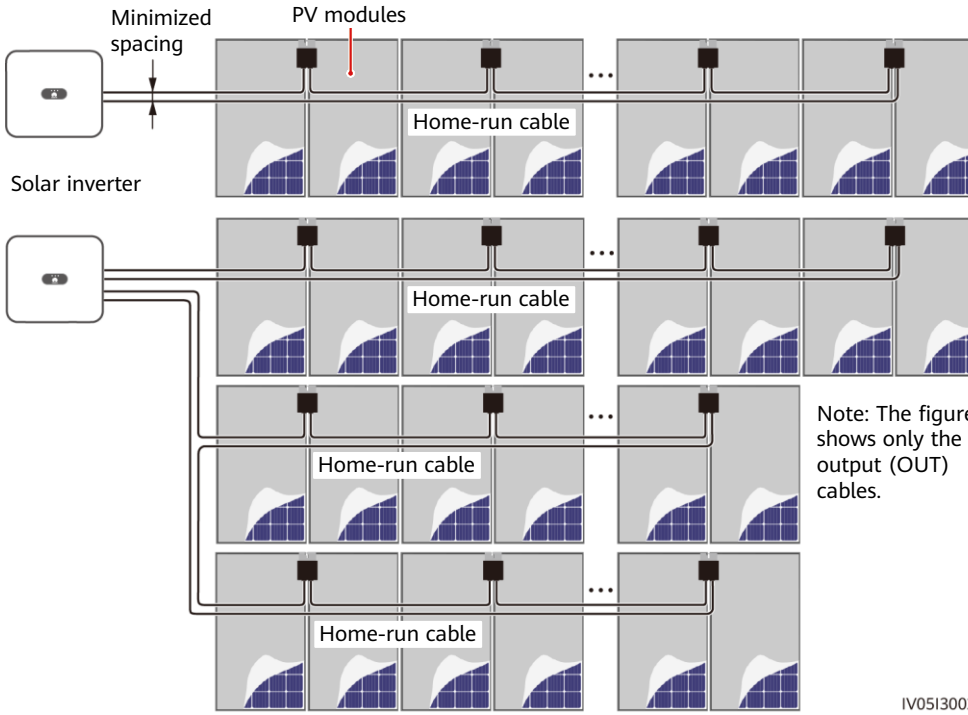

Prohibited Routing

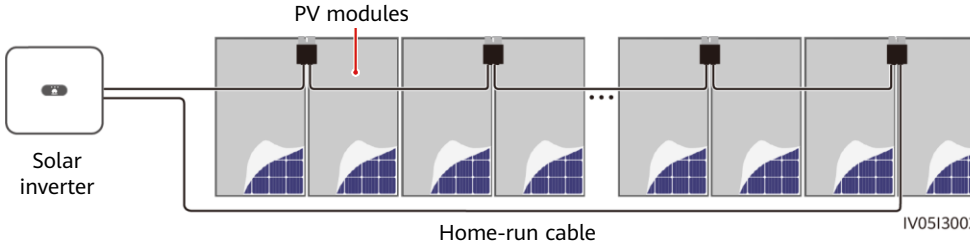

4 Power-On Commissioning

1. The physical layout of the optimizers must be provided so that you can easily locate faulty optimizers based on the physical layout diagram.
2. The physical layout of the optimizers must be provided to use the optimizer disconnection detection function. After optimizer disconnection detection is performed, the locating result can be viewed on the **Layout** screen.
3. Choose **Maintenance > Subdevice management > Auto search** to add an optimizer. For details about the physical layout of optimizers, see the *MERC Smart PV Optimizer User Manual* or *FusionSolar App Quick Guide*. You can scan the QR code to obtain the *FusionSolar App Quick Guide*.

NOTICE

If changes occur in the system, such as adding, deleting, and replacing an optimizer, adjusting the physical position of an optimizer, or adjusting the PV string connected to the solar inverter input, turn off the DC and AC switches of the inverter and wait for 5 minutes before performing the operation to avoid personal injuries. After the change is performed, the optimizer search process must be performed again and the physical layout diagram must be updated. Otherwise, the networking is incomplete, optimizer faults cannot be located, or the system fails.

5 Troubleshooting

1. Open the FusionSolar app, log in to intl.fusionsolar.huawei.com using the installer account, choose **Me** > **Device commissioning**, and connect to the WLAN hotspot of the solar inverter.
2. Select **installer** and enter the login password. Tap **Log In**. The device commissioning screen is displayed.
3. Choose **Device monitoring**, select the PV string and check the optimizer status.

Status	Description
Green	The optimizer is running properly.
Gray	The optimizer is offline. Check that the SN and location information are correct and search for the device again.
Red	The optimizer is faulty.
Yellow	The optimizer is disconnected.

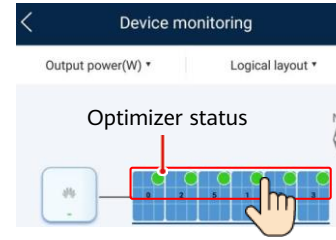

Alarm	Cause	Suggestion
Input overvoltage	Optimizer input overvoltage occurred.	Check whether the open-circuit voltage of the PV module exceeds the maximum input voltage of the optimizer.
Overtemperature protection	The optimizer internal temperature is too high.	1. Check the ventilation and ambient temperature at the optimizer installation position. If the ventilation is poor or the ambient temperature exceeds the upper threshold, improve the ventilation and heat dissipation. 2. If the ventilation and ambient temperature are normal, contact your installer.
Internal hardware fault	An internal fault occurred in an optimizer.	Contact your installer.
Output terminal overtemperature	The output terminal temperature of some optimizers is abnormal.	Contact your installer to replace the faulty optimizer and the optimizer connected to the short output cables of the faulty optimizer.
Output backfeed	Optimizer output backfeed occurred.	1. Check whether PV modules are shaded when PV strings are connected in parallel. 2. If the fault persists, contact your installer.
Abnormal output voltage	The optimizer output voltage is abnormal.	1. When the irradiance is normal, perform optimizer search again. 2. Check the voltage of the corresponding PV string. If the voltage is greater than 0 V, power off the system and check whether the extension cable of the abnormal optimizer is correctly connected. 3. Check the voltage of the corresponding PV string. If the voltage is 0 V, power off the system and check the cable connection of the PV string. If there is an open circuit, rectify the cable connection of the PV string. If the polarity is incorrect, reconnect the PV string in the correct polarity. After the open circuit or reverse polarity is rectified, power on the system and perform an optimizer search again. If the alarm persists, check whether the extension cable of the abnormal optimizer is correctly connected. 4. If the fault persists, contact your installer. Note: The polarity at both ends of the extension cable must be opposite (one end is a positive connector, and the other is a negative connector). To determine the PV string polarity, see "3 Installing the Optimizer Cables."
Upgrade failed	The optimizer software upgrade failed.	1. When the irradiance is normal, perform the optimizer upgrade again. 2. If the fault persists, contact your installer.

6 Replacing an Optimizer

1. Power off the solar inverter and remove the faulty optimizer.
2. Install a new optimizer and correctly connect its cables.
3. Power on the solar inverter. Log in to the FusionSolar app and tap the plant name on the **Home** screen to access the plant screen. Choose **Devices** > **Inverter**, select the inverter corresponding to the faulty optimizer, tap **Optimizer Search**, and perform operations as prompted to search for optimizers.

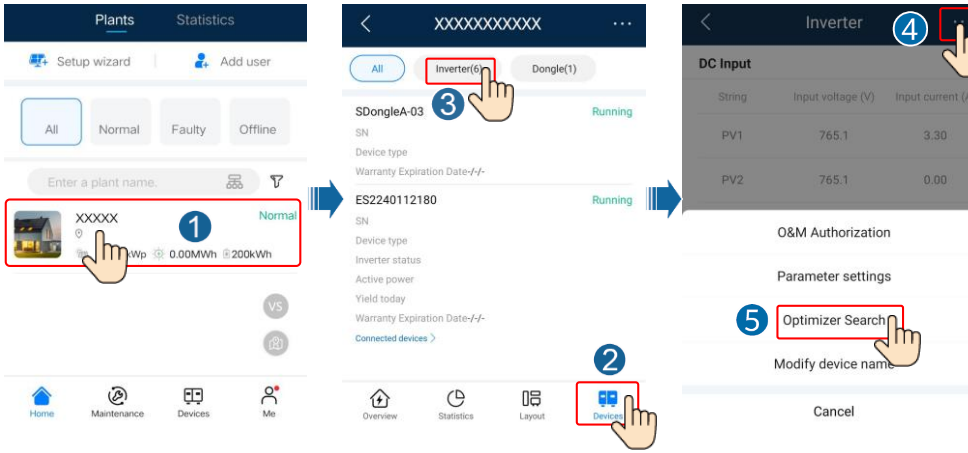

4. Choose **Devices** > **Connected devices** > **Optimizer**, tap **Optimizer No.**, select the faulty optimizer, tap **Device Replacement**, and replace the optimizer as prompted.

NOTE

- If *N* optimizers need to be replaced, perform the preceding procedure for *N* times.
- After the optimizer is replaced, the new optimizer automatically inherits the energy yield, physical layout, and logical layout of the faulty optimizer.

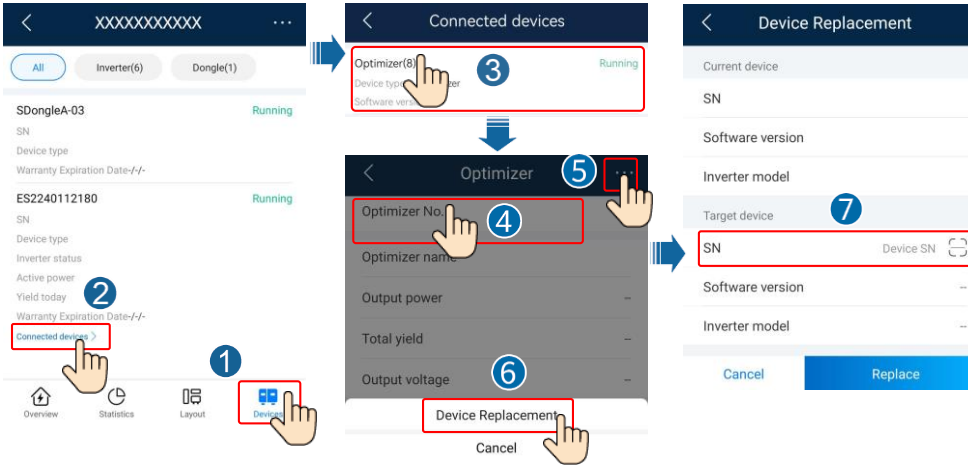

7 Precautions

⚠ WARNING

- The optimizer uses Staubli MC4 DC connectors. Ensure that the DC connectors to be connected are of this model. If the DC connectors to be connected are not of the Staubli MC4 model, the connector compatibility report and third-party lab (TUV, VED, or Bureau Veritas) report from the DC connector manufacturer must be available. Using incompatible DC connectors may result in serious consequences. The resulting device damage is beyond the warranty scope.
- Optimizers are not supported in off-grid scenarios.
- Partial configuration is not allowed. All PV modules must be connected to optimizers. Otherwise, the inverter will not start and serious consequences may occur. The resulting device damage is not covered by the warranty.

NOTICE

- The information in this document is subject to change without notice. Every effort has been made in the preparation of this document to ensure accuracy of the contents, but all statements, information, and recommendations in this document do not constitute a warranty of any kind, express or implied.
- Only qualified and trained electrical technicians are allowed to operate the device. Operation personnel should understand the composition and working principles of the grid-tied PV power system and local regulations.
- Carefully read this document prior to installation to get familiar with product information and safety precautions. Huawei shall not be liable for any consequence caused by violation of the storage, installation, and operation regulations specified in this document and the solar inverter user manual.
- Use insulated tools when installing the device. For personal safety, wear proper personal protective equipment (PPE).
- If an optimizer does not connect to any other device, connect the OUT+ and OUT– ports of the optimizer respectively to the IN+ and IN– ports to protect the terminals from water.
- It is recommended that the positive and negative cables (PV+/PV–) between the optimizer and the solar inverter be placed side by side to avoid cable winding.
- The input end of the optimizer should be connected to the PV module connection box, and the output end to the adjacent optimizer or a solar inverter. Do not reversely connect the input and output cables. Otherwise, the optimizer may be damaged.
- The screenshots are for reference only. The actual screens may vary. For details about the physical layout of optimizers, see the *MERC Smart PV Optimizer User Manual* or *FusionSolar App Quick Guide*.

Huawei Digital Power Technologies Co., Ltd.
Huawei Digital Power Antuoshan Headquarters, Futian
Shenzhen 518043, People's Republic of China
solar.huawei.com