GOODWE

V1.8-2026-07-30

ET Series Hybrid Inverter

(GW50K-ET-L-G10 | GW75K-ET-G10 | GW80K-ET-G10 | GW99.99K-ET-G10 | GW100K-ET-G10)

BT Series AC-Coupled Inverter

(GW75K-BT-G10 | GW80K-BT-G10 | GW99.99K-BT-G10 | GW100K-BT-G10)

Quick Installation Guide
快速安装指导

Copyright © GoodWe Technologies Co., Ltd. 2026. All rights reserved.
版权所有©固德威技术股份有限公司 2026。保留所有权利。

EN-English

- The information in this quick installation guide is subject to change due to product updates or other reasons. This guide cannot replace the product labels or the safety precautions in the user manual unless otherwise specified. All descriptions here are for guidance only.
- All operations should be performed by trained and knowledgeable technicians who are familiar with local standards and safety regulations.
- Strictly follow the installation, operation, and configuration instructions in this guide and user manual. The manufacturer shall not be liable for equipment damage or personal injury if you do not follow the instructions.

ZH-中文

- 因产品版本升级或其他原因，本文档内容会不定期进行更新。如无特殊约定，本文档不可取代产品标签或用户手册。本文档中的所有描述仅作为使用指导。
- 设备所有操作必须由专业、合格的电气技术人员进行，技术人员需熟知项目所在地相关标准及安全规范。
- 未按照本文档或对应用户手册要求安装、使用、配置设备造成的设备损坏或人员伤害，不在设备厂商责任范围之内。

Official Website

官方网站

More Info

ET 50-100kW 用户手册

340-01416-04

GoodWe Technologies Co., Ltd.
No. 90 Zijin Rd., New District,
Suzhou, 215011, China
www.goodwe.com
service@goodwe.com

固德威技术股份有限公司
中国 苏州 高新区紫金路90号
T: 400-998-1212
www.goodwe.com
service@goodwe.com

Procedure

1 EN Installation ZH 安装

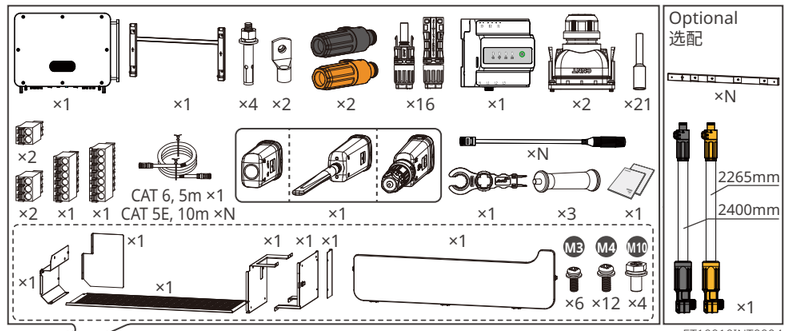

ET10010INT0004

N: Quantity depends on the inverter model.
N: 数量依据产品配置而定。

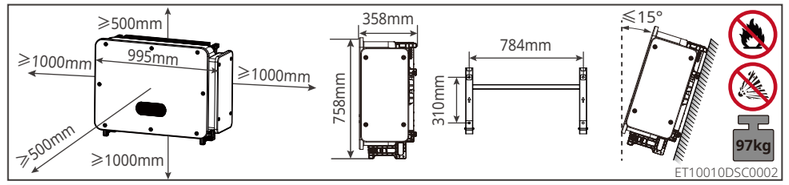

ET10010DSC0002

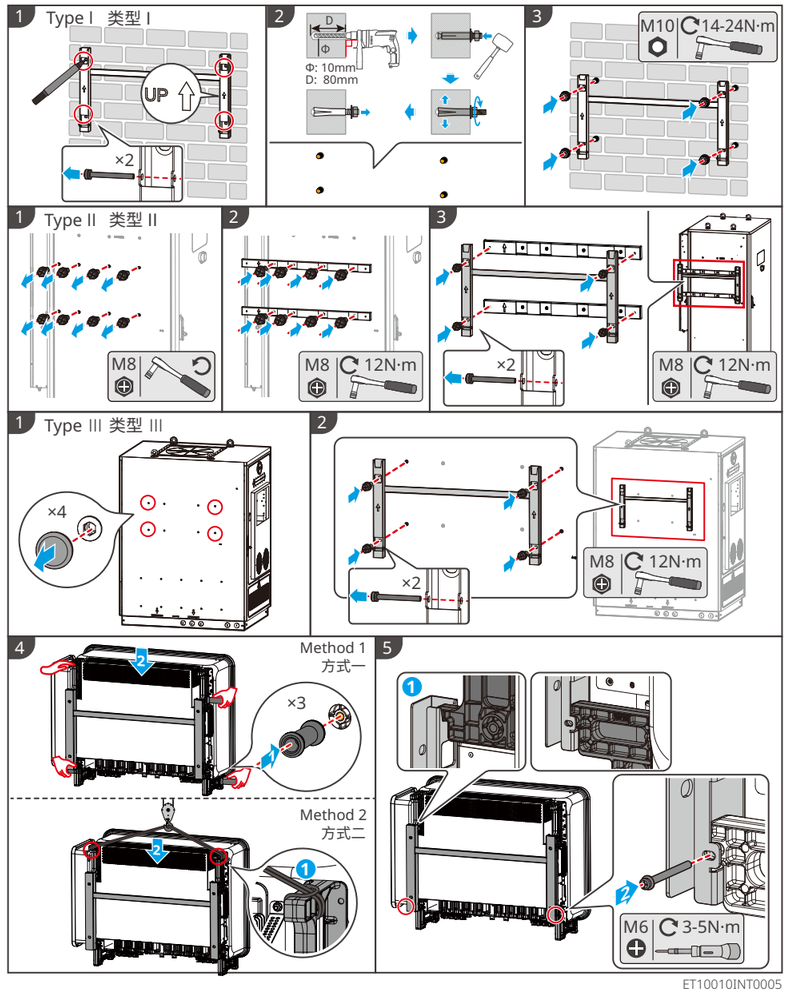

ET10010INT0005

Installation of inverter protective cover (Optional) / 安装逆变器防护罩（可选）

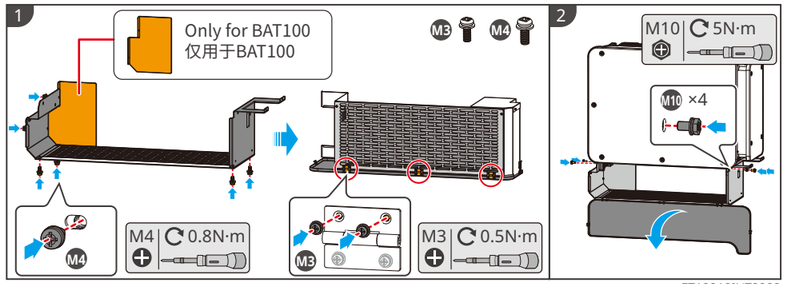

ET10010INT0009

2 EN Electrical Connection ZH 电气连接

PE (⏚)

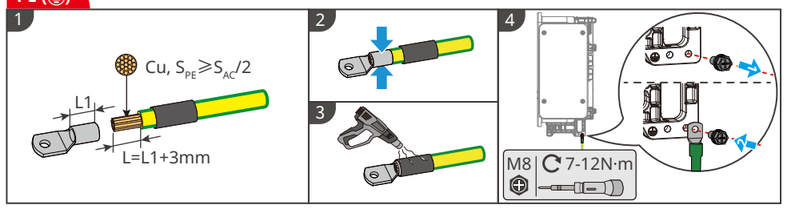

ET10010ELC0005

DC (PV) For Hybrid Inverter only/仅适用于混合逆变器

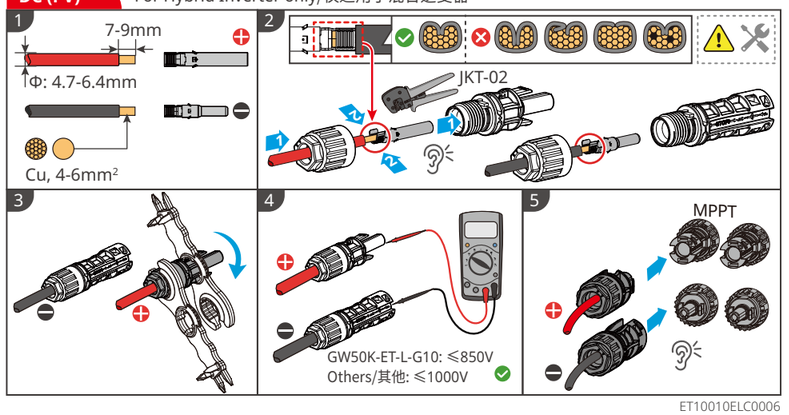

ET10010ELC0006

DC (BAT)

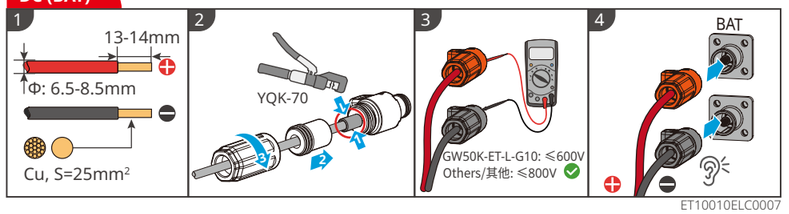

ET10010ELC0007

AC (AC OUTPUT)

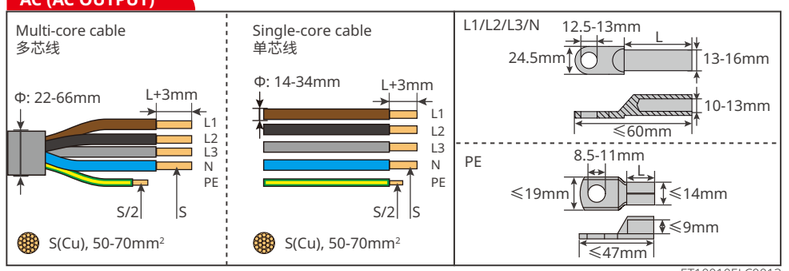

ET10010ELC0013

Procedure

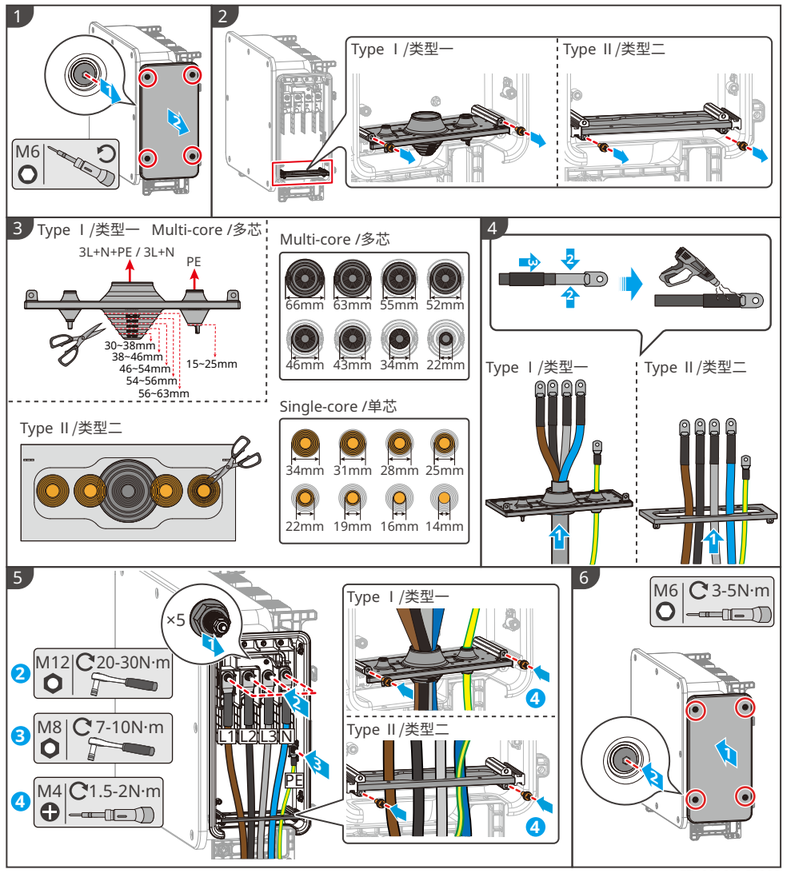

ET10010ELC0009

COM

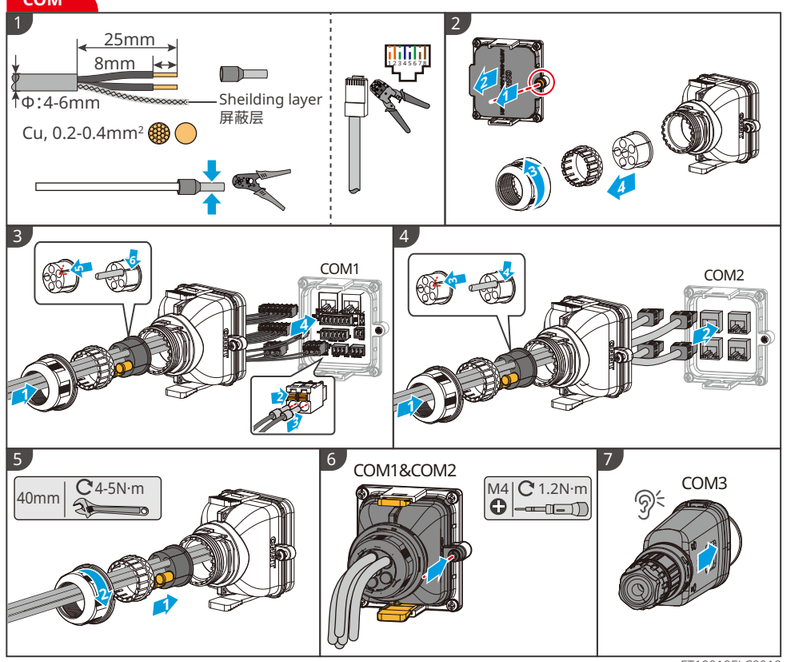

ET10010ELC0010

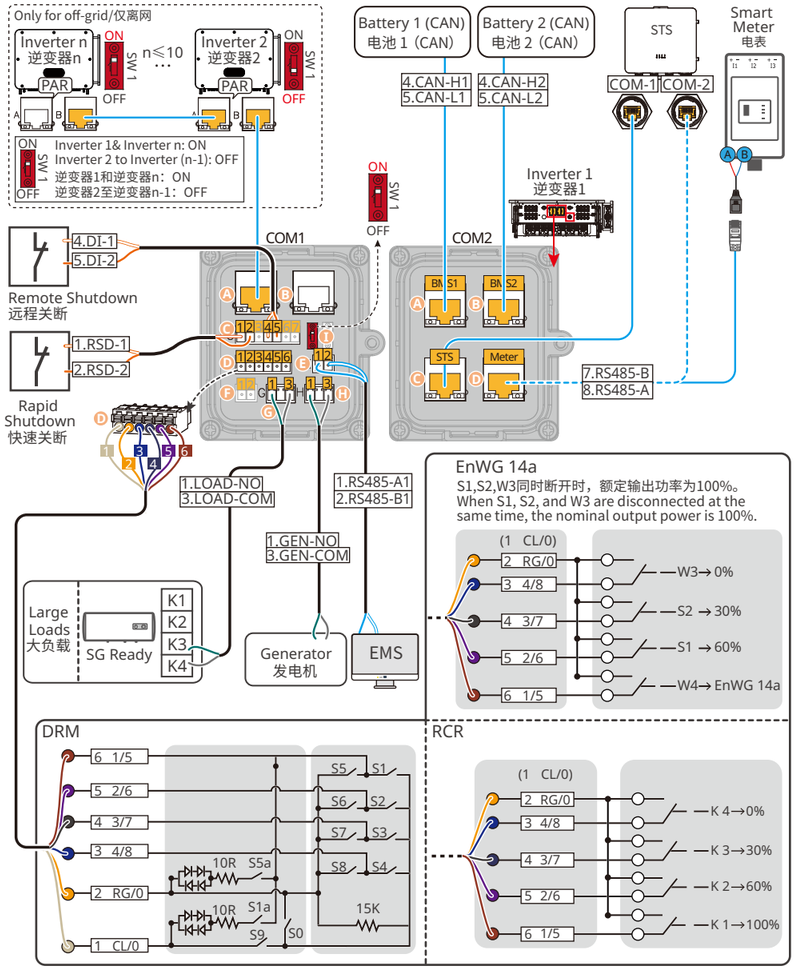

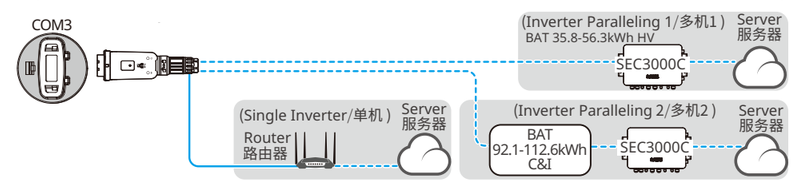

ET10010ELC0011

Installation of inverter protective cover /安装逆变器防护罩

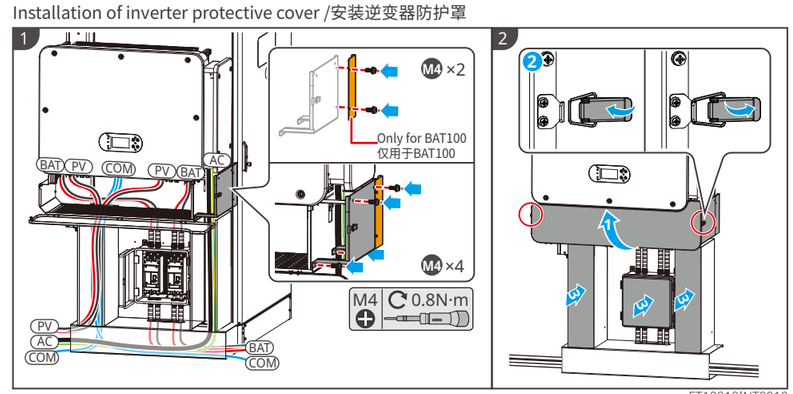

ET10010INT0010

3 EN Commissioning and Monitoring ZH 调测

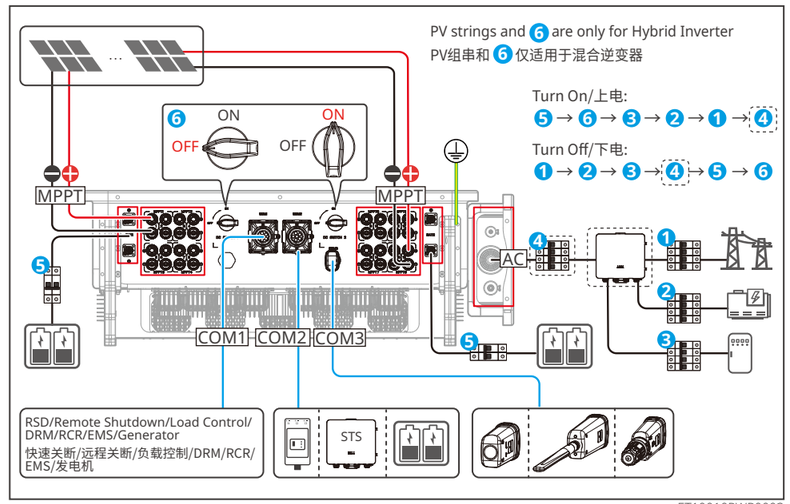

ET10010PWR0003

SEMS+ App or SEMS+ WEB

小固云窗+ App 或 小固云窗+ WEB

ET10010CON0001