Operating Instructions

Fronius Reserva Pro

12.0 kWh / 16.0 kWh / 20.0 kWh
24.0 kWh / 28.0 kWh / 32.0 kWh

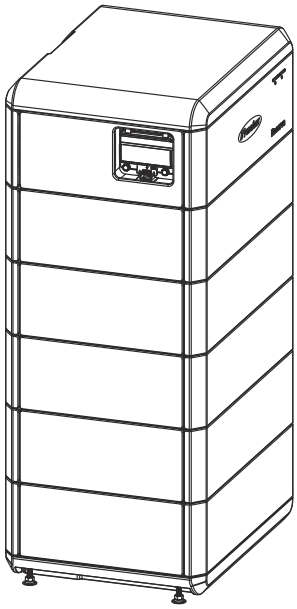

EN | Operating Instructions

42,0426,0606,EA 001-09012026

Table of contents

General information 5

Safety information 7
Explanation of warnings and safety instructions 7
Safety instructions and important information 7
Battery hazard 8
Recommended measures in case of emergencies 9
EMC measures 10
Electromagnetic fields 10
Protective earthing (PE), functional grounding 10
General 11
Information on the device 11
How information is presented in the document 12
Target group 13
Data security 13
Copyright 14
Fronius Reserva Pro 15
Device concept 15
Function overview 15
Scope of supply 16
Storage 17
Intended use 17
Foreseeable misuse 18
Different operating modes 19
Operating modes – Explanation of symbols 19
Operating mode – Solar energy 19
Operating mode – Self-consumption optimization 20
Operating mode – Backup power 20
Operating mode – Cost-optimized battery charging from the public grid 20
Energy flow direction of the inverter 21
Operating states (for battery systems only) 21
Operating controls and connections 23
Connection area 23
Operating controls 24
LED status indicator 24

Installation 27

General 29
System component compatibility 29
Choosing the Location 30
Selecting the battery location 30
Battery location requirements 31
Installation 32
Battery design 32
Requirements for connection 34
Various cable types 34
Permitted cables for the electrical connection 34
Permitted cables for the data communication connection 34
Electrical connection 35
Safety 35
Switching off the power to the photovoltaic system 35
Connecting the ground conductor (PE) 36
Connecting DC cables 36
Connecting DC cables for battery parallel operation 38
Connecting the data communication cables 41
Data communication PIN assignment 41
Optical-acoustic signal PIN assignment 41
Connecting the data communication cable to the inverter 42

Connecting a data communication cable for battery parallel operation ... 43
Terminating resistors for systems with a battery ... 45
Terminating resistors for a system with batteries in parallel operation ... 46
Finally... ... 49
Selecting the mounting material ... 49
Fitting the mounting bracket ... 49
Securing the cables in the connection area ... 50
Fitting the cover to the Reserva Pro BMS ... 50
Replacing/adding the Reserva Pro module to the battery system ... 51
Safety ... 51
Requirements for expanding the battery system ... 51
Setting the State of Charge (SoC) with Service Mode ... 51
Switching off the power to the photovoltaic system and battery ... 52
Removing the covers on the battery ... 53
Disconnecting and removing the Reserva Pro BMS ... 53
Installing a new Reserva Pro module ... 56
Fitting the Reserva Pro BMS ... 56
Fitting the side covers on the battery ... 57
Connecting the Reserva Pro BMS ... 57
Securing the cables in the connection area ... 58
Fitting the mounting bracket ... 58
Fitting the cover to the Reserva Pro BMS ... 59

Commissioning **61**

Switching on the photovoltaic system ... 63
Switching on the photovoltaic system ... 63
Manual system start ... 64
Requirements ... 64
Notification of system shutdown ... 64
Manual battery start (dark start) after a system shutdown ... 64
Starting backup power mode after a system shutdown ... 64
Settings – User interface of the inverter ... 65
General ... 65
Commissioning with the app ... 65
Commissioning with the browser ... 65
Adding a battery in the user interface of the inverter ... 66
Firmware update ... 66

Appendix **69**

Service, maintenance and disposal ... 71
Cleaning ... 71
Maintenance ... 71
Forced re-charging ... 71
Disposal ... 71
Warranty provisions ... 72
Fronius manufacturer's warranty ... 72
Technical data ... 73
Fronius Reserva Pro 12.0 ... 73
Fronius Reserva Pro 16.0 ... 74
Fronius Reserva Pro 20.0 ... 75
Fronius Reserva Pro 24.0 ... 76
Fronius Reserva Pro 28.0 ... 78
Fronius Reserva Pro 32.0 ... 79
Explanation of footnotes ... 80

Dimensions **81**

Fronius Reserva Pro ... 82

General information

Safety information

Explanation of warnings and safety instructions

The warnings and safety instructions in these instructions are intended to protect people from possible injury and the product from damage.

⚠ DANGER!

Indicates an immediately dangerous situation
Serious injury or death will result if appropriate precautions are not taken.
▶ Action step to escape the situation

⚠ WARNING!

Indicates a potentially dangerous situation
Death or serious injury may result if appropriate precautions are not taken.
▶ Action step to escape the situation

⚠ CAUTION!

Indicates a potentially dangerous situation
Minor or moderate injury may result if appropriate precautions are not taken.
▶ Action step to escape the situation

NOTE!

Indicates impaired work results and/or damage to the device and components

The warnings and safety instructions are an integral part of these instructions and must always be observed to ensure the safe and proper use of the product.

Safety instructions and important information

The device has been manufactured in line with the state of the art and according to recognized safety standards.

⚠ WARNING!

Incorrect operation or misuse
Serious to fatal injuries to the operator or third parties as well as damage to the device and other property of the operator may result.
▶ All persons involved in the commissioning, maintenance, and servicing of the device must be appropriately qualified and have knowledge of working with electrical installations.
▶ Read these operating instructions in full and follow them carefully and precisely.
▶ The operating instructions must always be kept to hand wherever the device is being used.

IMPORTANT!
In addition to the operating instructions, observe the following general and local rules:
- Accident prevention
- Fire protection
- Environmental protection

IMPORTANT!
Labels, warning notices, and safety symbols are located on the device. A description can be found in these operating instructions.

IMPORTANT!

All safety and danger notices on the device:
- Must be kept in a legible state
- Must not be damaged/marked
- Must not be removed
- Must not be covered, have anything stuck on them, or painted over

⚠ WARNING!

Tampered-with and non-functioning protection devices
Serious to fatal injuries as well as damage to the device and other property of the operator may result.
- ▶ Never bypass or disable protection devices.
- ▶ Any protection devices that are not fully functional must be repaired by an authorized specialist before the device is switched on.

⚠ WARNING!

Loose, damaged, or under-dimensioned cables
An electric shock can be fatal.
- ▶ Use undamaged, insulated, and adequately dimensioned cables.
- ▶ Fasten the cables according to the specifications in the operating instructions.
- ▶ Loose, damaged, or under-dimensioned cables must be repaired or replaced immediately by an authorized specialist.

NOTE!

Installations or modifications to the device
The device may be damaged
- ▶ Do not carry out any alterations, installations, or modifications to the device without first obtaining the manufacturer's permission.
- ▶ Damaged components must be replaced.
- ▶ Only use original spare parts.

Battery hazard

Electrolyte leakage
- Do not expose the battery to strong shocks/vibrations.
- Do not deform or pierce the battery.
- Do not open or damage the battery.
- Creation of an explosive atmosphere.

Fire
- Short circuits at voltage-carrying parts of the battery, e.g., connection terminals.
- Do not expose the battery to direct sunlight.
- Keep the battery away from fire sources as well as flammable, explosive, and chemical materials.
- Do not place the battery into a fire.

Electric shock
- Contact with live parts such as connection terminals.
- Do not touch the battery with wet hands.
- Keep the battery out of reach of children and animals.
- A battery may pose a risk of electric shock and burns due to a high short circuit current.
- Risk of electric shock from batteries that are submerged in water.

Damage
- Do not immerse the battery in water.
- Risk of mechanical deformation due to load from foreign bodies.
- Do not step on or apply a load to the battery.

Recommended measures in case of emergencies

Electrolyte leakage
- Initiate rescue measures, alert and instruct emergency services.
- Contact with skin: Wash thoroughly with soap and water.
- Contact with eyes: Rinse eyes under clear running water for 15 minutes.
- Contact with respiratory tract: Leave the contaminated area immediately and ensure a supply of fresh air.
- If swallowed, do not induce vomiting. Vomiting can cause severe burns in the mouth, esophagus, and gastrointestinal tract.
- Immediately seek medical assistance after first aid measures have been taken.
- Only remove/dispose of leaked electrolyte with suitable protective equipment in accordance with the applicable specifications and guidelines.
- Supply the danger area with sufficient fresh air.

Fire
Battery can ignite if heated above 150°C. The following measures must be taken if this occurs:
- Initiate rescue measures, alert and instruct emergency services.
- If the battery catches fire during operation, switch off the DC disconnector of the battery, unless there is a direct danger.
- Use a fire extinguisher in accordance with the applicable national regulations.

Electric shock
- Initiate rescue measures, alert and instruct emergency services.
- Disconnect the PV system and battery from the power supply, provided there is no immediate danger.
- Do not touch the battery if it is wet or submerged in water. Leave the danger zone immediately, alert the emergency services if there is water damage to the battery and contact customer service or the distributor for technical assistance.
- Battery installation and cable connections must be carried out by qualified specialists.

Damage

- Damaged batteries are dangerous and must be handled with extreme caution. They must not be used and may pose a danger to people and/or property. If the battery is damaged, immediately switch off the battery's DC disconnector, contact the distributor to arrange repair or return.

EMC measures

In certain cases, even though a device complies with the standard limit values for emissions, it may affect the application area for which it was designed (e.g., when there is equipment that is susceptible to interference at the same location or if the site where the device is installed is close to either radio or television receivers). If this is the case, the operator is obliged to take action to rectify the situation.

Electromagnetic fields

During operation, due to the high electrical voltages and currents, local electromagnetic fields (EMF) occur in the environment around the inverter and the Fronius system components as well as in the area of the PV modules including the supply lines.

In the case of exposure to humans, the required limit values are observed when the products are used in line with the intended use and the recommended distance of at least 20 cm is observed.

If these limit values are complied with, according to current scientific knowledge, no health-endangering effects from EMF exposure are to be expected. If wearers of prostheses (implants, metal parts in and on the body) as well as active physical aids (pacemakers, insulin pumps, hearing aids, etc.) are in the vicinity of components of the PV system, they must consult with the responsible doctor regarding possible health risks.

Protective earthing (PE), functional grounding

The connection of a defined point in the device, system, or installation to earth serves either to protect against electric shock in the event of a fault (protective earthing) or to ensure a defined electrical potential for operation (functional grounding).
When installing a battery system, a ground conductor connection is required depending on the safety class (see Technical data).

When connecting the ground conductor, ensure that it is secured against unintentional disconnection. All of the points listed in the chapter headed Connecting the ground conductor (PE) on page 36 must be observed. When using cable glands, make sure the ground conductor will be the last conductor subjected to mechanical stress in the event of a cable gland failure. The respective national standards and regulations and requirements for minimum cross-section must be observed when connecting the ground conductor.

General

Information on the device

IMPORTANT!
Technical data, markings, warnings, and safety symbols are applied to the battery. This information must be kept in a legible condition and must not be removed, covered, painted over, or concealed by stickers or labels. The information and symbols warn against incorrect operation, which may result in serious injury and property damage.

Rating plate / warning notice on the battery management system

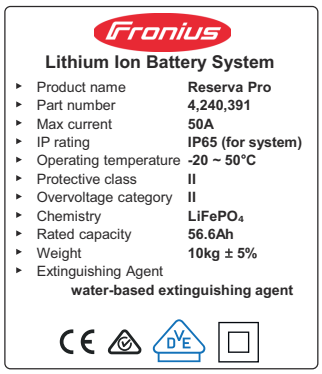

Manufacturer Information	
Name	Fronius International GmbH
Registered trade mark	Fronius
Postal address	Froniusstraße 1, 4643 Pettenbach, Austria
Single contact point	contact@fronius.com
E-Mail address	support@fronius.com
Web address	www.Fronius.com

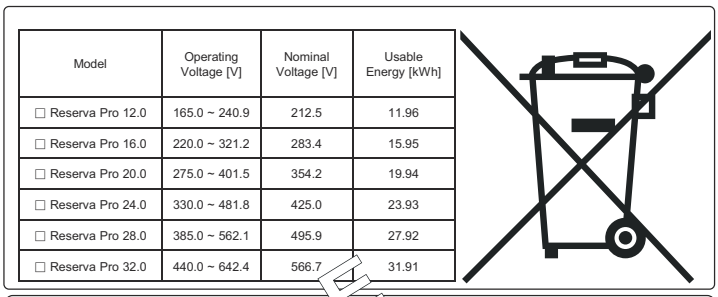

Model	Operating Voltage [V]	Nominal Voltage [V]	Usable Energy [kWh]
☐ Reserva Pro 12.0	165.0 ~ 240.9	212.5	11.96
☐ Reserva Pro 16.0	220.0 ~ 321.2	283.4	15.95
☐ Reserva Pro 20.0	275.0 ~ 401.5	354.2	19.94
☐ Reserva Pro 24.0	330.0 ~ 481.8	425.0	23.93
☐ Reserva Pro 28.0	385.0 ~ 562.1	495.9	27.92
☐ Reserva Pro 32.0	440.0 ~ 642.4	566.7	31.91

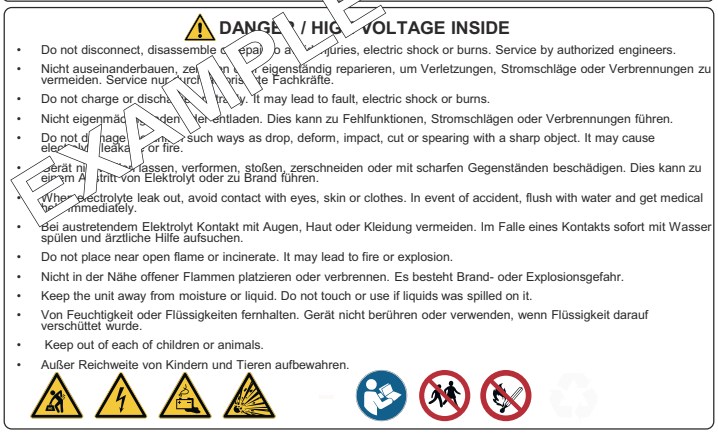

Rating plate / warning notice on the battery module



Manufacturer Information	
Name	Fronius International GmbH
Registered trade mark	Fronius
Postal address	Froniusstraße 1, 4643 Pettenbach, Austria
Single contact point	contact@fronius.com
Web address	www.fronius.com
E-Mail address	support@fronius.com

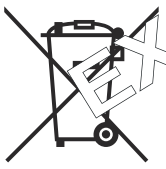

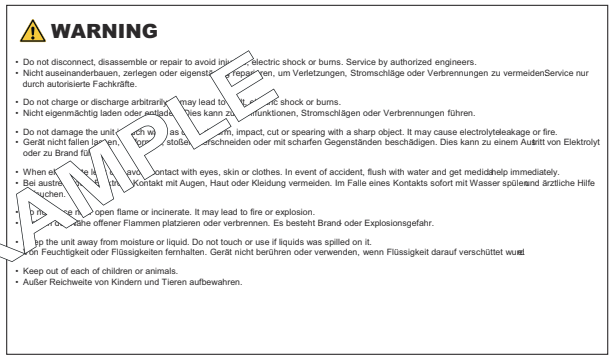

Explanation of symbols

CE	CE label – confirms compliance with applicable EU directives and regulations.
RCM	RCM marking – tested according to the requirements of Australia and New Zealand.

EXAMPLE

Explanation of symbols	
	VDE marking – tested according to the requirements of the Association of Electrical, Electronic and Information Technology (VDE).
	Safety class 2 marking – identifies electrical devices that belong to safety class 2 and have reinforced or double insulation.
	Separate collection – Battery Regulation 2023/1542/EU – batteries must be collected separately in accordance with the EU regulation and handed over to waste management for environmentally sound disposal or recycling.
	Recyclable – the product is recyclable or made from recycled materials.
	Do not reverse polarities
	General Warning Sign
	Warning: Electric voltage
	Warning: Heavy load
	Warning: Hazards due to the charging of batteries
	Warning: Explosive substances
	Follow the operating instructions
	Keep out of reach of children and animals
	No open flame; fire, open source of ignition, and smoking prohibited

Battery code	Description
IFpP	Type of battery (e.g., lithium iron phosphate)
17/102/354	Battery dimensions [mm]
[1P22S]	Number of cells in series (22 cells in series)

How information is presented in the document

The conventions regarding how information is presented in the document, which are set out below, have been defined in order to increase the readability and comprehensibility of the document.

Application notes

IMPORTANT! Indicates application notes and other useful information. It does not indicate a harmful or dangerous situation.

Software

Software functions and elements of a graphical user interface (e.g., buttons, menu items) are highlighted in the text with this **mark up**.

Example: Click **Save**.

Instructions for action

1 Action steps are displayed with consecutive numbering.

✓ *This symbol indicates the result of the action step or the entire instruction.*

Target group

This document provides detailed information and instructions to ensure that all users can use the device safely and efficiently.

- The information is intended for the following groups of people:
  - **Technical specialists:** People with appropriate qualifications and fundamental electronic and mechanical knowledge, who are responsible for the installation, operation, and maintenance of the device.
  - **End users:** People that use the device in daily operation and want to understand its basic functions.
- Regardless of any qualifications, only perform the activities listed in this document.
- All persons involved in the commissioning, maintenance, and servicing of the device must be appropriately qualified and have knowledge of working with electrical installations.
- The definition of professional qualifications and their applicability are subject to national law.

Data security

With regard to data security, the user is responsible for:

- Backing up any changes made to the factory settings
- Saving and storing personal settings

NOTE!

Data security for network and Internet connection

Unsecured networks and a lack of safeguards can result in data loss and unauthorized access. Observe the following points for safe operation:

- ▶ Operate inverters and system components on a private, secure network. A WiFi network is considered secure if security standard WPA 2 is satisfied as a minimum.
- ▶ Keep the network devices (e.g., WiFi routers) up to date with the latest technology.
- ▶ Keep the software and/or firmware updated.
- ▶ Use a wired network to ensure a stable data connection.
- ▶ For security reasons, do not make inverters and system components accessible from the Internet via port forwarding or Port Address Translation (PAT).
- ▶ Use the solutions provided by Fronius for monitoring and remote configuration.
- ▶ The optional communication protocol Modbus TCP/IP[1)] is an unsecured interface. Only use Modbus TCP/IP if no other secured data communication protocol (MQTT[2)]) is possible (e.g., compatibility with older Smart Meters).

[1)] TCP/IP - Transmission Control Protocol/Internet Protocol

[2)] MQTT - Message Queuing Telemetry Protocol

Copyright

Copyright of these operating instructions remains with the manufacturer.

Text and illustrations were accurate at the time of printing, subject to change.
We are grateful for suggestions for improvement and information on any discrepancies in the operating instructions.

Fronius Reserva Pro

Device concept

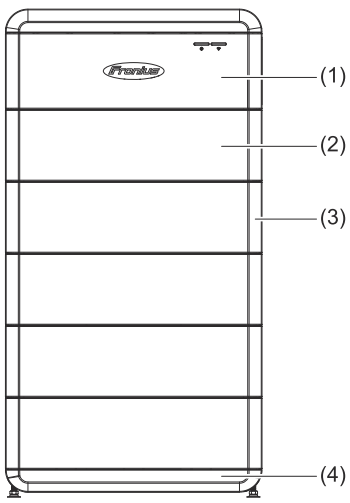

(1) Battery management system (BMS)
(2) Battery module
(3) Cover
(4) Base plate

The Fronius Reserva Pro battery is a stackable battery system in which a maximum of 4 battery systems can be operated in parallel. Lithium iron phosphate (LFP) batteries are known for their high thermal and chemical stability. The multi-level safety design and intelligent safety monitoring systems ensure safe operation throughout the total life cycle of the batteries.

The Fronius Reserva Pro can be used as a backup power supply when used in combination with a Fronius inverter with backup power capability and backup power changeover with the appropriate configuration.

Function overview

Function	Description
SoC calculation	The current state of charge (SoC) is calculated and displayed in Fronius Solar.web. SoC calibration is carried out every month to ensure the accuracy of the battery system's SoC calculation.
Automatic SoC Balancing	The "Automatic SoC Balancing" function (2% per day) compensates for charge status deviations between Reserva Pro modules that can occur when Reserva modules are replaced/added. This function is disabled in normal operation.
Safety	The battery monitors and protects itself against defective operating behavior: - Overvoltage and undervoltage - Overcurrent - Excessively high or low temperatures - Cell and hardware errors
Dark start	The battery supplies energy for the manual system start (dark start) and the inverter automatically starts backup power mode.
Update	The battery firmware is updated via the inverter's user interface.

Function	Description
Capacity	3 - 8 Reserva Pro modules per battery system and max. 4 battery systems with the same capacity in parallel operation.
Monitoring	Operating data and status indicators are transmitted to the inverter for monitoring via the RS485 interface.

Scope of supply

Reserva module

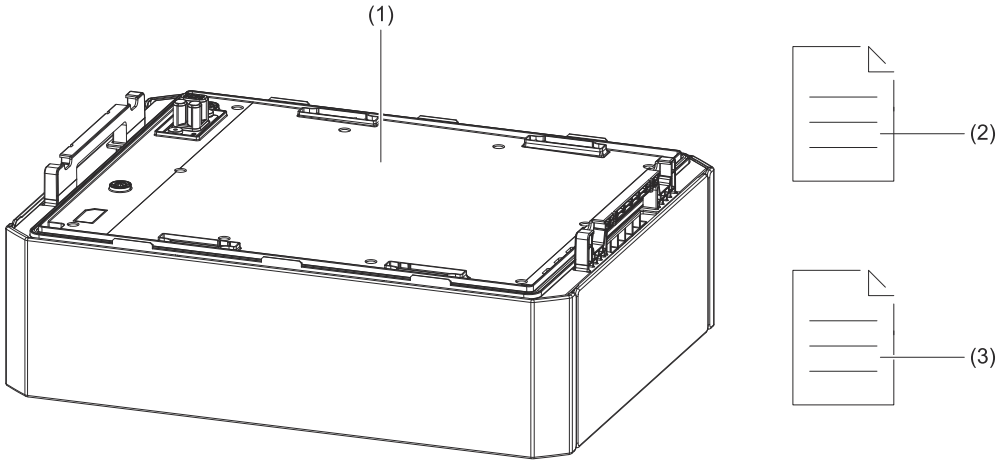

No.	Designation	Quantity
(1)	Battery module	1
(2)	User information	1
(3)	Quick Start Guide	1

Reserva BMS

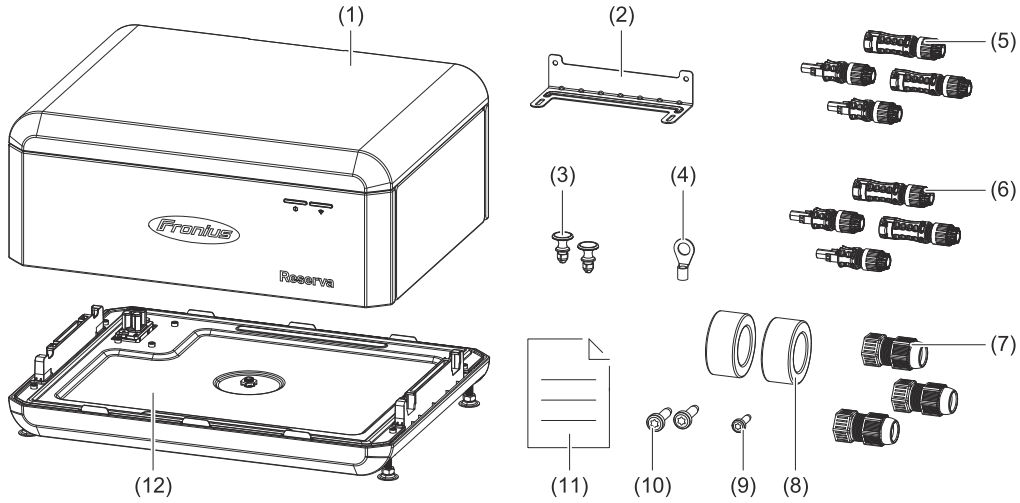

No.	Designation	Quantity
(1)	Battery management system (BMS)	1
(2)	L-shaped mounting bracket	1

No.	Designation	Quantity
(3)	Fastening clip	2
(4)	Cable lug	1
(5)	Stäubli MC4 EVO STO 6 mm^2 (+/-)	4
(6)	Stäubli MC4 EVO STO 10 mm^2 (+/-)	4
(7)	RJ45 screw connection	3
(8)	Ferrite ring	2
(9)	M4x10 TX 20 screw	1
(10)	M5x10 TX 20 screw	2
(11)	Quick Start Guide	1
(12)	Base plate	1

Storage

Max. storage period	Temperature range	Relative humidity	SoC*
7 days	-30 °C to -20 °C 45 °C bis 60 °C	5% - 95%	15%
12 months	-20 °C to 45 °C	5% - 95%	15%
* SoC at the time of storage.			

Observe the following storage conditions if batteries have not been used **for more than 7 days**:
- Store according to the instructions on the packaging and do not turn upside down.
- Store protected from direct sunlight and precipitation.
- Maintain a minimum distance of 2 meters from heat sources (e.g., radiators).
- Avoid contact with corrosive and organic substances (including gas).
- Store faulty batteries separately from intact batteries (e.g., structural partition or different fire protection zones).
- The storage area should be dry, clean, and well ventilated.

Observe the following if batteries have not been used **for more than 6 months**:
- Batteries must be recharged by the manufacturer. The batteries must be sent to the manufacturer for this purpose.

Intended use

The Fronius Reserva Pro battery is designed for storing electrical energy from photovoltaic systems. It is used to store surplus energy and release this again as necessary, in order to optimize the energy supply and maximize the self-consumption of solar energy. The battery is designed for use in private households and for small to medium-sized commercial applications.

The Fronius Reserva Pro can be used as a backup power supply in combination with a Fronius inverter with backup power capability and backup power changeover.

Foreseeable misuse

The following circumstances are considered to be reasonably foreseeable misuse:

- Any use that is not the intended use or goes beyond the intended use.
- The use of incompatible chargers.
- Improper handling, such as dropping or exposing to strong vibrations.
- Backup power mode without suitable changeover devices.
- Modification or manipulation of the battery system that is not expressly recommended by Fronius.
- The supply of loads that require an uninterruptible power supply (e.g., IT networks, life-sustaining medical devices).
- Parallel operation with battery systems of different capacities.

Different operating modes

Operating modes – Explanation of symbols

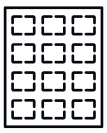

PV module
generates direct current



Fronius hybrid inverter
converts direct current into alternating current and charges the battery (battery charging requires battery support).



Battery
is coupled to the inverter on the direct current side and stores electrical energy.



Primary meter
records the load curve of the system and makes the measured data available for energy profiling in Fronius Solar.web. The primary meter also controls the dynamic power of feeding in.



Loads in the system
are the loads connected in the system.



Grid
supplies the loads in the system if insufficient power is being generated by the PV modules or supplied by the battery.

Operating mode – Solar energy

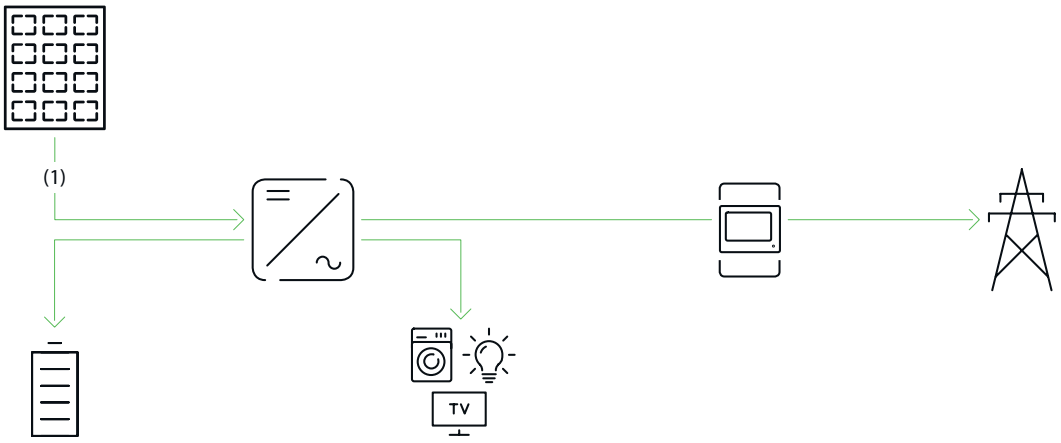

(1) The solar energy generated supplies the loads in the house, the battery is charged with solar energy and the surplus energy production is fed into the public grid.

Operating mode – Self-consumption optimization

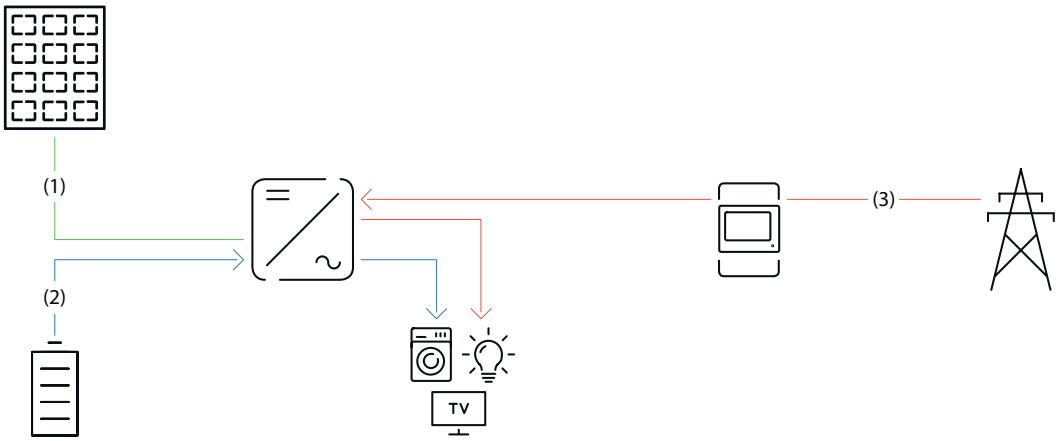

(1) There is no solar energy available from the PV modules.
(2) The loads in the house are supplied with energy from the battery.
(3) The loads in the house are supplied with energy from the public grid if the energy from the battery is insufficient.

Operating mode – Backup power

IMPORTANT!
Appropriate installation and configuration is a prerequisite for the backup power operating mode.

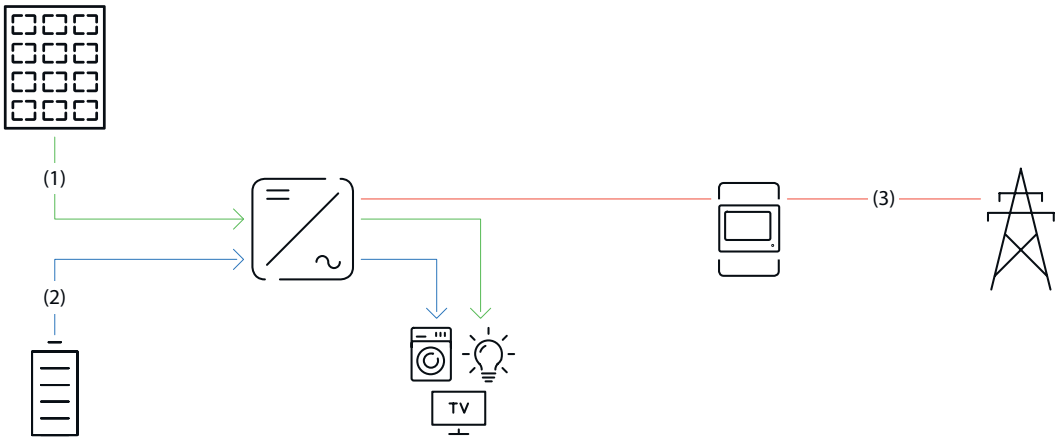

(1) The loads in the house are supplied with solar energy from the PV modules.
(2) The loads in the house are supplied with energy from the battery if the solar energy from the PV modules is insufficient.
(3) There is no energy available from the public grid.

Operating mode – Cost-optimized battery charging from the public grid

Requirements
- Flexible electricity tariff
- The “Energy Cost Assistant” function in Fronius Solar.web must be activated.
- The restrictions of the grid operator must be taken into account.

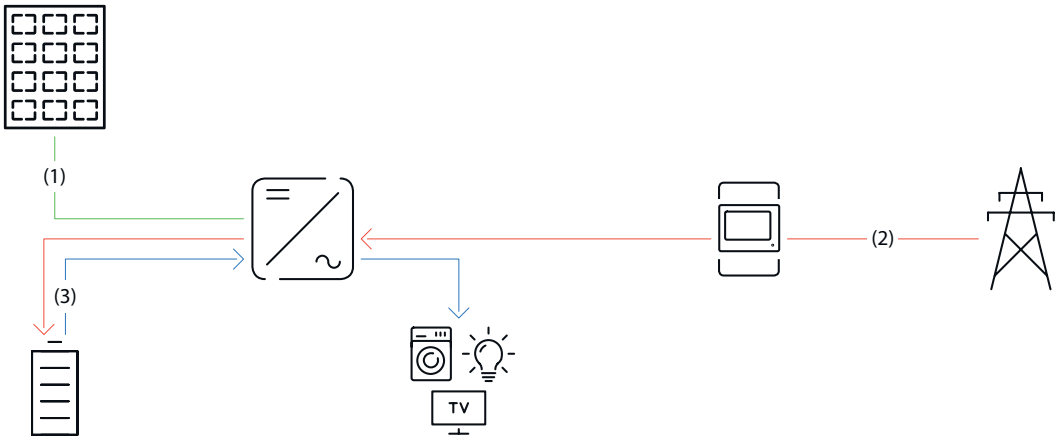

(1) There is no solar energy available from the PV modules.
(2) The battery is charged using energy from the public grid at a low electricity price.
(3) The loads in the house are supplied with energy from the battery.

Energy flow direction of the inverter

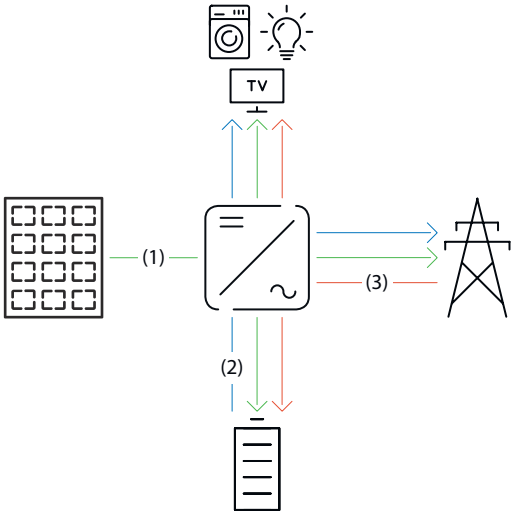

(1) PV module – inverter – load/grid/battery
(2) Battery – inverter – load/grid*
(3) Grid – inverter – load/battery*

* Charging the battery from the grid depends on the settings, as well as the local standards and directives.

Operating states (for battery systems only)

Battery systems distinguish between different operating states. In each case, the relevant current operating state is displayed on the user interface of the inverter or in Solar.web.

Operating state	Description
Normal operation	Energy is stored or drawn, as required.
Min. state of charge (SoC) reached	The battery has reached the minimum SoC specified by the manufacturer or the set minimum SoC. The battery cannot be further discharged.
Energy saving mode (standby)	The system has been put into energy saving mode. Energy saving mode is automatically ended as soon as sufficient surplus power is available again.

Operating state	Description
Start	The battery system starts from energy saving mode (standby).
Forced re-charging	The inverter re-charges the battery, in order to maintain the minimum SoC specified by the manufacturer or the set minimum SoC (protection against deep discharge).
Calibration charging	The battery system is charged to 100% SoC. After reaching 100% SoC, calibration charging is terminated and the battery switches to normal operation.
Service mode	The battery system is charged or discharged to 15% SoC and 15% SoC is maintained until the end of service mode.
Disabled	The battery is not active. Either it has been disabled or switched off, or communication between the battery and inverter has been interrupted.

Operating controls and connections

Connection area

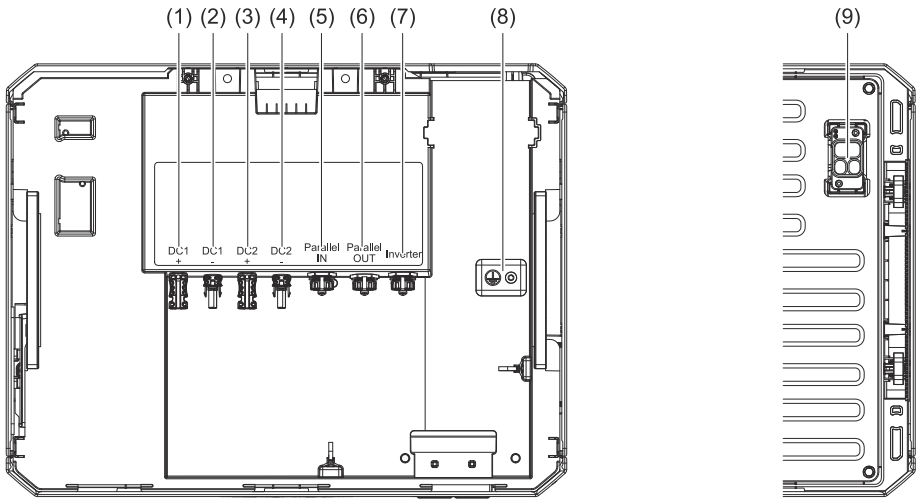

No.	Designation	Description
(1)	DC1+	Positive pole for the DC connection to the inverter
(2)	DC1-	Negative pole for the DC connection to the inverter
(3)	DC2+	Positive pole for the DC connection to the battery in parallel operation
(4)	DC2-	Negative pole for the DC connection to the battery in parallel operation
(5)	Parallel IN	Data communication input between batteries in parallel operation
(6)	Parallel OUT	Data communication output between batteries in parallel operation
(7)	INVERTER	Data communication connection to the inverter
(8)	⏚	PE ground conductor connection
(9)	HVB plug connector	High-voltage battery (HVB) and data communication plug connector

Operating controls

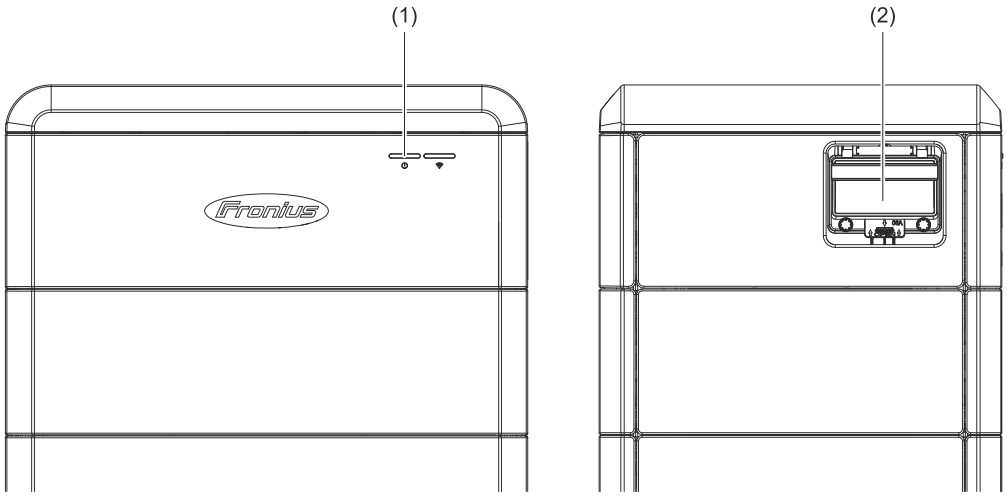

No.	Designation	Description
(1)	LED status indicator	Displays the battery status.
(2)	DC disconnector	Interrupts the current flow between the battery and inverter. A manual battery start (dark start) is performed automatically when the switch is set to "On".

LED status indicator

LED status indicator	
	The battery is starting up or a firmware update is underway. ⏻ Flashes green Flashes blue
	The battery is checking the application mode (parallel or single application mode) or the battery is in standby mode. ⏻ Flashes green
	The application mode check (parallel or single application mode) was performed successfully. ⏻ Lights up green
	The battery displays a non-critical status. ⏻ Flashes red
	The battery displays a critical status. ⏻ Lights up red
	The battery firmware update failed. ⏻ Lights up green Flashes red

LED status indicator	
	The data connection to the inverter has been established. ⏻ Lights up green Flashes blue
	The battery is working faultlessly and the data connection to the inverter is active. ⏻ Lights up green Lights up blue
	The data connection to the inverter is interrupted. ⏻ Lights up green Lights up red

Installation

General

System component compatibility

All installed components in the PV system must be compatible with each other and have the necessary configuration options. The installed components must not restrict or negatively affect the functioning of the PV system.

NOTE!

Risk due to components in the PV system that are not and/or only partially compatible.
Incompatible components can restrict and/or negatively affect the operation and/or functioning of the PV system.

- ▶ Only install components recommended by the manufacturer in the PV system.
- ▶ Before installation, check the compatibility of components that have not been expressly recommended with the manufacturer.

Choosing the Location

Selecting the battery location

IMPORTANT!
The installation location must be chosen such that all operating controls are easily accessible and simple to operate. The battery must not be covered or installed in enclosures.

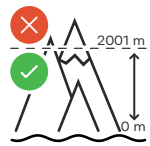

The battery must not be installed or operated at more than 2000 m above sea level.

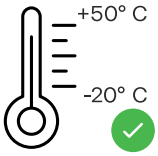

Max. ambient temperature range: -20 °C to +50 °C

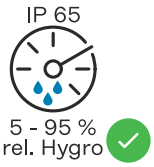

Relative humidity: 5 to 95%



The battery is suitable for indoor installation.



The battery is suitable for installation in protected outdoor areas (e.g., under an overhanging roof).



In order to keep battery heating as low as possible, do not expose the battery to direct sunlight.



The battery is not suitable for installation in unprotected outdoor areas.



The battery is dust-proof and protected against water spray from all directions due to its IP65 protection class. The battery is not fully waterproof and must not be immersed in water.



Do not install the battery close to sources of fire or near to flammable, explosive or chemical materials.

Battery location requirements

IMPORTANT!
The battery system must be installed on a sufficiently load-bearing and non-combustible surface (e.g., brick or concrete wall). Installation sites for battery storage systems must be effectively ventilated to the outside if the indoor space does not guarantee sufficient ventilation.

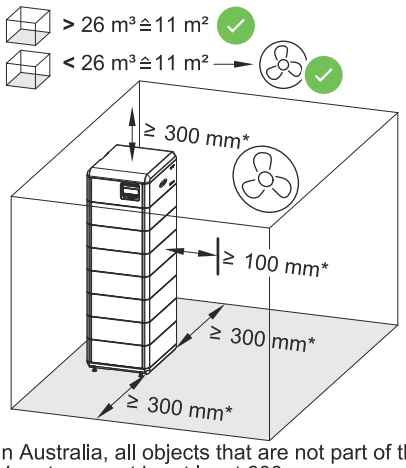

* In Australia, all objects that are not part of the PV system must be at least 600 mm away from the battery.

A minimum clearance of 300 mm is recommended on the left and right sides of the battery.

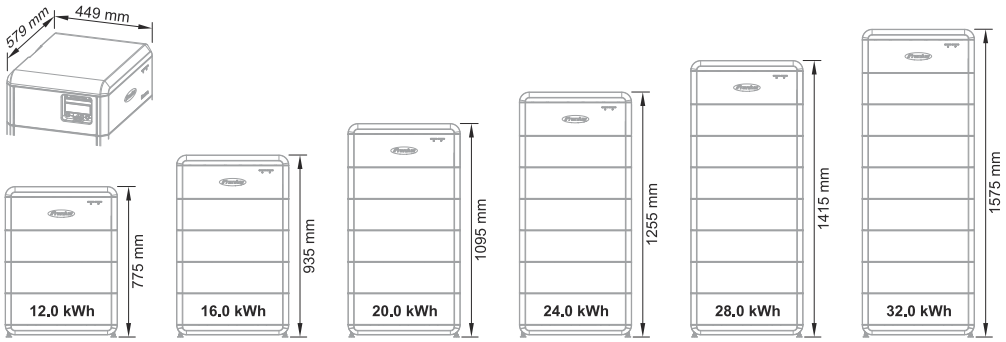

For detailed information regarding the battery dimensions, see chapter Dimensions on page 81.

Installation

Battery design

⚠ WARNING!

Danger of electric shock from live HVB plug connectors.
This can result in severe personal injury and damage to property.
- ▶ Use the integrated carrying handles for lifting the battery and setting it down.
- ▶ Wear personal protective equipment.
- ▶ Remove conductive objects such as watches, bracelets, and rings.

⚠ WARNING!

Danger due to soiled battery connections.
This can result in severe personal injury and damage to property.
- ▶ Protect the battery connections from dirt.
- ▶ Check the battery connections for soiling.
- ▶ Always use personal protective equipment (insulated gloves, safety goggles, protective clothing) when cleaning soiled battery connections and remove soiling with a lint-free cloth without the use of cleaning agents.

⚠ CAUTION!

Danger due to improper battery transportation or installation.
This can result in injuries.
- ▶ Lifting and lowering should be performed by at least 2 people.
- ▶ Use the integrated carrying handles.
- ▶ When lowering the battery, make sure that limbs do not come between the battery and the fixtures.
- ▶ Wear personal protective equipment.

1

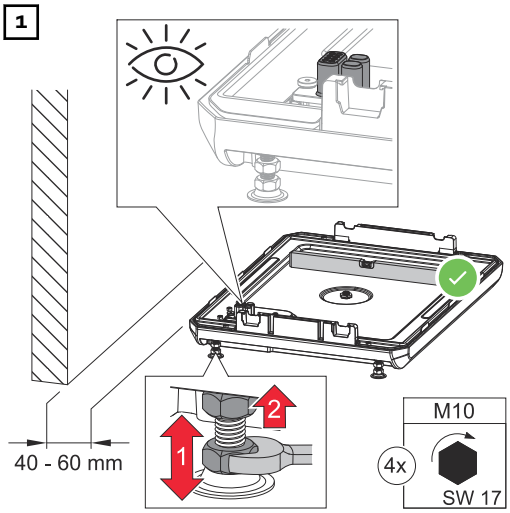

Position the base plate parallel to the wall at a distance of 40 - 60 mm and align it horizontally by turning the adjustable feet with a flat spanner (17 mm).

2

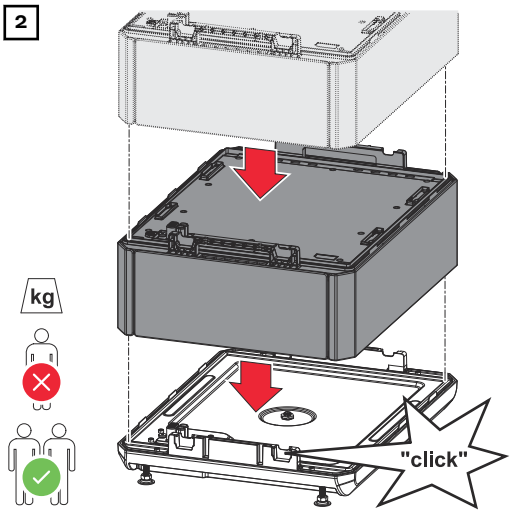

Arrange the Reserva Pro modules in parallel and press into place until the modules engage on both sides with an audible click.

3

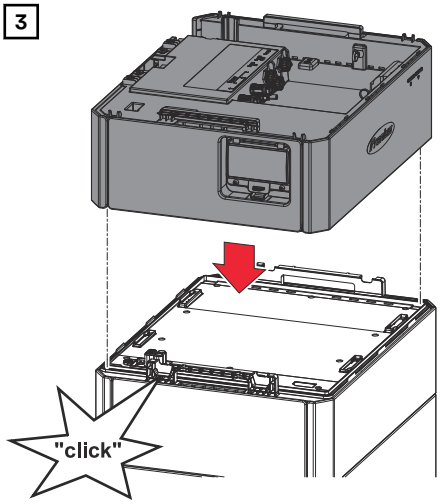

Arrange the Reserva Pro BMS in parallel on the last Reserva Pro module and press into place until the BMS engages on both sides with an audible click.

Requirements for connection

Various cable types

Solid	Multi-stranded	Fine-stranded
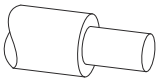	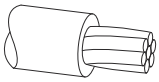	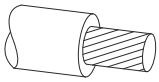

Permitted cables for the electrical connection

IMPORTANT!
The cables used must comply with nationally applicable standards and directives.

Round copper conductors can be connected to the terminals as described below:

DC connections				
Manufacturer	Ø insulation layer	Stripping length	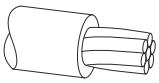	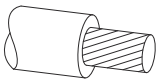
Stäubli MC4 EVO STO 6 mm^2	4.7-6.4 mm	7 mm	6 mm^2	6 mm^2
Stäubli MC4 EVO STO 10 mm^2	6.4-8.5 mm	7 mm	10 mm^2	10 mm^2

PE ground conductor connection (ring cable lug)					
Material	Ø bore	Torque	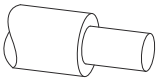	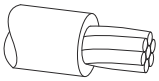	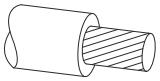
Copper with tin coating	4 mm	3 Nm	2.5 - 6 mm^2	2.5 - 6 mm^2	2.5 - 6 mm^2

Permitted cables for the data communication connection

RJ45 connection			
Cable recom-mendation	Max. cable length	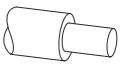	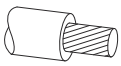
Min. CAT 5 STP (shielded twisted pair)	30 m	0.14 - 1.5 mm^2	0.14 - 1.5 mm^2

Electrical connection

Safety

⚠ WARNING!

Danger due to incorrect operation and incorrectly performed work.
This can result in serious injury and damage to property.
- ▶ Only a technical specialist is permitted to perform commissioning, maintenance, and service activities for inverters and batteries, and only within the scope of the technical regulations.
- ▶ Read the installation instructions and operating instructions from the respective manufacturer before installing and commissioning the equipment.

⚠ WARNING!

Danger from mains voltage and DC voltage from the PV module that are exposed to light, as well as batteries.
This can result in serious injury and damage to property.
- ▶ All connection, maintenance, and service work should only be carried out when the AC and DC sides have been disconnected from the inverter and battery, and are de-energized.
- ▶ Only a technical specialist is permitted to connect this equipment to the public grid.

⚠ WARNING!

Danger from damaged and/or contaminated terminals.
This can result in serious injury and damage to property.
- ▶ Prior to connection work, check the terminals for damage and contamination.
- ▶ Remove any contamination while the equipment is de-energized.
- ▶ Have defective terminals repaired by a technical specialist.

Switching off the power to the photovoltaic system

IMPORTANT!
Wait for the capacitors of the inverter to discharge.

1

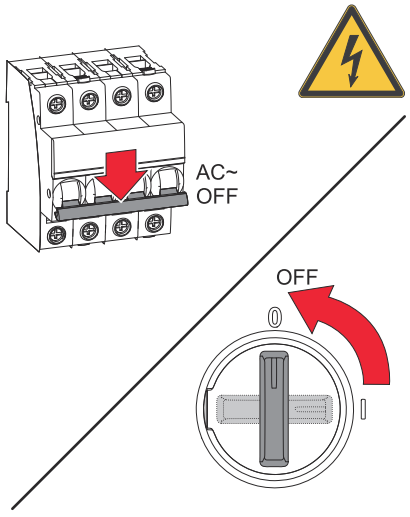

Turn off the automatic circuit breaker.
Set the switch position of the inverter's DC disconnector to "Off".

Connecting the ground conductor (PE)

IMPORTANT!
The cable lug and screw lock must be selected by a technical specialist.

1

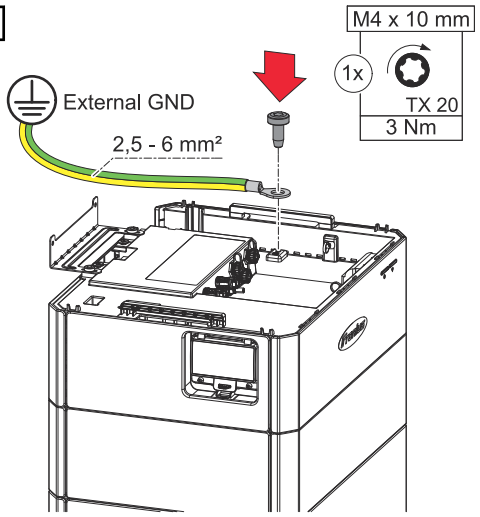

Fasten the ground conductor (PE) to the ground conductor connection using the M4x10 TX20 screw supplied and a torque of 3 Nm.

Connecting DC cables

⚠ WARNING!

Danger from loose and/or incorrectly clamped single conductors.
This can result in severe personal injury and damage to property.
- ▶ Check that the single conductors are secure in the crimp contacts.
- ▶ Ensure that the single conductor is fully in the crimp contact and that no individual strands are protruding.

IMPORTANT!
The maximum cable length between the inverter and battery is 40 m.

1

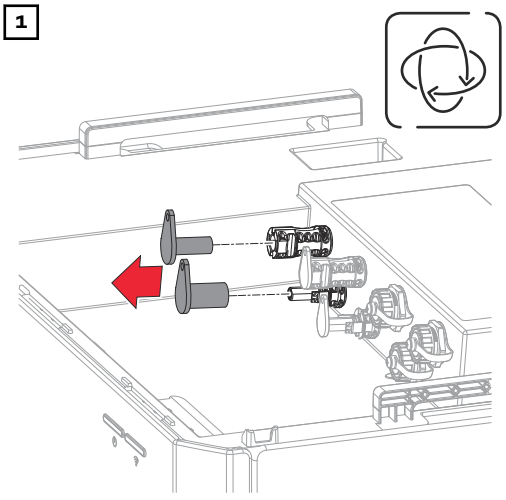

Remove the caps.

2

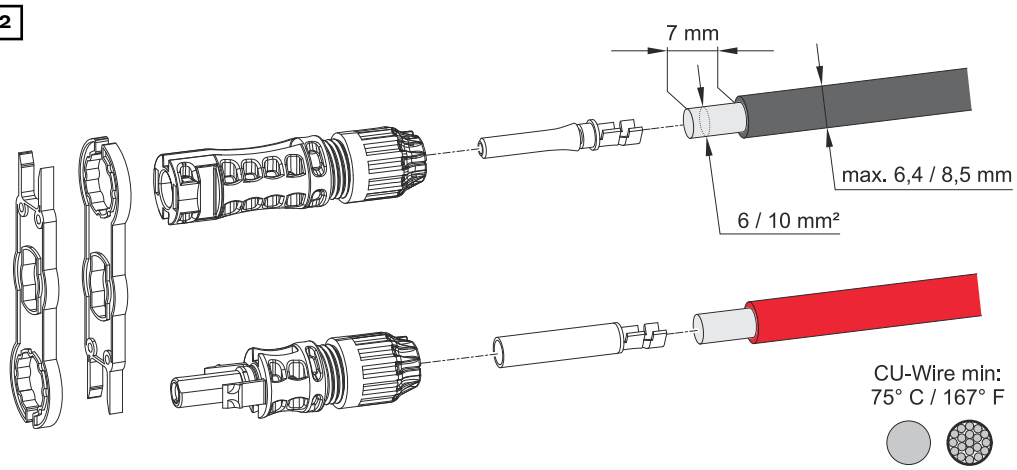

Select the cable cross-section according to the information in Permitted cables for the electrical connection on page 34. Strip 7 mm (0.27 inches) of insulation from the single conductors.

3

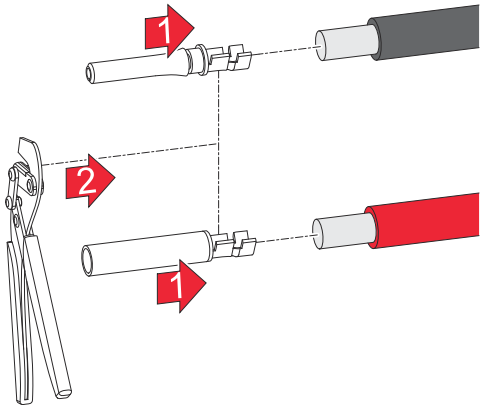

Attach the crimp contact to the individual conductors using a suitable crimping tool.

4

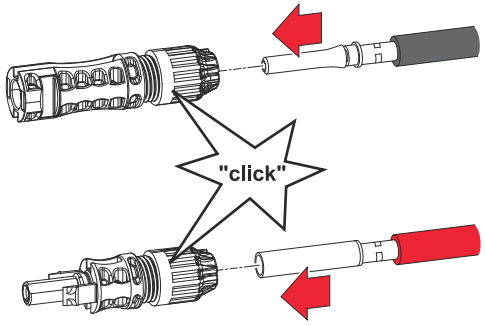

Push the crimp contact into the MC4 plug with an audible click.

5

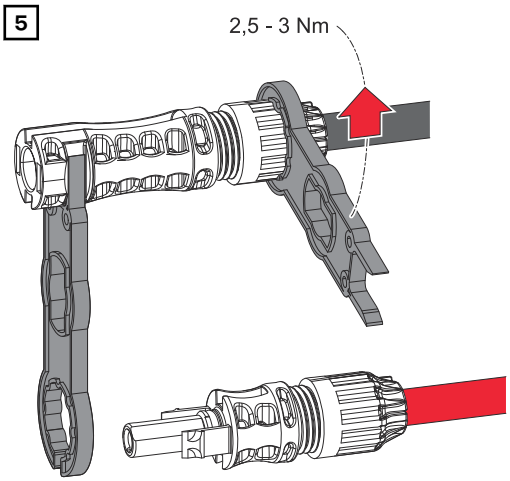

Tighten the cable glands with a torque of 2.5 Nm - 3 Nm.

IMPORTANT!
Full selectivity of the overcurrent protection devices is only guaranteed if they are installed correctly.

6

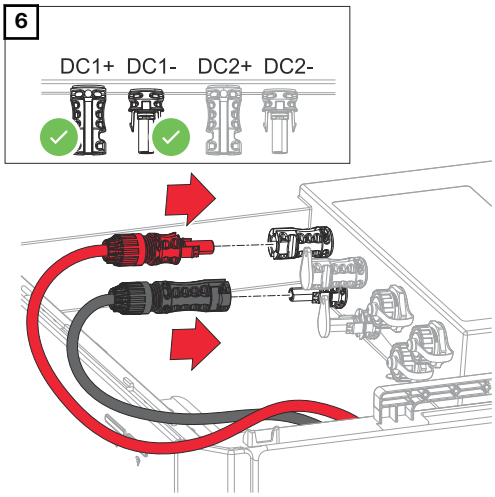

Push the MC4 plugs (+/-) into the DC1+/DC1- slots until they click into place.

Connecting DC cables for battery parallel operation

⚠ WARNING!

Danger from loose and/or incorrectly clamped single conductors.
This can result in severe personal injury and damage to property.
- ▶ Check that the single conductors are secure in the crimp contacts.
- ▶ Ensure that the single conductor is fully in the crimp contact and that no individual strands are protruding.

IMPORTANT!
The maximum cable length between the inverter and the last battery system is 40 m and the maximum cable length between the battery systems is 7 m. The cable lengths between the battery systems should be as short as possible and identical cable lengths should be used in order to avoid current differences between the battery systems.

1

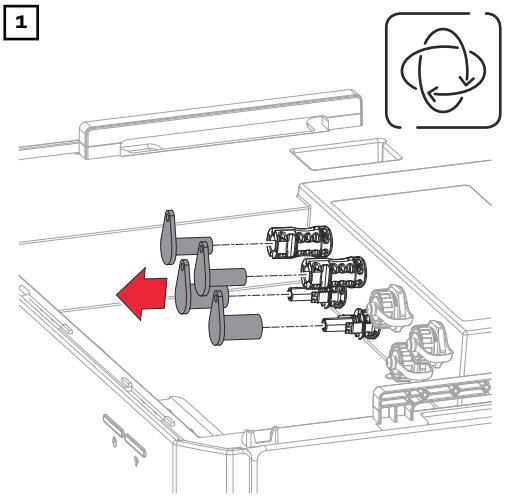

Remove the caps.

2

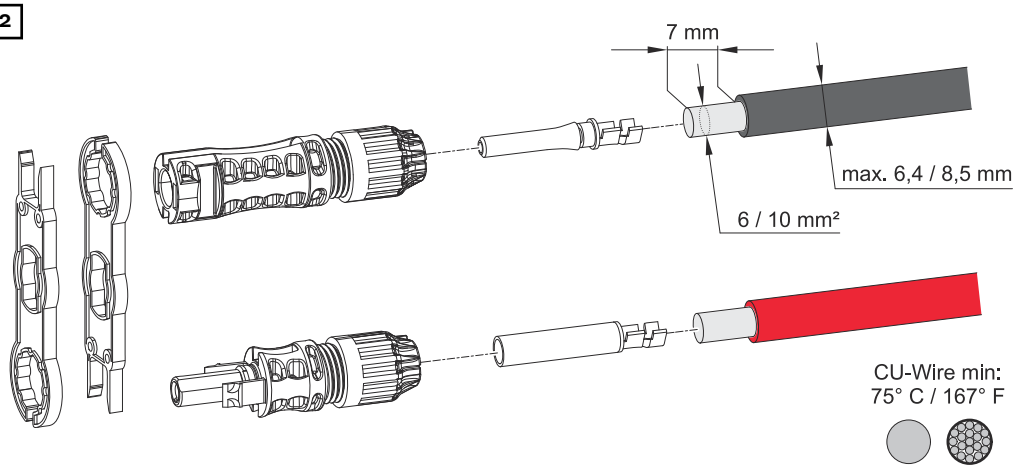

Select the cable cross-section according to the information in Permitted cables for the electrical connection on page 34. Strip 7 mm (0.27 inches) of insulation from the single conductors.

3

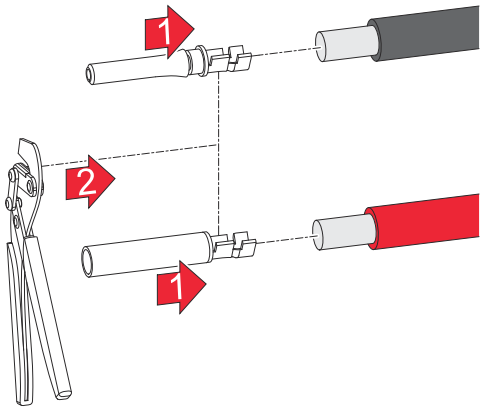

Attach the crimp contact to the individual conductors using a suitable crimping tool.

4

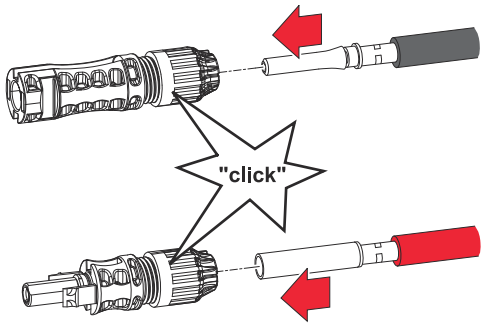

Push the crimp contact into the MC4 plug with an audible click.

5

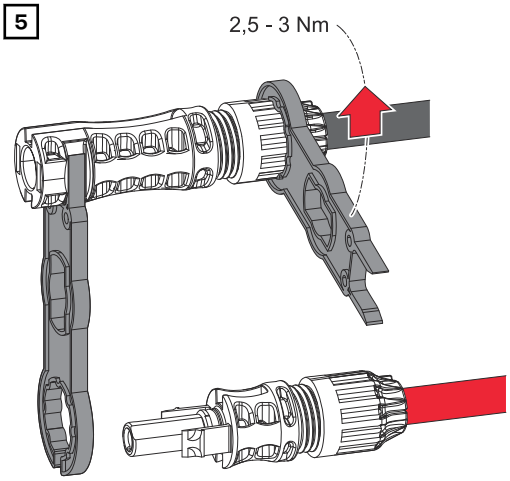

Tighten the cable glands with a torque of 2.5 Nm - 3 Nm.

IMPORTANT!
Full selectivity of the overcurrent protection devices is only guaranteed if they are installed correctly.

6

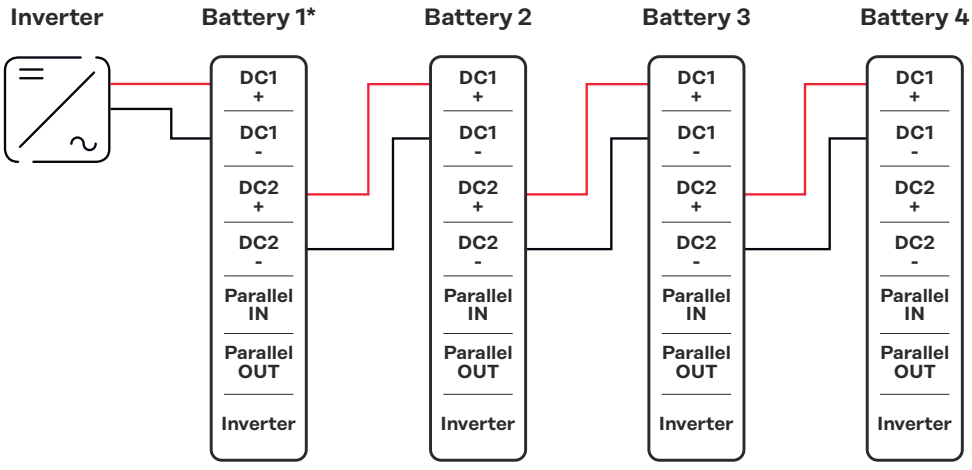

* Use only DC1+/- to connect battery 1 to inverter.

Push the MC4 plug (+/-) into the respective slot until it clicks into place.

Connecting the data communication cables

Data communication PIN assignment

Observe the following points when connecting the data communication cable.

- Use network cables of type CAT5 STP or higher.
- Use twisted pairs of cables for data cables that belong together.
- Use double-insulated or sheathed data cables if they are in the vicinity of bare conductors.
- Use shielded twisted pairs of cables to avoid interference.

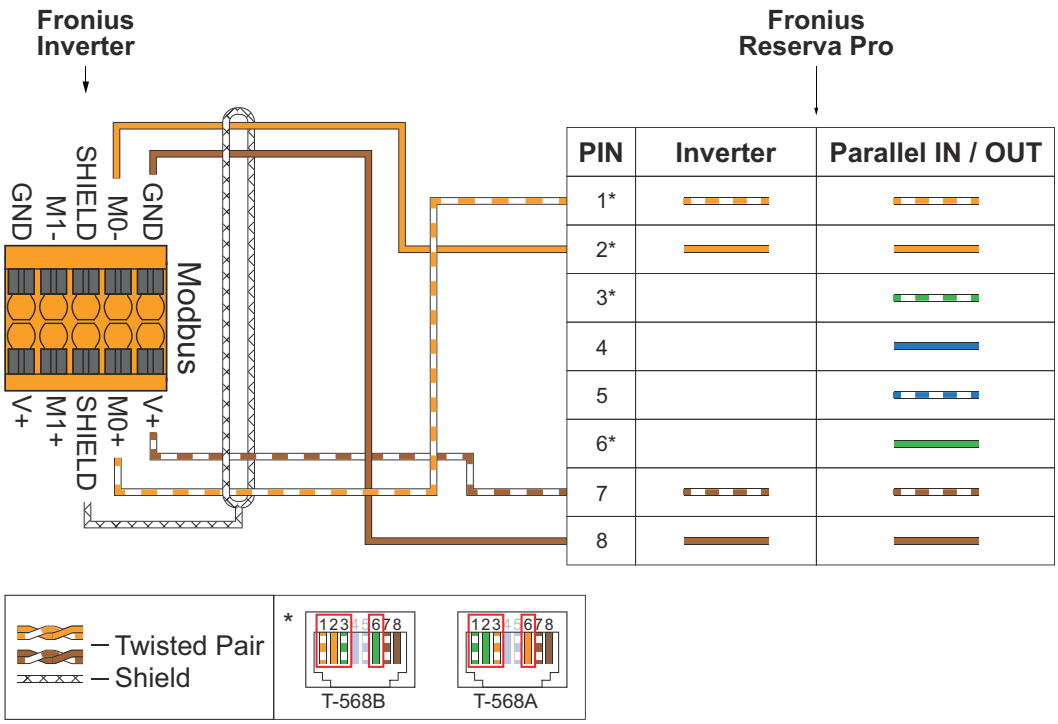

Optical-acoustic signal PIN assignment

Observe the following points when connecting an optical-acoustic signal.

- A suitable relay must be used to ensure an adequate power supply for the optical-acoustic signal used.
- An unassigned "Parallel OUT" data communication output is required for the connection.
- Use network cables of type CAT5 STP or higher.
- Use double-insulated or sheathed data cables if they are in the vicinity of bare conductors.
- Use shielded twisted pairs of cables to avoid interference.

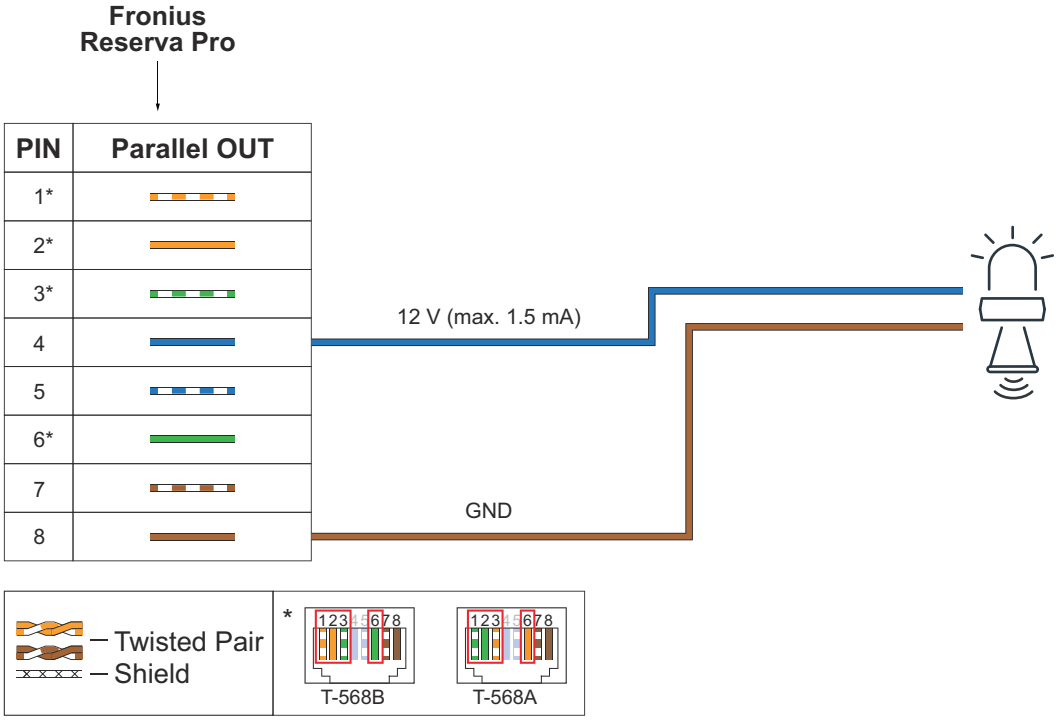

Connecting the data communication cable to the inverter

IMPORTANT!
It is not possible to guarantee effectiveness of the cable gland and IP65 protection class for the data communication connection if the connection is not established correctly.

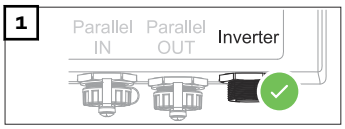

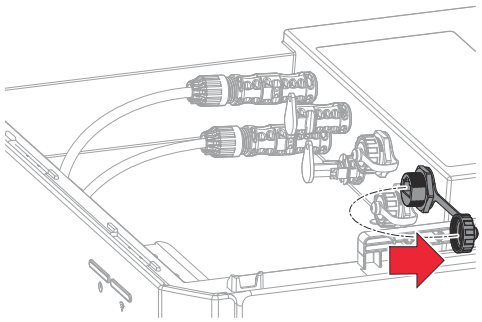

Unscrew the cap on the "Inverter" data communication connection.

2

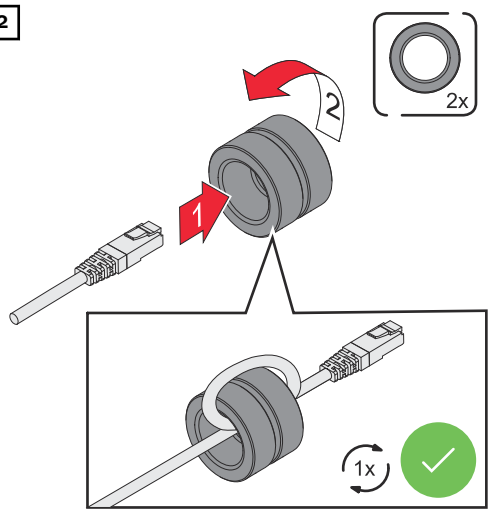

Feed the data cable through the 2 ferrite cores and wrap them together once.

3

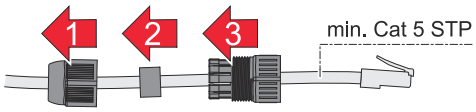

First feed the data cable through the union nut and then through the seal and cable gland.

4

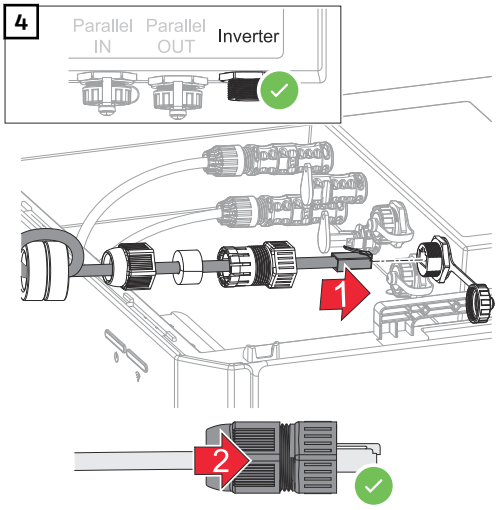

Connect the data cable to the "Inverter" data communication connection with an audible click. Fasten the union nut to the cable gland.

Connecting a data communication cable for battery parallel operation

IMPORTANT!
The maximum cable length between the inverter and the battery is 30 m and the maximum cable length between the battery systems is 10 m.

IMPORTANT!
It is not possible to guarantee effectiveness of the cable gland and IP65 protection class for the data communication connection if the connection is not established correctly.

Overview

The terminating resistors are integrated in the Reserva Pro BMS. As such, no configuration or installation of terminating resistors on the battery is required.

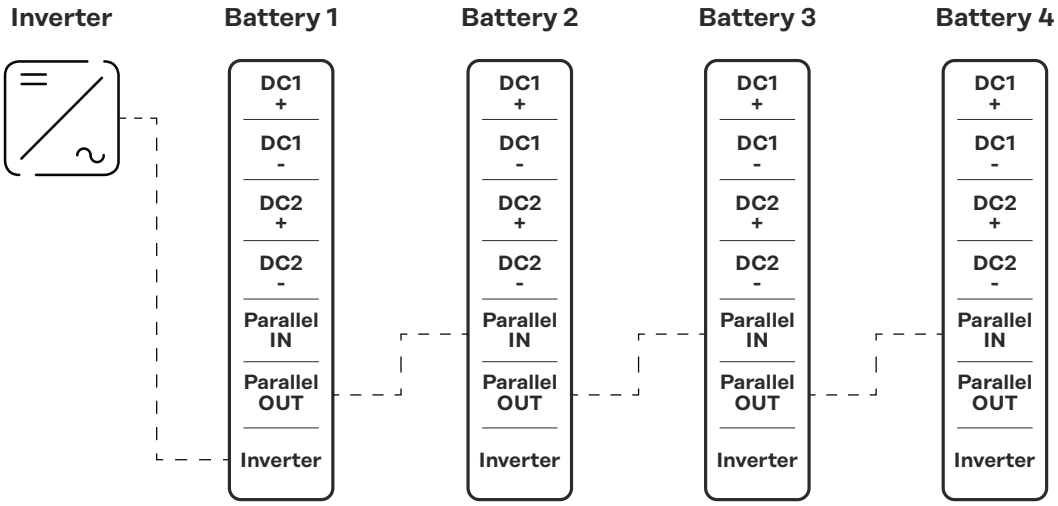

1

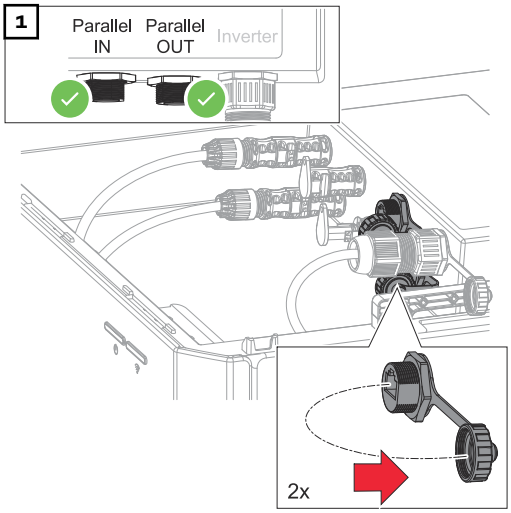

Unscrew the caps on the "Parallel IN" and "Parallel OUT" data communication connections.

2

First feed the data cable through the union nut and then through the seal and cable gland.

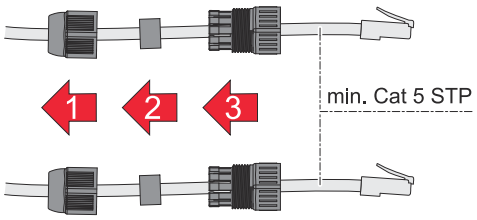

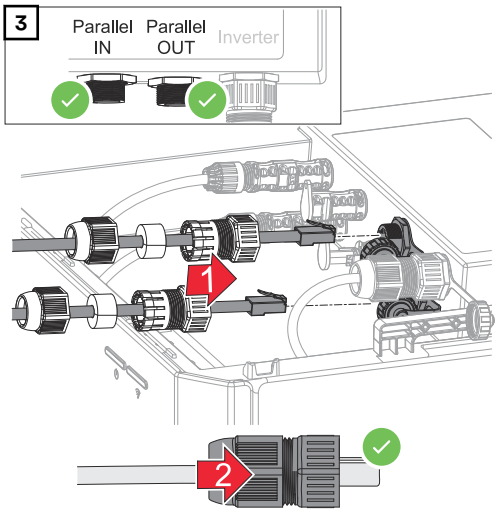

Connect the data cables to the "Parallel IN" and "Parallel OUT" data communication connections with an audible click. Fasten the union nuts to the cable glands.

Terminating resistors for systems with a battery

Installation without terminating resistors can lead to interference during operation of the photovoltaic system. To ensure faultless functionality, install terminating resistors according to the following overview.

For permitted cables and maximum distances for the data communication area, see chapter Permitted cables for the data communication connection on page 34.

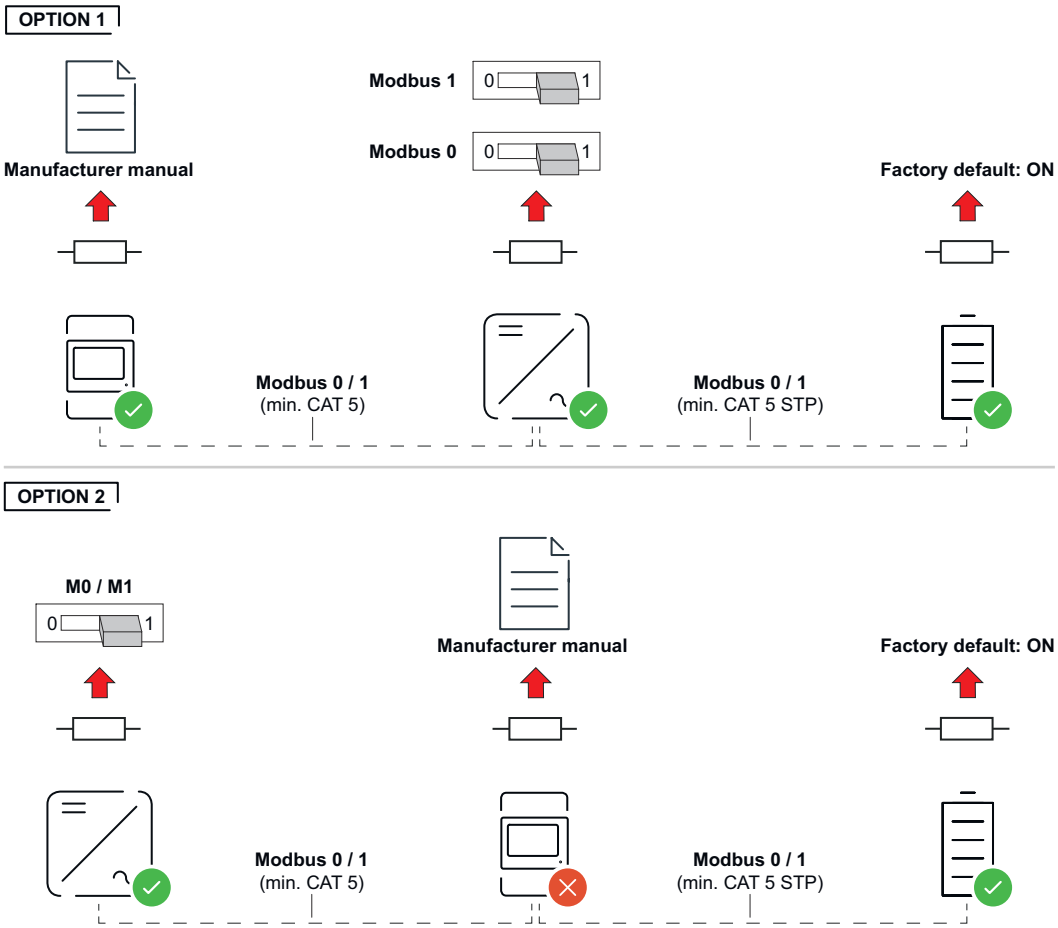

Terminating resistors for a system with batteries in parallel operation

Installation without terminating resistors can lead to interference during operation of the photovoltaic system. To ensure faultless functionality, install terminating resistors according to the following overview.

For permitted cables and maximum distances for the data communication area, see chapter Permitted cables for the data communication connection on page 34.

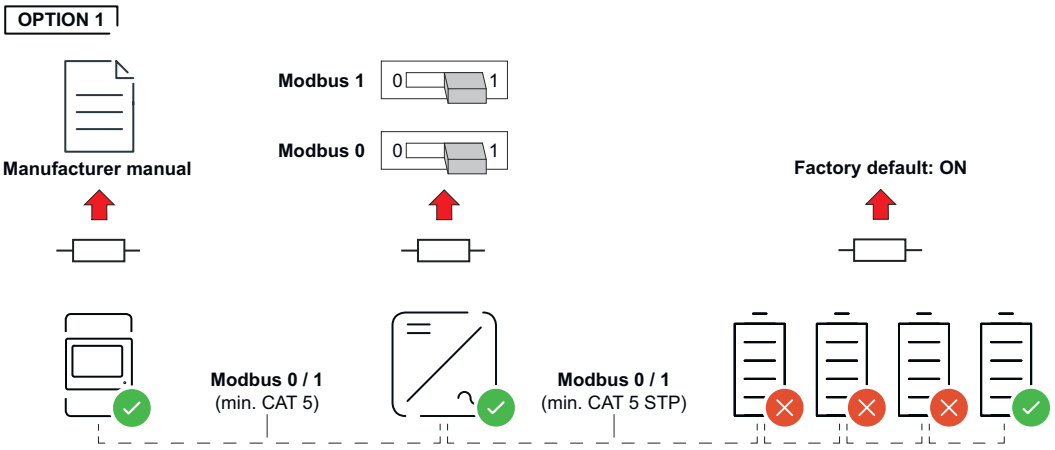

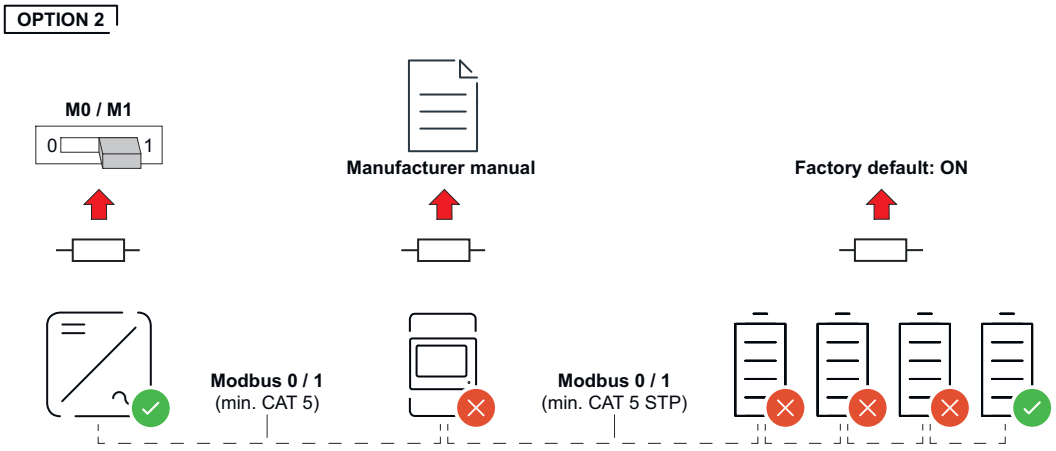

1

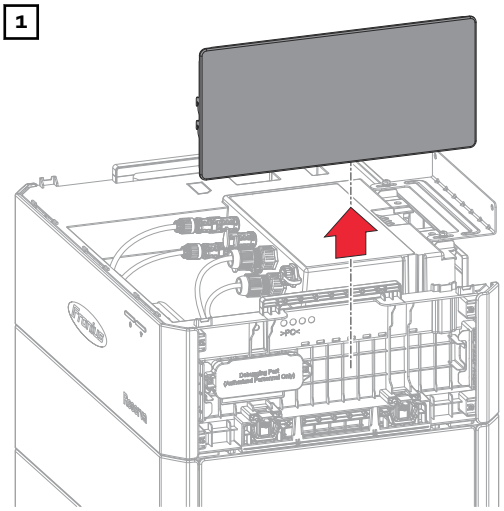

Slide the right-hand cover on the Reserva Pro BMS upwards and lift it off.

2

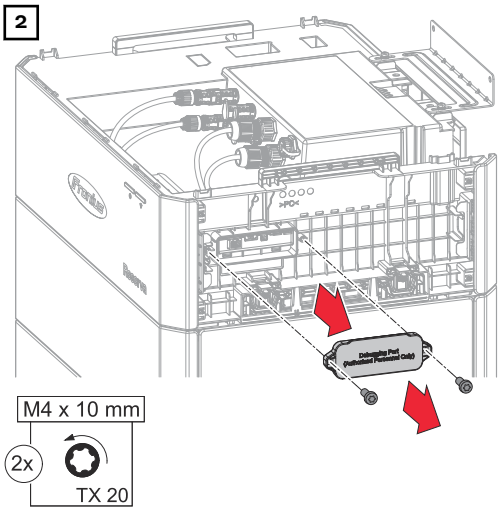

Loosen the 2 screws of the connection area cover with a screwdriver (TX20). Remove the connection area cover from the device.

3

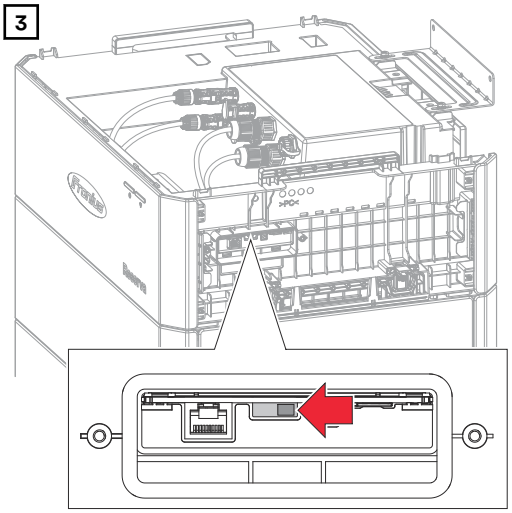

Set the "Terminal Resistor Switch" to the "OFF" position.

4

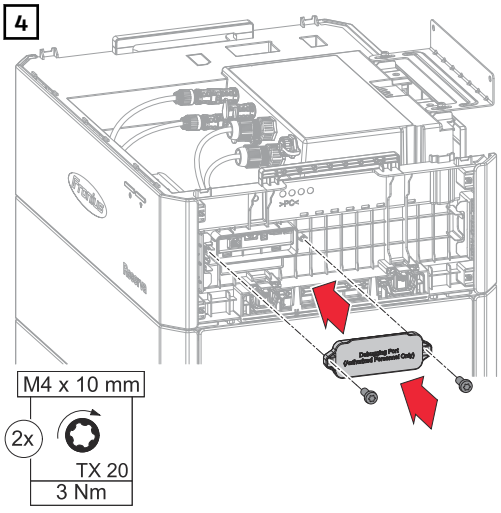

Place the cover on the connection area. Tighten the 2 screws with a screwdriver (TX20) and a torque of 3 Nm.

5

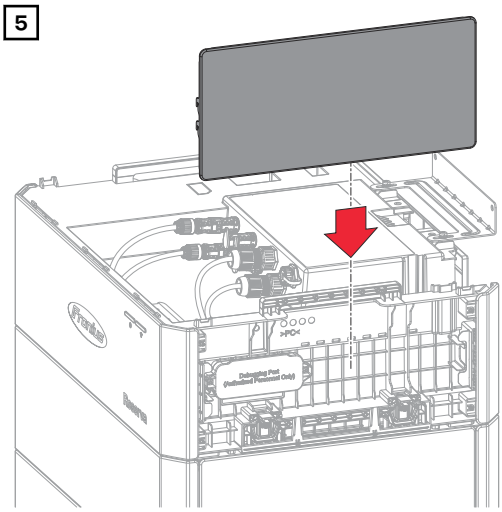

Push in the right-hand cover from above until the covers click into place.

Finally...

Selecting the mounting material

Use appropriate mounting materials depending on the surface and pay attention to the recommendation for the screw dimensions for the L-shaped mounting bracket. A technical specialist is responsible for selecting appropriate mounting material.

Fitting the mounting bracket

⚠ CAUTION!

Danger of battery systems toppling over if not installed correctly.
This can result in injuries and damage to property.

- ▶ Secure the battery system against toppling over using the mounting bracket supplied.

1

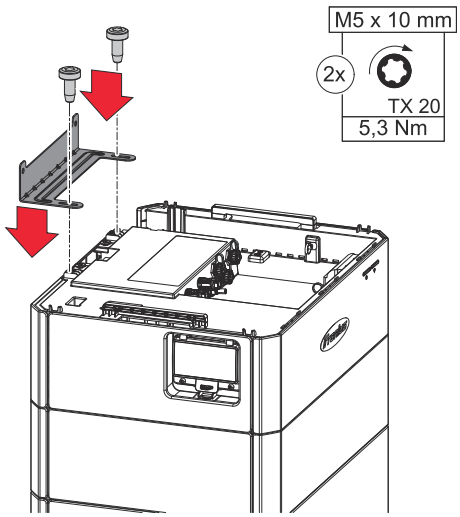

Fasten the mounting bracket to the BMS using the M5x10 TX20 screws supplied and a torque of 5.3 Nm.

2

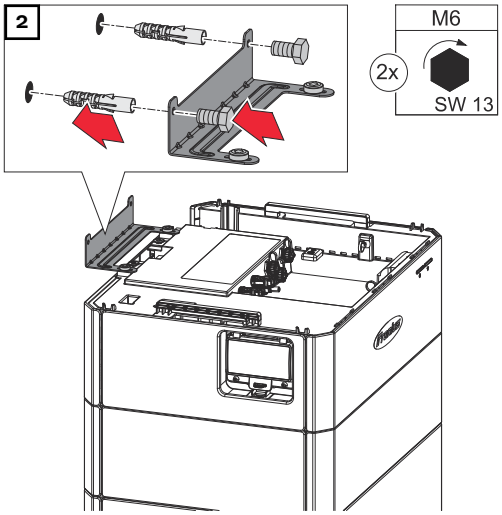

Attach the mounting bracket to the wall using suitable mounting material (see chapter Selecting the mounting material on page 49).

Securing the cables in the connection area

1

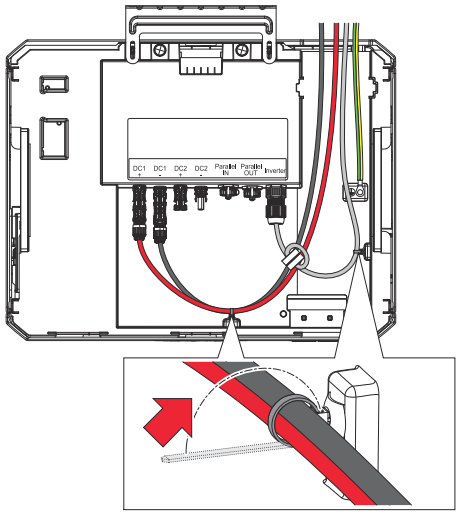

Lay the cables in the cable duct integrated in the connection area and secure them with the integrated cable ties.

Fitting the cover to the Reserva Pro BMS

1

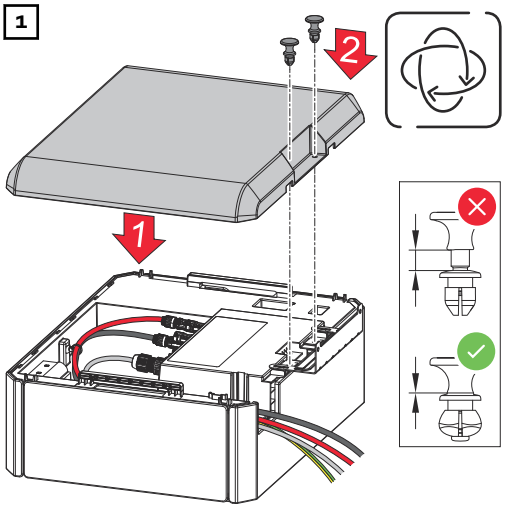

Place the (top) cover on the Reserva Pro BMS and secure it with the fastening clips supplied.

Replacing/adding the Reserva Pro module to the battery system

Safety

⚠ WARNING!

Danger due to soiled battery connections.
This can result in severe personal injury and damage to property.
- ▶ Protect the battery connections from dirt.
- ▶ Check the battery connections for soiling.
- ▶ Always use personal protective equipment (insulated gloves, safety goggles, protective clothing) when cleaning soiled battery connections and remove soiling with a lint-free cloth without the use of cleaning agents.

⚠ CAUTION!

Danger due to improper battery transportation or installation.
This can result in injuries.
- ▶ Use the integrated carrying handles for lifting the battery and setting it down.
- ▶ When lowering the battery, make sure that limbs do not come between the battery and the fixtures.
- ▶ Wear personal protective equipment.

Requirements for expanding the battery system

Observe the following points when expanding the battery system in order to be able to use its full capacity:
- The State of Charge (SoC) must be 15% **(**enable **service mode**, see chapter Setting the State of Charge (SoC) with Service Mode on page 51).
- Carry out the expansion within the first 2 years of starting for the first time.

NOTE!

Restriction applies to expansion of the battery system after 2 years.
Expansion of the battery system is possible after 2 years, but with the restriction that the added battery module is operated with the lowest State of Health (SoH) in the battery system.

Example of expansion outside the manufacturer's recommended period	
SoH of new Reserva Pro module	100%
SoH of installed Reserva Pro modules	96%
SoH of entire battery system	**96%**

Setting the State of Charge (SoC) with Service Mode

☐ To activate **Service Mode**, a connection to the user interface of the inverter is required, see chapter Commissioning with the app on page 65 or Commissioning with the browser on page 65.

1. Open the user interface of the inverter.
2. Log in to the login section with user **Customer** or **Technician** and the relevant password.

3 Open the **Energy Management** > **Battery Management** > **Service Mode** menu area.

4 Activate **Service Mode**.

5 Click the **Save** button to save the settings.

✓ *The service mode is activated and the battery is charged/discharged to 30% SoC.*

Switching off the power to the photovoltaic system and battery

IMPORTANT!
Wait for the capacitors of the inverter to discharge.

1

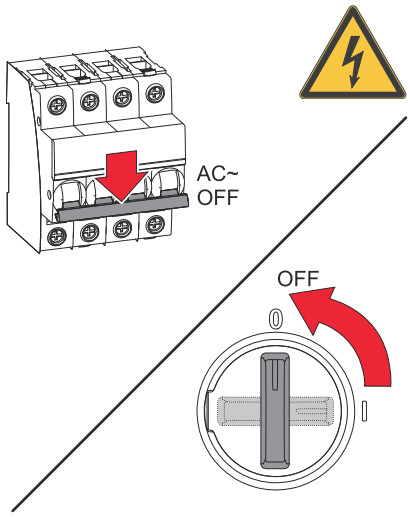

Turn off the automatic circuit breaker. Set the switch position of the inverter's DC disconnector to "Off".

IMPORTANT!
Before starting work on the BMS, all LEDs on the LED status indicator must be unlit.

2

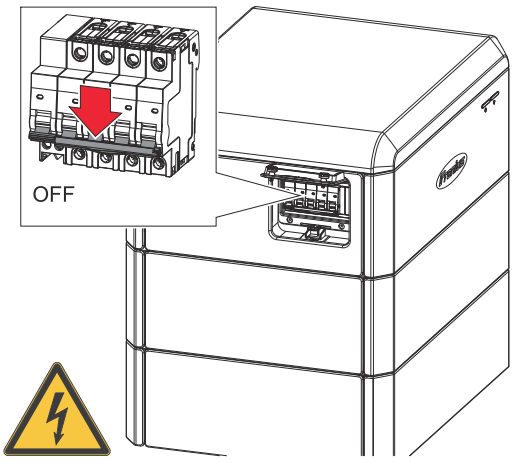

Set the switch position of the battery's DC disconnector to "Off".

Removing the covers on the battery

1

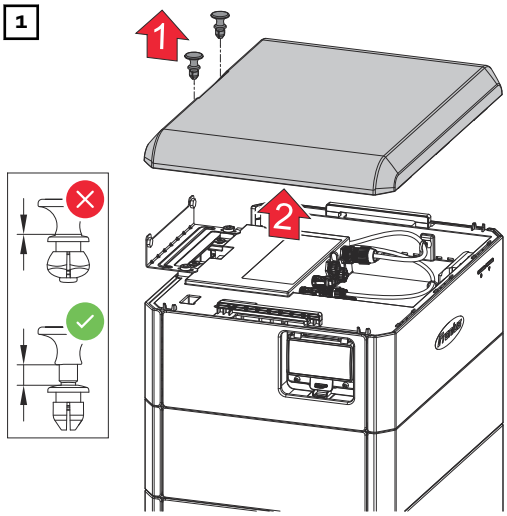

Remove the fastening clips from the top cover and lift off the cover.

2

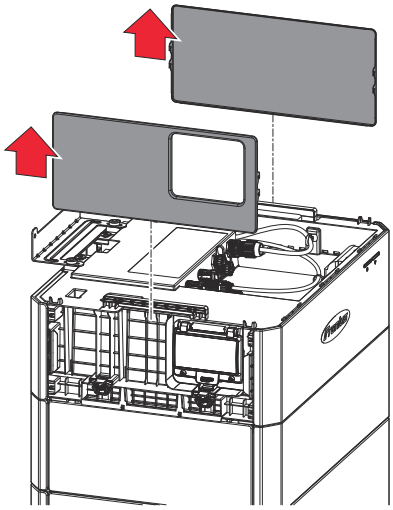

Slide the left and right-hand covers on the Reserva Pro BMS upwards and lift them off.

Disconnecting and removing the Reserva Pro BMS

1

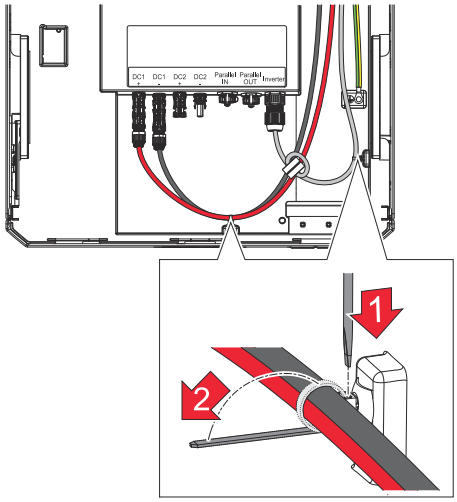

Detach the cables from the fastening clips.

2

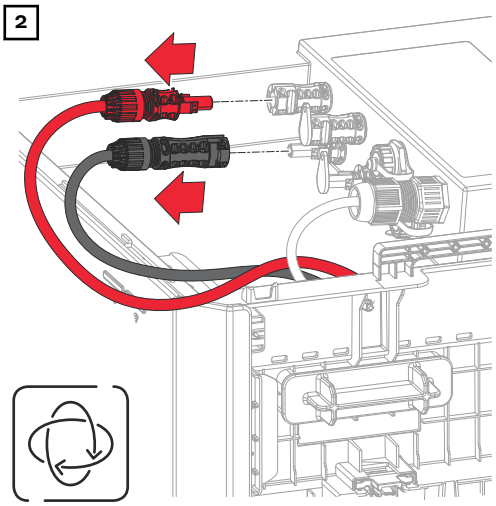

Release the MC4 plugs (+/-) using a suitable tool.

3

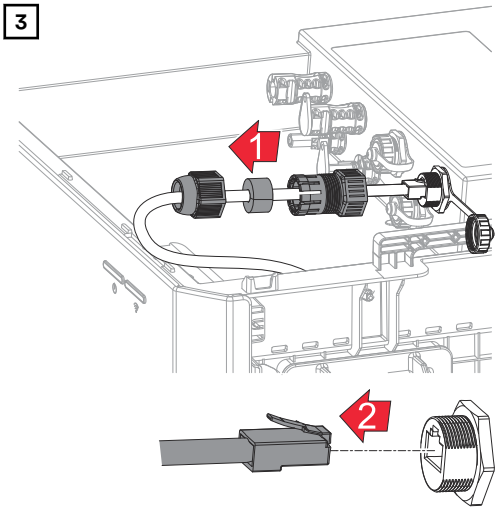

Unscrew the cable gland of the "INVERTER" data cable. Press the latch on the RJ45 plug and unplug the plug.

For batteries in parallel operation, also disconnect the "Parallel IN" and "Parallel OUT" data cables.

4

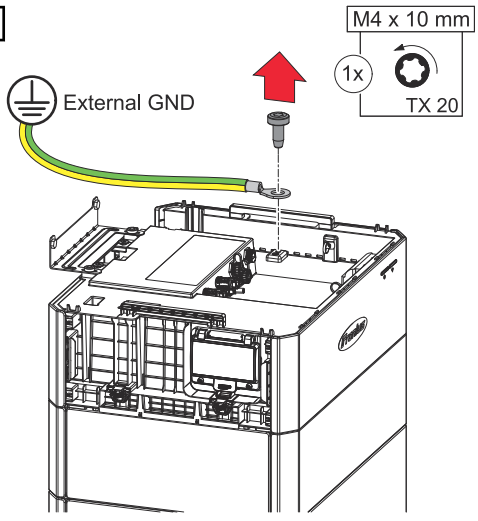

Using a screwdriver (TX20), loosen the ground conductor (PE).

5

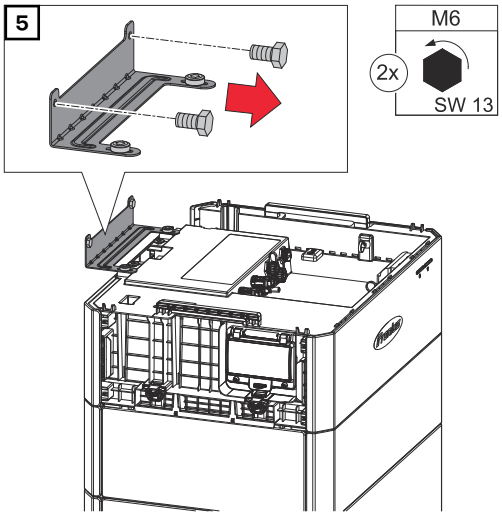

Release the L-shaped mounting bracket.

6

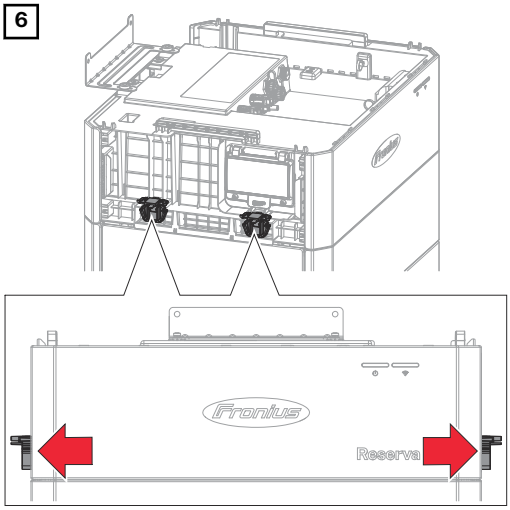

Pull out the 4 latches as far as they will go.

7

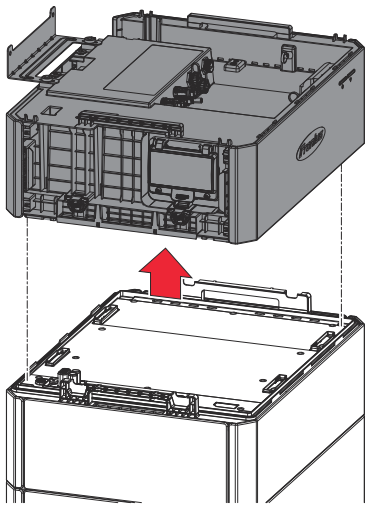

Lift the Reserva Pro BMS in parallel from the last Reserva Pro module.

Installing a new Reserva Pro module

1

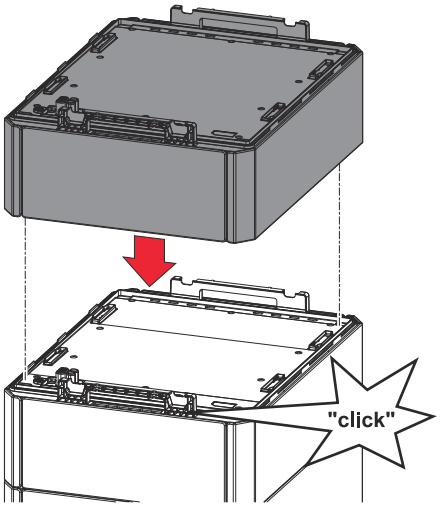

Arrange the new Reserva Pro module in parallel and press into place until the Reserva Pro module engages on both sides with an audible click.

Fitting the Reserva Pro BMS

1

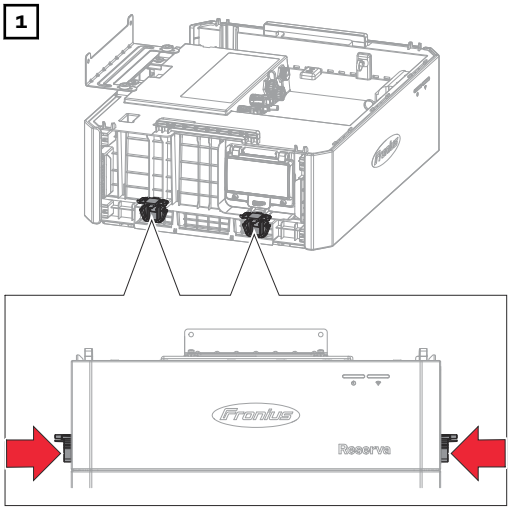

Press the 4 latches into their original position.

2

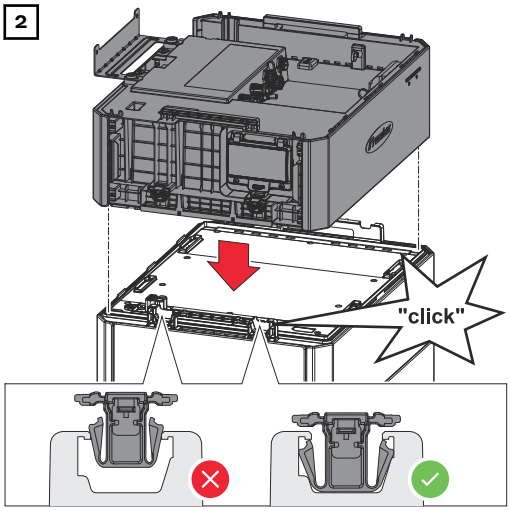

Arrange the Reserva Pro BMS in parallel on the last Reserva Pro module and press into place until the BMS engages on both sides with an audible click.

Fitting the side covers on the battery

1

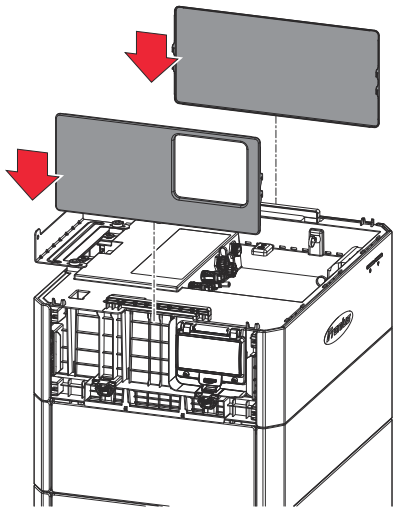

Push in the side covers from above until the covers click into place.

Connecting the Reserva Pro BMS

1

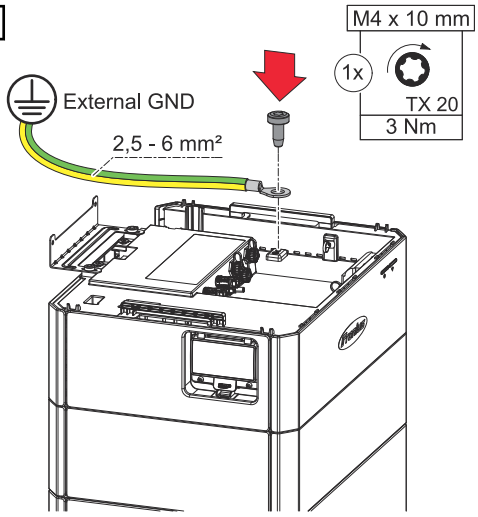

Fasten the ground conductor (PE) to the ground conductor connection using the M4x10 TX20 screw supplied and a torque of 3 Nm.

IMPORTANT!
Full selectivity of the overcurrent protection devices is only guaranteed if they are installed correctly.

2

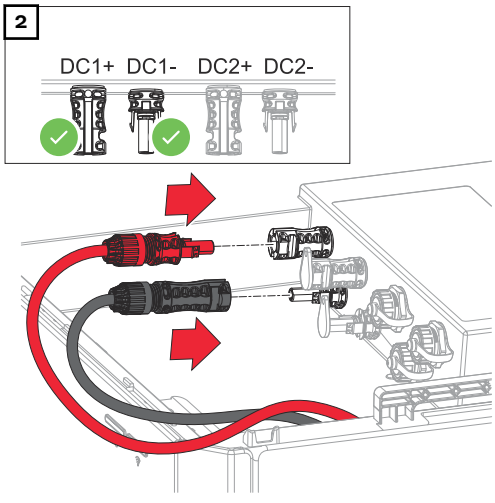

Push the MC4 plugs (+/-) into the DC1+/DC1- slots until they click into place.

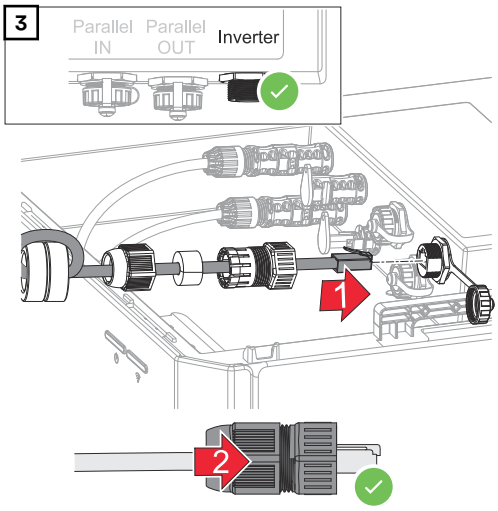

Connect the data cable to the "Inverter" data communication connection with an audible click. Fasten the union nut to the cable gland.

Securing the cables in the connection area

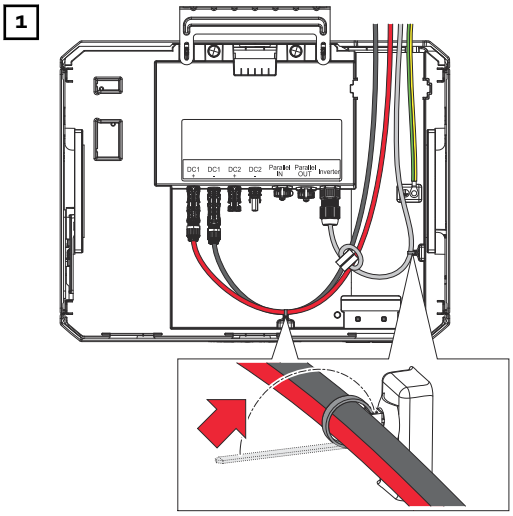

Lay the cables in the cable duct integrated in the connection area and secure them with the integrated cable ties.

Fitting the mounting bracket

⚠ CAUTION!

Danger of battery systems toppling over if not installed correctly.
This can result in injuries and damage to property.

▶ Secure the battery system against toppling over using the mounting bracket supplied.

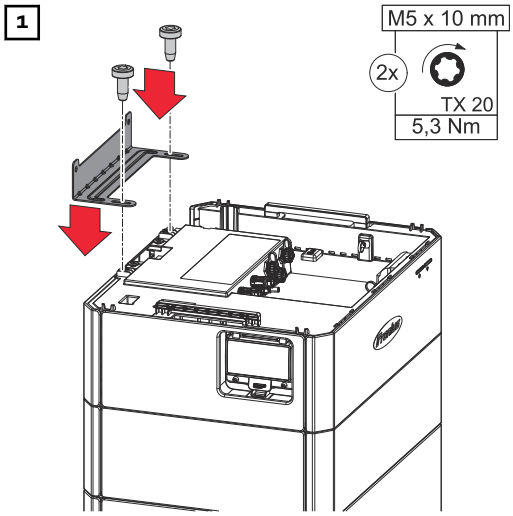

Fasten the mounting bracket to the BMS using the M5x10 TX20 screws supplied and a torque of 5.3 Nm.

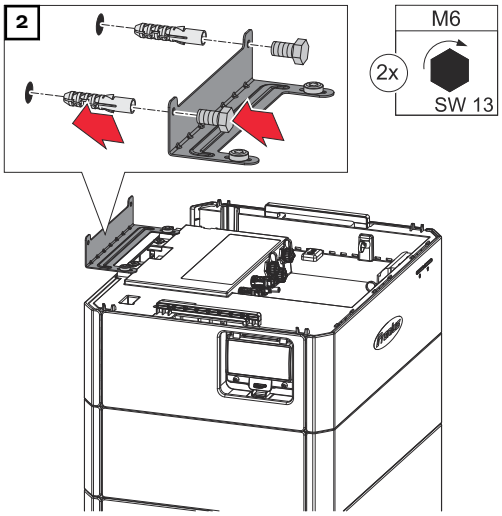

Attach the mounting bracket to the wall using suitable mounting material (see chapter Selecting the mounting material on page 49).

Fitting the cover to the Reserva Pro BMS

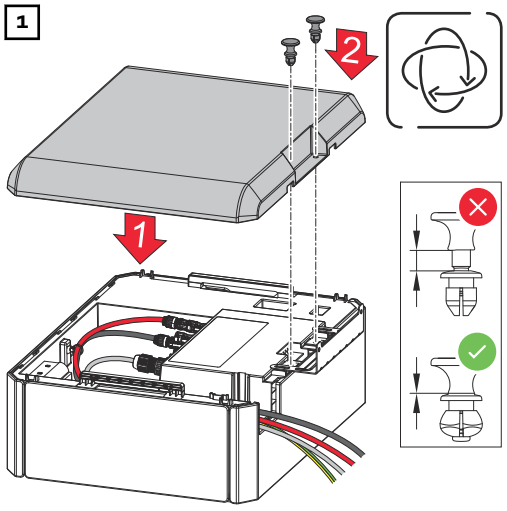

Place the (top) cover on the Reserva Pro BMS and secure it with the fastening clips supplied.

Commissioning

Switching on the photovoltaic system

Switching on the photovoltaic system

1

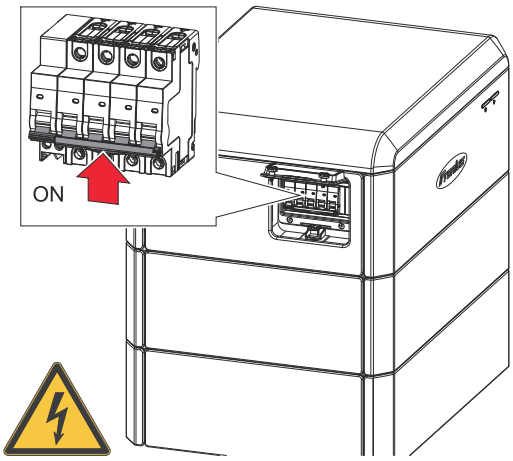

Set the switch position of the battery's DC disconnector to "On".

2

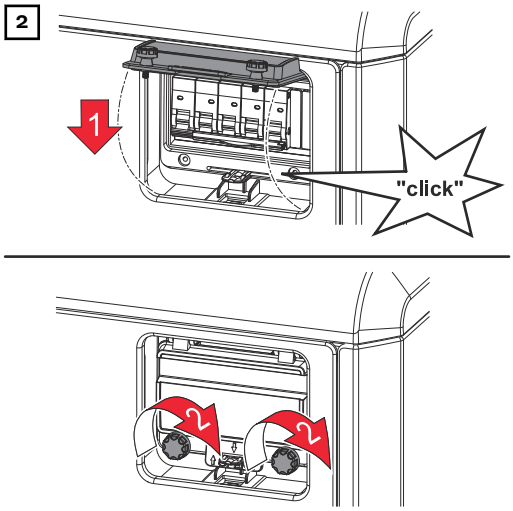

Close the cover on the DC disconnector with an audible click and secure it with the screws to prevent unauthorized opening.

3

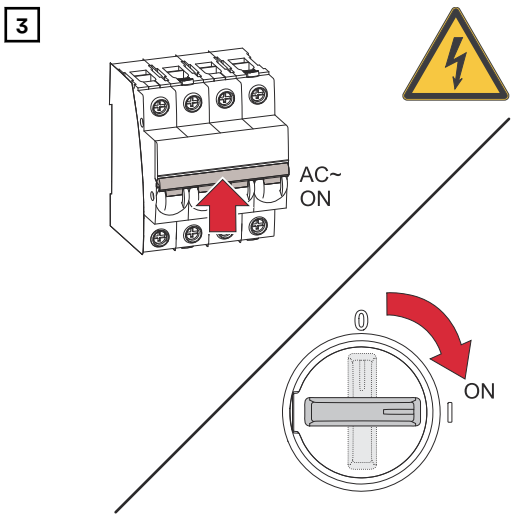

Turn on the automatic circuit breaker. Set the switch position of the inverter's DC disconnector to "On".

Manual system start

Requirements

There is no energy available from the PV modules or from the public grid. If backup power operation or battery operation are not possible (e.g., deep discharge protection of the battery), the inverter and battery switch off.

Notification of system shutdown

Status codes about the inactive state of the battery are displayed on the user interface of the inverter. A notification via e-mail can be activated in Fronius Solar.web.

Manual battery start (dark start) after a system shutdown

As soon as energy is available again, the inverter and the battery will start operation automatically. If the battery has switched off to protect against deep discharge for example, the battery must be started manually (dark start), see chapter Switching on the photovoltaic system on page 63.

Starting backup power mode after a system shutdown

The inverter requires a supply of energy from the battery to start backup power mode. This is established manually on the battery as described below.

1

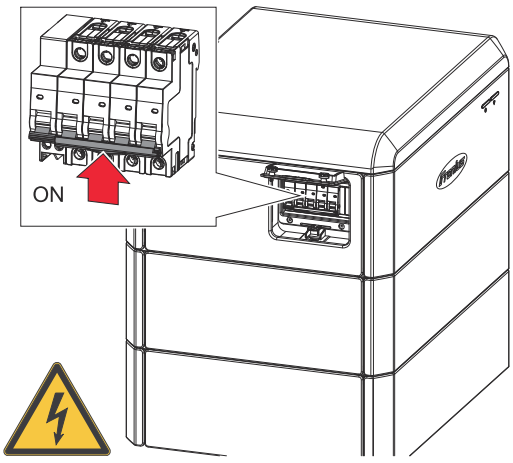

Set the switch position of the battery's DC disconnector to "On".

2

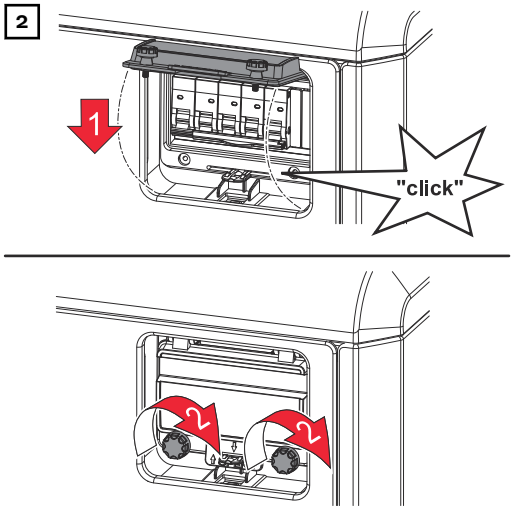

Close the cover on the DC disconnector with an audible click and secure it with the screws to prevent unauthorized opening.

Settings – User interface of the inverter

General

IMPORTANT! Settings in the **Device Configuration** menu item may only be entered by staff trained to do so!

To access the **Device Configuration** menu item, you must log in with user “Technician” and the technician password.

Commissioning with the app

The Fronius Solar.start app is required for commissioning. Depending on the mobile device used to perform the installation, the app is available on the relevant platform.

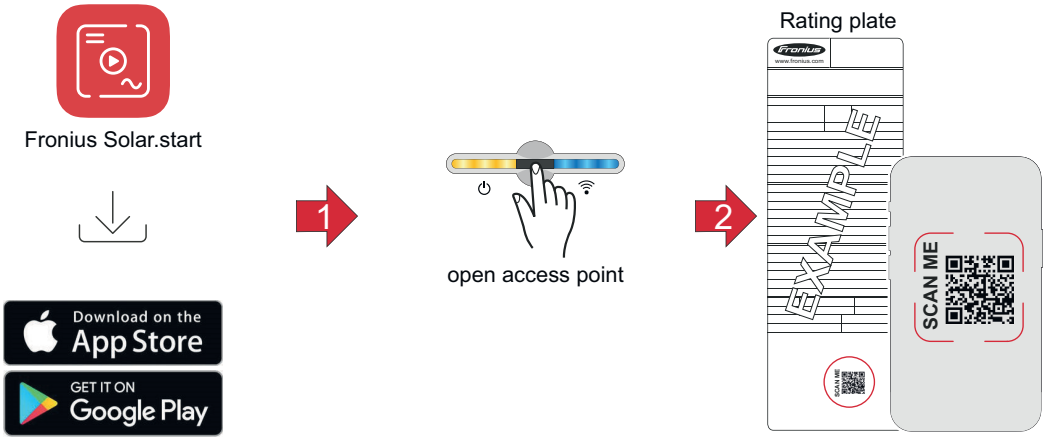

1 Download and install the Fronius Solar.start app.

2 Open the access point on the inverter by touching the sensor .

✓ *Communications LED flashes blue.*

3 Open the Fronius Solar.start app and scan the QR code on the rating plate of the inverter using a smartphone or tablet to connect to the inverter.

4 Add the battery as in chapter Adding a battery in the user interface of the inverter on page 66.

The network wizard and product setup can be performed independently. A network connection is required for the Fronius Solar.web installation wizard.

Commissioning with the browser

WiFi:

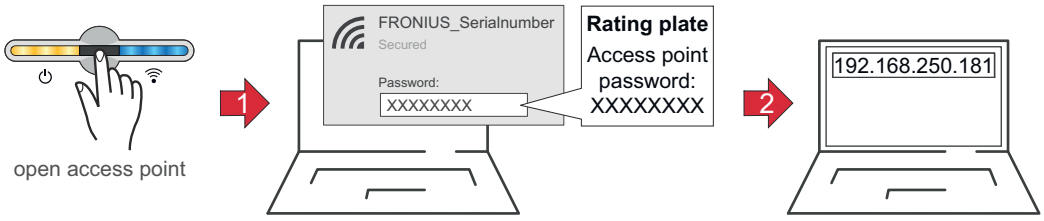

1 Open the access point on the inverter by touching the sensor .

✓ *Communications LED flashes blue.*

2 Establish the connection to the inverter in the network settings (the inverter is displayed with the name “FRONIUS_” and the serial number of the device).

3 Enter the password from the inverter's rating plate and confirm.
IMPORTANT!
To enter the password in Windows 10, first select the **Connect using a security key instead** link to be able to establish the connection with the password.

4 Enter the IP address 192.168.250.181 in the address bar of the browser and confirm to connect to the inverter.

5 Add the battery as in chapter Adding a battery in the user interface of the inverter on page 66.

The network wizard and product setup can be performed independently. A network connection is required for the Fronius Solar.web installation wizard.

Ethernet:

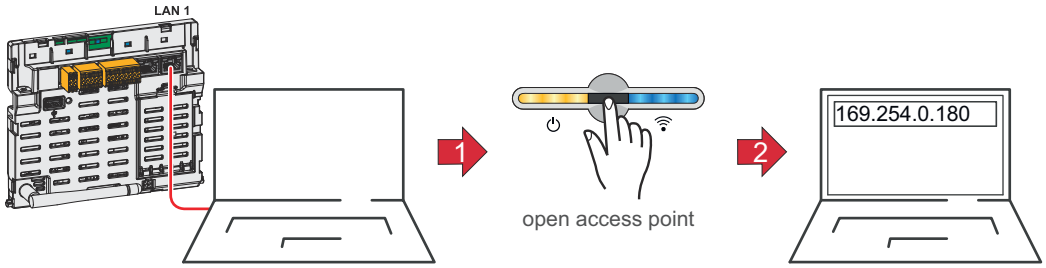

1 Establish a connection to the inverter (LAN1) using a network cable (min. CAT5 STP).

2 Open the access point on the inverter by touching the sensor .

✓ *Communications LED flashes blue.*

3 Enter the IP address 169.254.0.180 in the address bar of the browser and confirm to connect to the inverter.

4 Add the battery as in chapter Adding a battery in the user interface of the inverter on page 66.

The network wizard and product setup can be performed independently. A network connection is required for the Fronius Solar.web installation wizard.

Adding a battery in the user interface of the inverter

1 Open the user interface of the inverter.

2 In the **Login** menu area or in the **User** > **User Login** menu area, log in with username and password.

3 Go to the **Device Configuration** > **Components** menu area.

4 Click on the **Add components+** button.

5 Select the **Fronius battery** battery in the **Type** drop-down list.

6 Click on the **Add** button.

7 Click the **Save** button to save the settings.

✓ *The battery has been added to the PV system.*

Firmware update

Obsolete firmware/software versions may lead to incompatibilities between the inverter and the battery. In this case, the following steps are to be performed:

1 Open the user interface of the inverter.

2 Log in with user name and password in the **Log in** menu field or in the **User** > **User login** menu field.

3 Call up the **System** > **Update** menu field.

4 Drag the firmware file into the **drop file here** field, or select via **Select file**.

✓ *The update is carried out.*

All available updates are provided on the product page and in the "Fronius Download Search" area at www.fronius.com .

Appendix

Service, maintenance and disposal

Cleaning

If necessary, wipe the surfaces of the battery system with a damp cloth.
Do not use cleaning agents, abrasive cleaners, solvents or similar to clean the battery system.

Maintenance

The device is maintenance-free. Service work may only be carried out by qualified technical personnel.

Forced re-charging

Forced re-charging to protect against deep discharge takes place automatically using solar energy or energy from the grid if the battery's state of charge (SoC) falls below the minimum level and the requirements are met.

NOTE!

Danger of deep discharge of battery modules.
This can result in irreparable damage to the battery modules.
▶ If the battery falls below the minimum state of charge (SoC), it must be recharged within 7 days to protect against deep discharge.

Requirements for forced re-charging of the battery system
- Set the switch position of the battery's DC disconnector to "On".
- Grid-connected operation of the inverter.

Start forced re-charging if the battery has switched off automatically to protect against deep discharge, see chapter Switching on the photovoltaic system on page 63.

Disposal

Waste electrical and electronic equipment must be collected separately and recycled in an environmentally sound manner in accordance with the European Directive and national law. Used equipment must be returned to the distributor or through a local authorized collection and disposal system. Proper disposal of the used device promotes sustainable recycling of resources and prevents negative effects on health and the environment.

Packaging materials
- Collect separately
- Observe local regulations
- Crush cardboard boxes

Warranty provisions

Fronius manufacturer's warranty

Detailed warranty conditions specific to your country can be found at www.fronius.com/solar/garantie .

Technical data

Fronius Reserva Pro 12.0

General data	
Usable capacity [1)]	56.6 Ah
Max. charging current -20 °C to -10 °C -10 °C to 5°C 5 °C to 10°C 10 °C to 15°C 15 °C to 48°C 48 °C to 50 °C	 2.6 A 13.4 A 20.2 A 33.7 A 50 A 2.6 A
Max. discharge current (A) -20 °C to -10 °C -10 °C to 0°C 0 °C to 48°C 48 °C to 50 °C	 6.7 A 13.4 A 50 A 2.6 A
Calendar service life (25 °C)	15 years
Permitted ambient temperature	-20 °C to 50 °C
Optimum operating temperature	15 °C to 30 °C
Permissible humidity	5% to 95%
Cooling	Convection cooling
Altitude	≤ 2,000 m
Reserva Pro module discharge rate (25 °C)	≤ 1% / month
Number of battery modules	3
Max. battery systems in parallel operation	4
Data communication between inverter and battery	RS485
Certifications	IEC 62619:2022 CE VDE-AR-E 2510-50:2017-05 EN 62477-1:2012+A11+A1+A12 IEC 62040-1:2017+A1+A2
EMC standards	EN IEC 61000-6-2:2019 EN IEC 61000-6-3:2021
UN transport test standard	UN 38.3
Certifications for environmental protection	RoHS REACH
Protection class (when installed)	IP65
Safety class	2
Pollution degree	2

General data	
Dimensions incl. covers [2] H × W × D	775 × 579 × 449 mm
Weight	126 kg
Battery code	IFpP17/102/354/[(22S)3S]E/-20+50/95

Electrical data	
Number of modules	3
Usable energy	11.96 kWh
Rated voltage	212.5 V
Operating AC voltage range	165 - 240 V
Charging/discharging capacity	11.86 kW
Max. short circuit current	2.2 kA

Fronius Reserva Pro 16.0

General data	
Usable capacity [1]	56.6 Ah
Max. charging current -20 °C to -10 °C -10 °C to 5°C 5 °C to 10°C 10 °C to 15°C 15 °C to 48°C 48 °C to 50 °C	 2.6 A 13.4 A 20.2 A 33.7 A 50 A 2.6 A
Max. discharge current (A) -20 °C to -10 °C -10 °C to 0°C 0 °C to 48°C 48 °C to 50 °C	 6.7 A 13.4 A 50 A 2.6 A
Calendar service life (25 °C)	15 years
Permitted ambient temperature	-20 °C to 50 °C
Optimum operating temperature	15 °C to 30 °C
Permissible humidity	5% to 95%
Cooling	Convection cooling
Altitude	≤ 2,000 m
Reserva Pro module discharge rate (25 °C)	≤ 1% / month
Number of battery modules	4
Max. battery systems in parallel operation	4
Data communication between inverter and battery	RS485

General data	
Certifications	IEC 62619:2022 CE VDE-AR-E 2510-50:2017-05 EN 62477-1:2012+A11+A1+A12 IEC 62040-1:2017+A1+A2
EMC standards	EN IEC 61000-6-2:2019 EN IEC 61000-6-3:2021
UN transport test standard	UN 38.3
Certifications for environmental protection	RoHS REACH
Protection class (when installed)	IP65
Safety class	2
Pollution degree	2
Dimensions incl. covers [2)] H × W × D	935 × 579 × 449 mm
Weight	162 kg
Battery code	IFpP17/102/354/[(22S)4S]E/-20+50/95

Electrical data	
Number of modules	4
Usable energy	15.95 kWh
Rated voltage	283.3 V
Operating AC voltage range	220 - 321 V
Charging/discharging capacity	15.82 kW
Max. short circuit current	2.2 kA

Fronius Reserva Pro 20.0

General data	
Usable capacity [1)]	56.6 Ah
Max. charging current -20 °C to -10 °C -10 °C to 5°C 5 °C to 10°C 10 °C to 15°C 15 °C to 48°C 48 °C to 50 °C	 2.6 A 13.4 A 20.2 A 33.7 A 50 A 2.6 A
Max. discharge current (A) -20 °C to -10 °C -10 °C to 0°C 0 °C to 48°C 48 °C to 50 °C	 6.7 A 13.4 A 50 A 2.6 A
Calendar service life (25 °C)	 15 years

General data	
Permitted ambient temperature	-20 °C to 50 °C
Optimum operating temperature	15 °C to 30 °C
Permissible humidity	5% to 95%
Cooling	Convection cooling
Altitude	≤ 2,000 m
Reserva Pro module discharge rate (25 °C)	≤ 1% / month
Number of battery modules	5
Max. battery systems in parallel operation	4
Data communication between inverter and battery	RS485
Certifications	IEC 62619:2022 CE VDE-AR-E 2510-50:2017-05 EN 62477-1:2012+A11+A1+A12 IEC 62040-1:2017+A1+A2
EMC standards	EN IEC 61000-6-2:2019 EN IEC 61000-6-3:2021
UN transport test standard	UN 38.3
Certifications for environmental protection	RoHS REACH
Protection class (when installed)	IP65
Safety class	2
Pollution degree	2
Dimensions incl. covers [2)] H × W × D	1095 × 579 × 449 mm
Weight	198 kg
Battery code	IFpP17/102/354/[(22S)5S]E/-20+50/95

Electrical data	
Number of modules	5
Usable energy	19.94 kWh
Rated voltage	354.2V
Operating AC voltage range	275 - 401 V
Charging/discharging capacity	19.78 kW
Max. short circuit current	2.2 kA

Fronius Reserva Pro 24.0

General data	
Usable capacity [1)]	56.6 Ah

General data	
Max. charging current -20 °C to -10 °C -10 °C to 5°C 5 °C to 10°C 10 °C to 15°C 15 °C to 48°C 48 °C to 50 °C	 2.6 A 13.4 A 20.2 A 33.7 A 50 A 2.6 A
Max. discharge current (A) -20 °C to -10 °C -10 °C to 0°C 0 °C to 48°C 48 °C to 50 °C	 6.7 A 13.4 A 50 A 2.6 A
Calendar service life (25 °C)	15 years
Permitted ambient temperature	-20 °C to 50 °C
Optimum operating temperature	15 °C to 30 °C
Permissible humidity	5% to 95%
Cooling	Convection cooling
Altitude	≤ 2,000 m
Reserva Pro module discharge rate (25 °C)	≤ 1% / month
Number of battery modules	6
Max. battery systems in parallel operation	4
Data communication between inverter and battery	RS485
Certifications	IEC 62619:2022 CE VDE-AR-E 2510-50:2017-05 EN 62477-1:2012+A11+A1+A12 IEC 62040-1:2017+A1+A2
EMC standards	EN IEC 61000-6-2:2019 EN IEC 61000-6-3:2021
UN transport test standard	UN 38.3
Certifications for environmental protection	RoHS REACH
Protection class (when installed)	IP65
Safety class	2
Pollution degree	2
Dimensions incl. covers [2)] H × W × D	1255 × 579 × 449 mm
Weight	234 kg
Battery code	IFpP17/102/354/[(22S)6S]E/-20+50/95

Electrical data	
Number of modules	6
Usable energy	23.93 kWh
Rated voltage	425 V
Operating AC voltage range	330 - 481 V
Charging/discharging capacity	23.73 kW
Max. short circuit current	2.2 kA

Fronius Reserva Pro 28.0

General data	
Usable capacity [1)]	56.6 Ah
Max. charging current -20 °C to -10 °C -10 °C to 5°C 5 °C to 10°C 10 °C to 15°C 15 °C to 48°C 48 °C to 50 °C	 2.6 A 13.4 A 20.2 A 33.7 A 50 A 2.6 A
Max. discharge current (A) -20 °C to -10 °C -10 °C to 0°C 0 °C to 48°C 48 °C to 50 °C	 6.7 A 13.4 A 50 A 2.6 A
Calendar service life (25 °C)	15 years
Permitted ambient temperature	-20 °C to 50 °C
Optimum operating temperature	15 °C to 30 °C
Permissible humidity	5% to 95%
Cooling	Convection cooling
Altitude	≤ 2,000 m
Reserva Pro module discharge rate (25 °C)	≤ 1% / month
Number of battery modules	7
Max. battery systems in parallel operation	4
Data communication between inverter and battery	RS485
Certifications	IEC 62619:2022 CE VDE-AR-E 2510-50:2017-05 EN 62477-1:2012+A11+A1+A12 IEC 62040-1:2017+A1+A2
EMC standards	EN IEC 61000-6-2:2019 EN IEC 61000-6-3:2021

General data	
UN transport test standard	UN 38.3
Certifications for environmental protection	RoHS REACH
Protection class (when installed)	IP65
Safety class	2
Pollution degree	2
Dimensions incl. covers [2] H × W × D	1415 × 579 × 449 mm
Weight	270 kg
Battery code	IFpP17/102/354/[(22S)7S]E/-20+50/95

Electrical data	
Number of modules	7
Usable energy	27.92 kWh
Rated voltage	495.8 V
Operating AC voltage range	385 - 562 V
Charging/discharging capacity	27.69 kW
Max. short circuit current	2.2 kA

Fronius Reserva Pro 32.0

General data	
Usable capacity [1]	56.6 Ah
Max. charging current -20 °C to -10 °C -10 °C to 5°C 5 °C to 10°C 10 °C to 15°C 15 °C to 48°C 48 °C to 50 °C	 2.6 A 13.4 A 20.2 A 33.7 A 50 A 2.6 A
Max. discharge current (A) -20 °C to -10 °C -10 °C to 0°C 0 °C to 48°C 48 °C to 50 °C	 6.7 A 13.4 A 50 A 2.6 A
Calendar service life (25 °C)	15 years
Permitted ambient temperature	-20 °C to 50 °C
Optimum operating temperature	15 °C to 30 °C
Permissible humidity	5% to 95%
Cooling	Convection cooling
Altitude	≤ 2,000 m

General data	
Reserva Pro module discharge rate (25 °C)	≤ 1% / month
Number of battery modules	8
Max. battery systems in parallel operation	4
Data communication between inverter and battery	RS485
Certifications	IEC 62619:2022 CE VDE-AR-E 2510-50:2017-05 EN 62477-1:2012+A11+A1+A12 IEC 62040-1:2017+A1+A2
EMC standards	EN IEC 61000-6-2:2019 EN IEC 61000-6-3:2021
UN transport test standard	UN 38.3
Certifications for environmental protection	RoHS REACH
Protection class (when installed)	IP65
Safety class	2
Pollution degree	2
Dimensions incl. covers [2)] H × W × D	1575 × 579 × 449 mm
Weight	306 kg
Battery code	IFpP17/102/354/[(22S)8S]E/-20+50/95

Electrical data	
Number of modules	8
Usable energy	31.90 kWh
Rated voltage	566.7 V
Operating AC voltage range	440 - 642 V
Charging/discharging capacity	31.64 kW
Max. short circuit current	2.2 kA

Explanation of footnotes

1) 99.5% depth of discharge (DoD), 0.25 C charge and discharge rate at 25 °C.

2) The protrusion of the adjustable feet and mounting bracket was not taken into account in the dimensions.

Dimensions

Fronius Reserva Pro

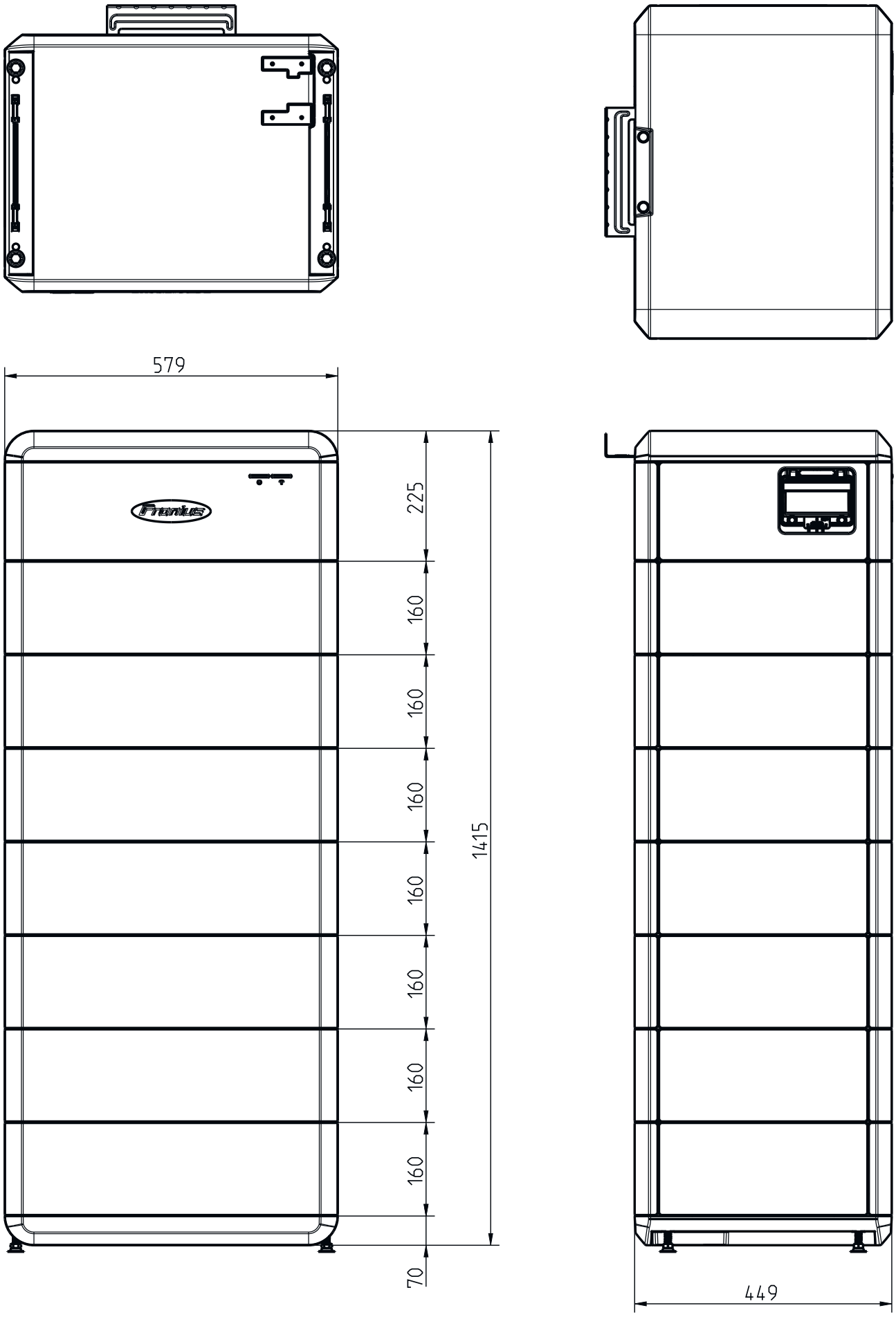



Fronius International GmbH
Froniusstraße 1
4643 Pettenbach
Austria
contact@fronius.com
www.fronius.com

At www.fronius.com/contact you will find the contact details of all Fronius subsidiaries and Sales & Service Partners.