enwitec
electronic



MANUAL

Automatic Transfer Switch for the SMA Flexible Storage System

"BATTERY BACKUP DISTRIBUTION" within Battery Backup Function

- SUNNY ISLAND 4.4M/6.0H/8.0H
- Sunny Home Manager or SMA Energy Meter

SMA

TABLE OF CONTENTS

1. About this guidance 4
1.1 Scope of application 4
1.3 Symbols used 5
2. Safety 6
2.1 Appropriate Usage 6
2.2 Safety Instructions 7
2.3 Symbols used on the type label 8
3. Scope of delivery 9
3.1 Single-Phase Battery Backup Distribution (all-pole disconnection) 9
3.2 Three-Phase Battery Backup Distribution (all-pole disconnection) 10
4. Electrical Connection 11
4.1 Installation Energy Meter / Home Manager 11
4.2 Single-Phase Distribution – all pole disconnection 12
4.2.1 Circuit diagram – Single-Phase automatic transfer switch 12
4.2.2 System integration – Single-Phase – automatic transfer switch 13
4.3 Three-Phase Distribution – all pole disconnection 14
4.3.1 Circuit diagram – Three-Phase automatic transfer switch 14
4.3.2 System integration – Three-Phase automatic transfer switch 15
5. Mounting the Battery Backup Distribution 16
5.1 Selecting the mounting location 16
5.2 Installation clearances 17
5.3 Dimensions and Cable Entry 18
5.3.1 Dimension and Fastening 18
5.3.2 Cable entry – Single-Phase Battery Backup Distribution 19
5.3.3 Cable entry – Three-Phase Battery Backup Distribution 20
6. Connection compartment – layout terminals 21
6.1 Single-Phase Battery Backup Distribution 21
6.2 Three-Phase Battery Backup Distribution 22
7. Protective Conductor Connections (PE) 23
8. Phase coupling within Single-Phase „IPC“ version 25
9. Connecting the grid – Main Supply 26
10. Connecting the Distribution Board (Load/PV) 26

10.1 Island-Mode (Backup Function) 26
10.2 Grid-mode 27
11. Connecting the Sunny Island's 28
11.1 Terminal Block X3 28
11.2 Terminal Block X4/X5 28
12. Speedwire-connection – Home Manager/Energy-Meter 29
13. Initial Operation 29
14. Disconnect from voltage 31
15. Maintenance and cleaning (spare-fuse) 32
16. How to stock the Battery Backup Distribution 33
17. Disposal 33
18. Technical Data 34
18.1 Single-Phase BBDAP 34
18.2 Three-Phase BBDAP 35
19. EC Declaration of Conformity 36

1. About this guidance

1.1 Scope of application

The following instructions are valid for all enwitec electronic GmbH & Co. KG produced “Battery Backup Distributions”, used in accordance with the recommendations of

SMA Solar Technology AG - Sonnenallee 1 34266 Niestetal - Germany

Please note that you have also to fulfil the corresponding SMA paperwork, like

- Installation guide - Sunny Island 4.4M/6.0H/8.0H
- SMA Flexible Storage documentation
- Planning guideline
- Quick reference guide

Type designations (enwitec electronic - matchcode) Battery Backup Distributions

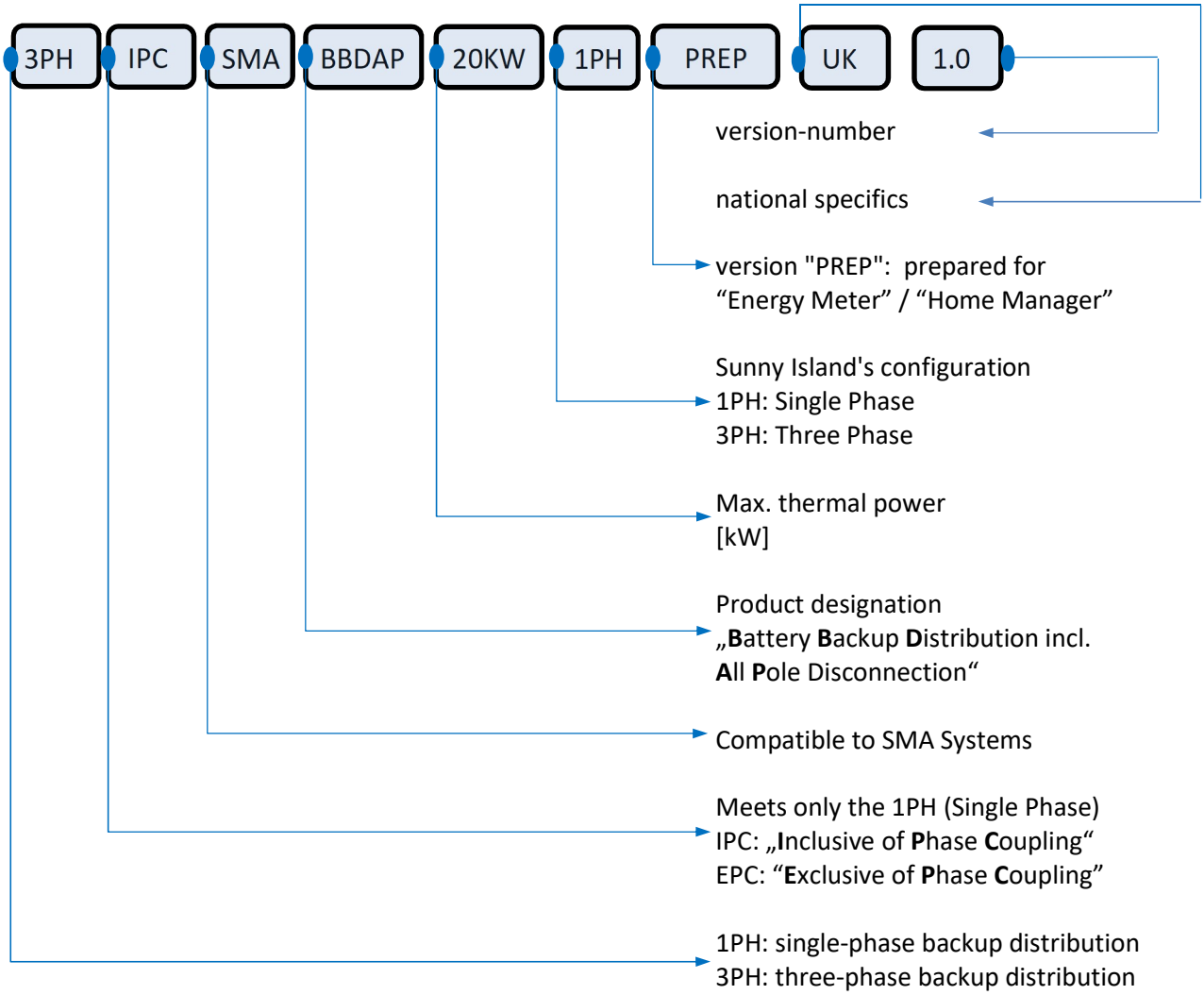

1.2 Target group

This guide is intended to professional electrician! The activities described in this guide may only be performed by qualified persons!

1.3 Symbols used



"Danger" indicates safety advice which, if not observed, will result immediately in death or severe personal injury!



"Warning" indicates safety advice which, if not observed, may result in death or severe personal injury!



"Caution" indicates safety advice which, if not observed, may result in light or medium personal injury!



"Attention" indicates safety advice which, if not observed, may result in material damage!



"Qualified electrician" indicates work that may only be performed by a certified electrician.



"Info" indicates important information!

2. Safety

2.1 Appropriate Usage

The „Battery Backup Distribution“ is an automatic transfer switch, suitable to the SMA „Flexible Storage System“, functionally in communicating to:

- SI 4.4M-12 (Sunny Island 4.4M) from Firmware 1.00.xx.R
- SI 6.0H-12 (Sunny Island 6.0H) from Firmware 1.00.xx.R
- SI 8.0H-12 (Sunny Island 8.0H) from Firmware 1.00.xx.R
- in combination with either
    - HM-20 (Sunny Home Manager 2.0) from Firmware 2.00.00.R

      or

    - EMETER-20 (SMA Energy Meter) from Firmware 2.0.15.R

The Sunny Island System controls this automatic transfer switch (hereinafter called „Battery Backup Distribution“ or shortened „BBD“) and creates an island network in case of main power blackouts.

The Battery Backup Distribution does an all-pole disconnection and isolates the PV-System and the load to the public network in a safe way.

The Battery Backup Distribution is only certified for TT- and TN-S grids!

Basically, you may only use the Battery Backup Distribution within the SMA „Flexible Storage System“ in combination with SMA – Sunny Island 4.4M/6.0H/8.0H. Consult the corresponding SMA paperwork (planning guidelines, installation-guides and all the other documents, which are applicable for your country and project).

Within a 3-phase system you have to do a master/slave configuration of the Sunny Island’s. The master is doing all the switching operations and controls the contactor’s activities. For more details you have to study the SMA paperwork!

Do not exceed the maximum power input and connection power. Please note accordingly the technical specifications of the various types (at chapter 18).

Do not use the Battery Backup Distribution for purposes other than those described here. Alternative uses, modifications and the installation of components void the warranty claims and operation permit.

2.2 Safety Instructions



Electric shock due to high voltages in the Battery Backup Distribution when connecting the device! Death or serious injuries!

- All work on the Battery Backup Distribution must be performed by a qualified personnel.
- Work on the Battery Backup Distribution should only be carried out as described in this manual.
- Observe all specified safety precautions



Construction and design of the Battery Backup Distribution is due to user-friendly handling of circuit breakers, fuse holder and RCCB's (residual current operated circuit breakers).

In addition (if the SMA Energy-Meter or the SMA Home Manager is included) you are able to notice different operational state of the system, shown by the LED's.

Please consider the relating SMA Original instructions of the Energy-Meter or Home Manager.

2.3 Symbols used on the type label

Symbol	Definition
	It is not allowed to dispose the Battery Backup Distribution in the household garbage!
	***CE-Declaration*** Declaration, that the Battery Backup Distribution meets all the mandatory european standards.
	***Protection class II*** The protection of the Battery Backup Distribution against electric shock is secured due to a reinforced insulation.
 no symbol	***Protection rating IP65 (Ingress Protection Rating)*** The Battery Backup Distribution is either protected against dust tight and water jets (IP65)or protected against solid foreign objects of ≥1 mm diameter and water splashing on all sides (IP44)
 no symbol	***max. ambient temperature (t_a) [°C]*** Up to this ambient temperature you may use the Battery Backup Distribution.
 no symbol	***Rated voltage [V]*** Do not use the Battery Backup Distribution in other than this voltage range!
 no symbol	***Rated frequency [Hz]*** Do not use the Battery Backup Distribution in other than this frequency range!
 no symbol	***Rated power [kW]*** **Do not connect more input- or distribution power!**
 no symbol	***Peak – Input current [A]*** **You may use the Battery Backup Distribution up to this peak-input current!**
 no symbol	***IEC/EN – Standard*** The Battery Backup Distribution fulfils: IEC/EN61439-1 "Low-voltage switchgear and controlgear assemblies" IEC/EN61439-2 "Power switchgear and controlgear assemblies" IEC/EN61439-3 "Distribution boards intended to be operated by ordinary persons (DBO)

3. Scope of delivery

3.1 Single-Phase Battery Backup Distribution (all-pole disconnection)

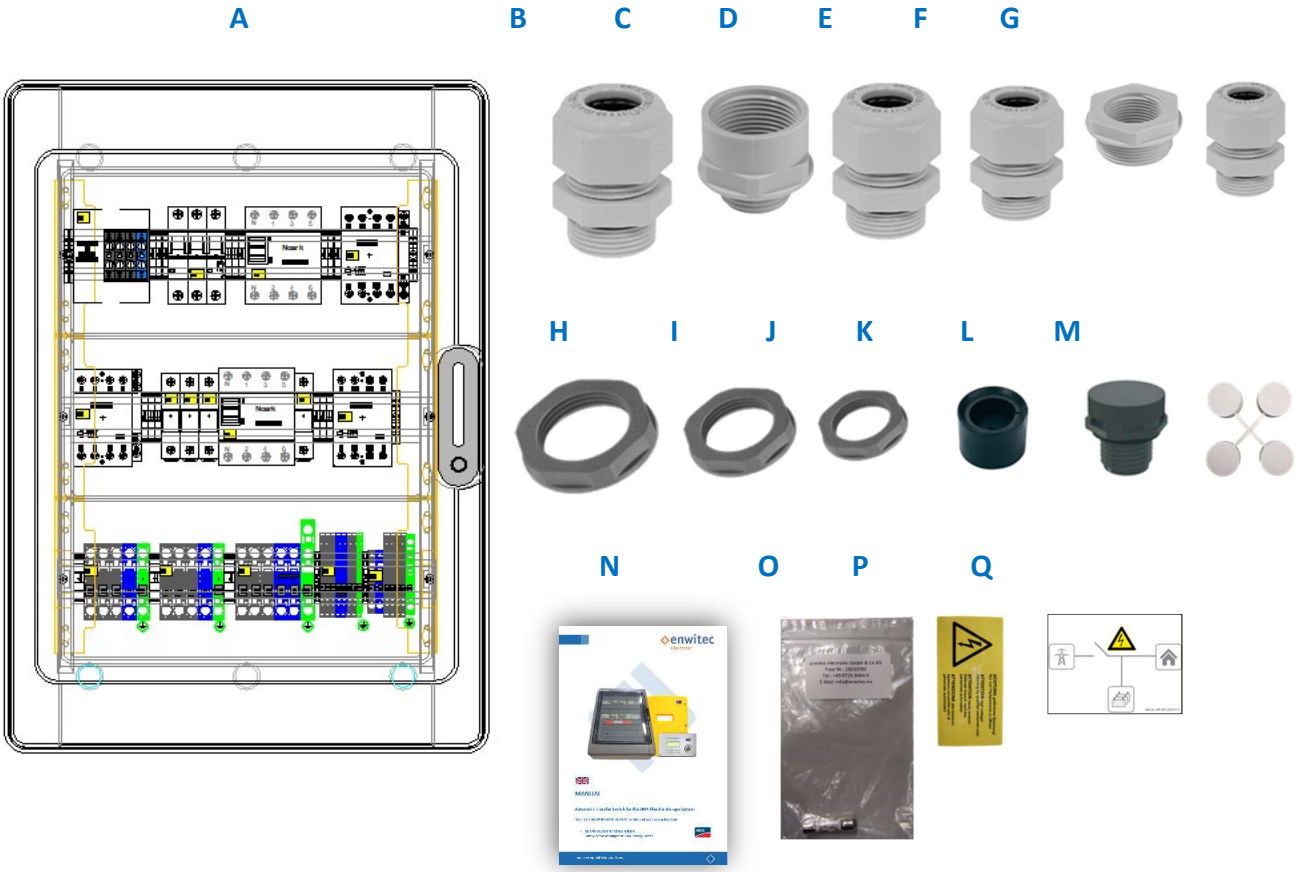

position	number	component
A	1	Battery Backup Distribution 1PH
B	2	Cable gland M40 x 1,5 (clamping range Ø 16 – 28mm)
C	2	Enlargement adaptor -M32 to M40-
D	3	Cable gland M32 x 1,5 (clamping range Ø 13 – 21mm)
E	2	Cable gland M25 x 1,5 (clamping range Ø 9 – 17mm)
F	1	Reduction adaptor -M20 to M12- (equalising membrane)
G	5	Cable gland M20 x 1,5 (clamping range Ø 6 – 13mm)
H	3	Locknut M32
I	2	Locknut M25
J	6	Locknut M20
K	1	Special sealing insert (CAT 5e cable „RJ45 Plug“ -M25-)
L	1	Equalising membrane
M	1	Cover caps for fastening screws
N	1	Installation Manual (this document) 10010371
O	3	Ferrule-fuse 10x38mm (either Littelfuse #KLKD-1A; Fast Acting or Bussmann #KTK-1A; Fast Acting) 2 pcs. inserted (Fuse-holders); 1 pc. as a spare-part
P	1	Warning-label “high voltage”
Q	1	Label - image "with reference to an island mode system ability"

3.2 Three-Phase Battery Backup Distribution (all-pole disconnection)

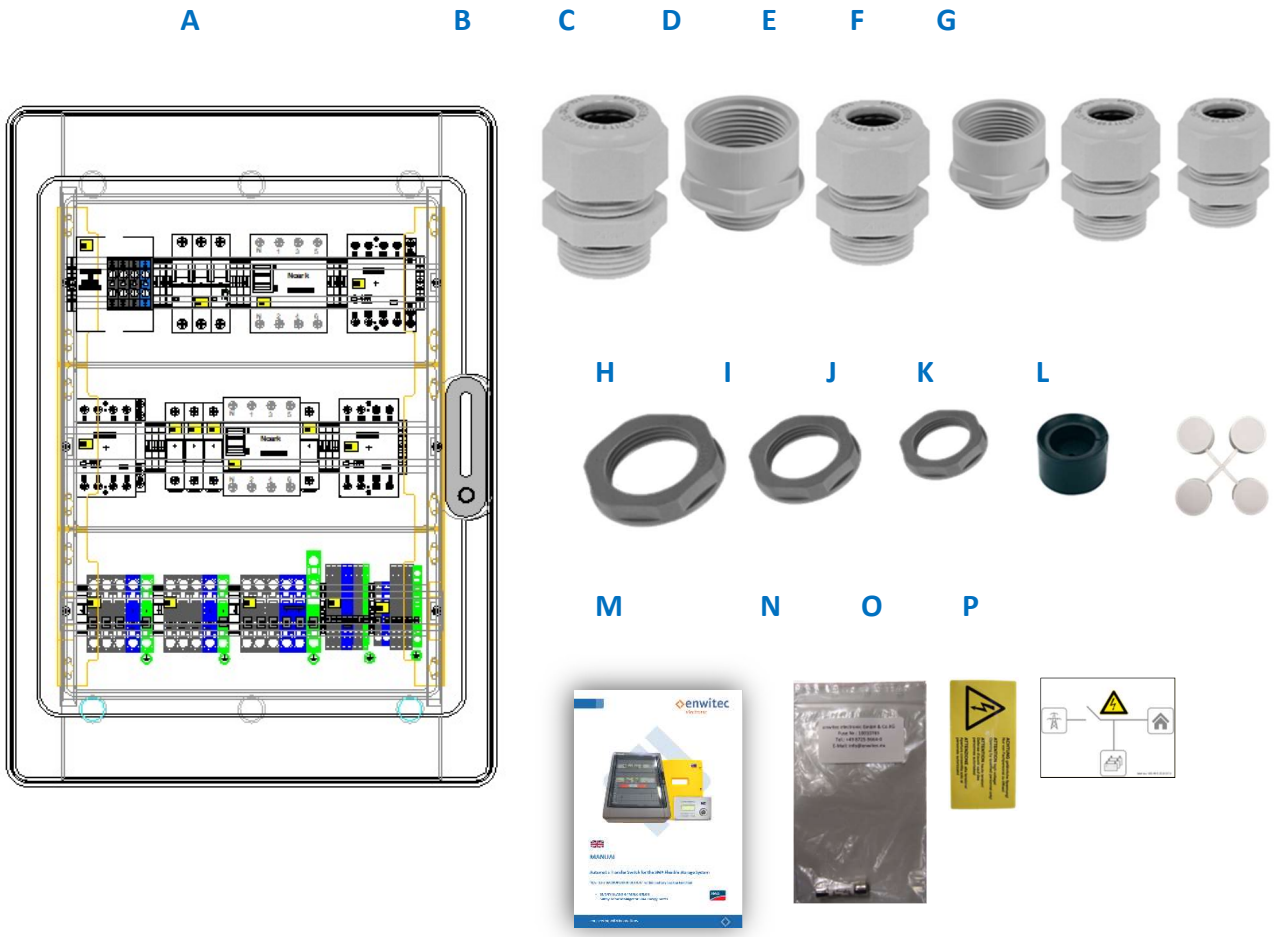

position	number	component
A	1	Battery Backup Distribution 3PH
B	2	Cable gland M40 x 1,5 (clamping range Ø 16 – 28mm)
C	2	Enlargement adaptor -M32 to M40-
D	5	Cable gland M32 x 1,5 (clamping range Ø 13 – 21mm)
E	2	Enlargement adaptor -M25 to M32-
F	2	Cable gland M25 x 1,5 (clamping range Ø 9 – 17mm)
G	7	Cable gland M20 x 1,5 (clamping range Ø 6 – 13mm)
H	3	Locknut M32
I	4	Locknut M25
J	7	Locknut M20
K	1	Special sealing insert (CAT 5e cable“RJ45 Plug“ -M25-)
L	1	Cover caps for fastening screws
M	1	Installation Manual (this document) 10010371
N	5	Ferrule-fuse 10x38mm (either Littelfuse #KLKD-1A; Fast Acting or Bussmann #KTK-1A; Fast Acting) 4 pcs. inserted (Fuse-holders); 1 pc. as a spare-part
O	1	Warning-label „high voltage“
P	1	Label - image "with reference to an island mode system ability"

4. Electrical Connection

4.1 Installation Energy Meter / Home Manager

WARNING

QUALIFIED ELECTRICIAN

Instead of the Energy Meter / Home Manager, screw terminals are used as placeholders.

An Energy Meter / Home Manager is not included in the scope of delivery and must be retrofitted!

The terminals are capable of carrying currents, whereby the basic function oft he automatic transfer switch is given. Thus, the automatic transfer switch can already be connected and tested without Energy Meter / Home Manager.

During installation, note the positioning of the Energy Meter / Home Manager to the cover strips of the distribution board.

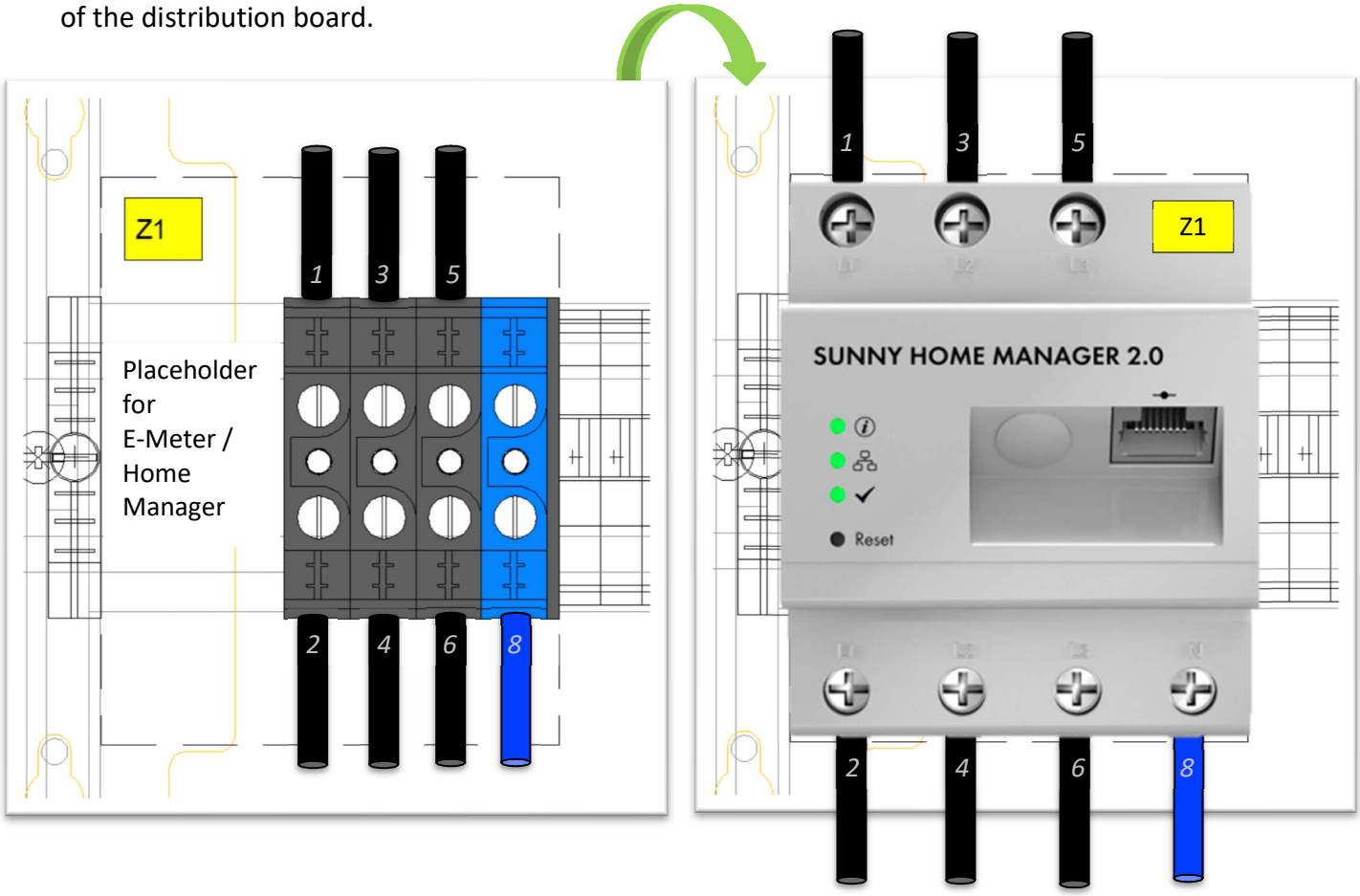

ATTENTION

When installing the Energy Meter / Home Manager, observe the **maximum permissible torque of 2.0 Nm**!

4.2 Single-Phase Distribution – all pole disconnection

4.2.1 Circuit diagram – Single-Phase automatic transfer switch

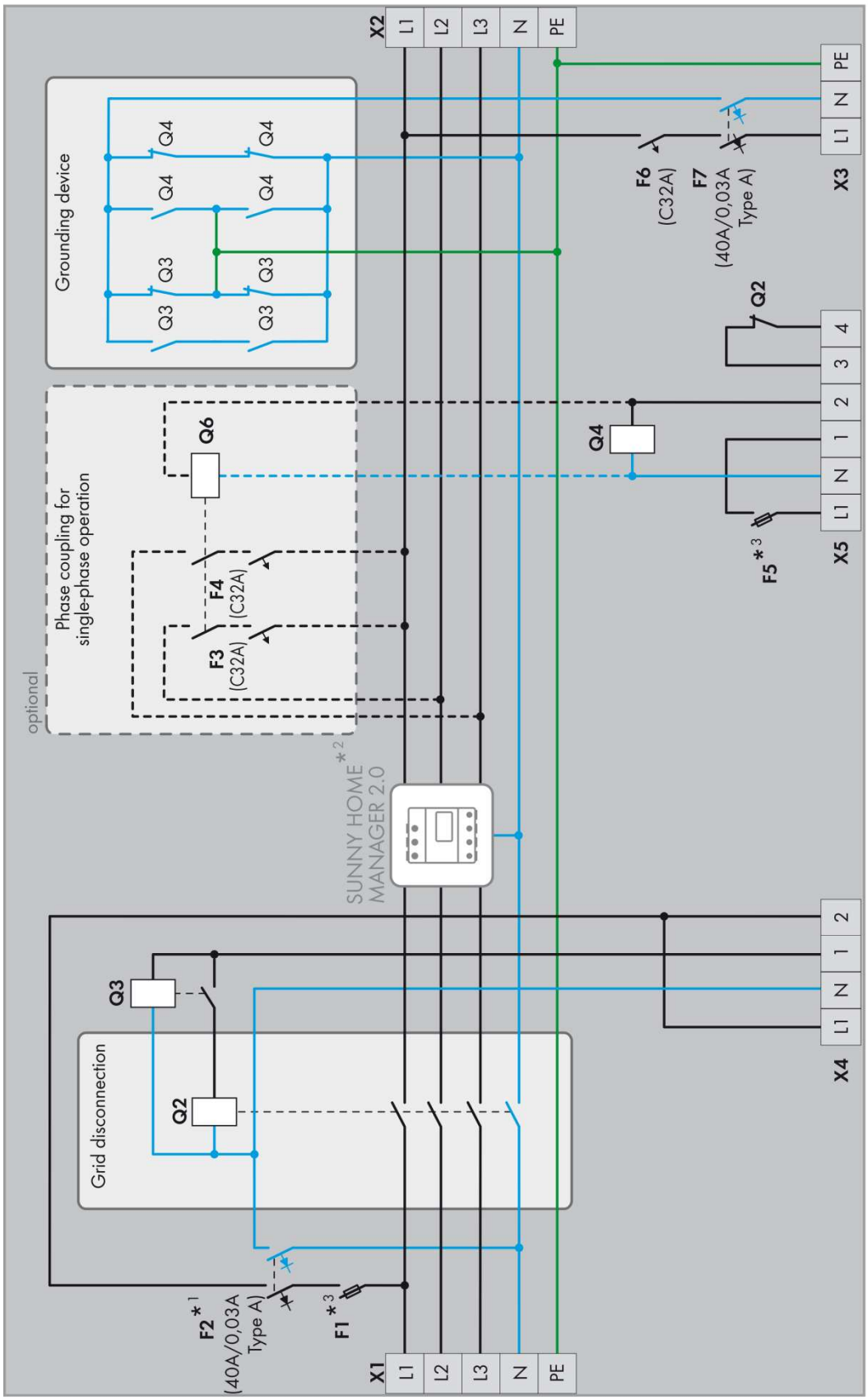

*1 Only when connecting to a TT grid, the line conductor and the neutral conductor must be fused.
*2 Not required for systems without increased self-consumption.
*3 Requirements for thermal fuse used: 1 A, nominal cold resistance of at least 0.2 Ω and melting integral max. 1A2s.
The indicated values in brackets are recommended by SMA Solar Technology AG. The electrical devices must be designed in accordance with the locally applicable standards and directives.

4.2.2 System integration – Single-Phase – automatic transfer switch

Circuitry Overview

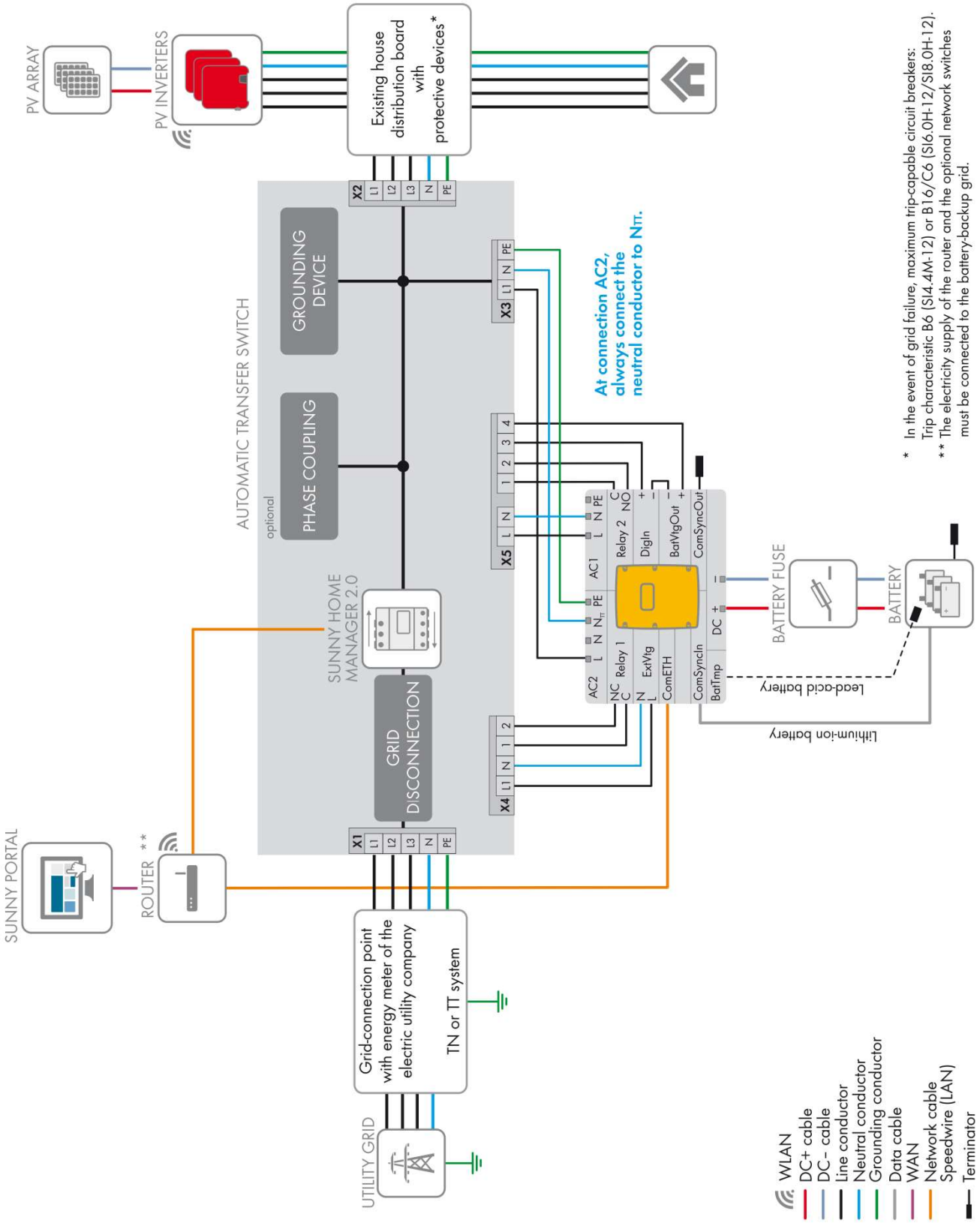

4.3 Three-Phase Distribution – all pole disconnection

4.3.1 Circuit diagram – Three-Phase automatic transfer switch

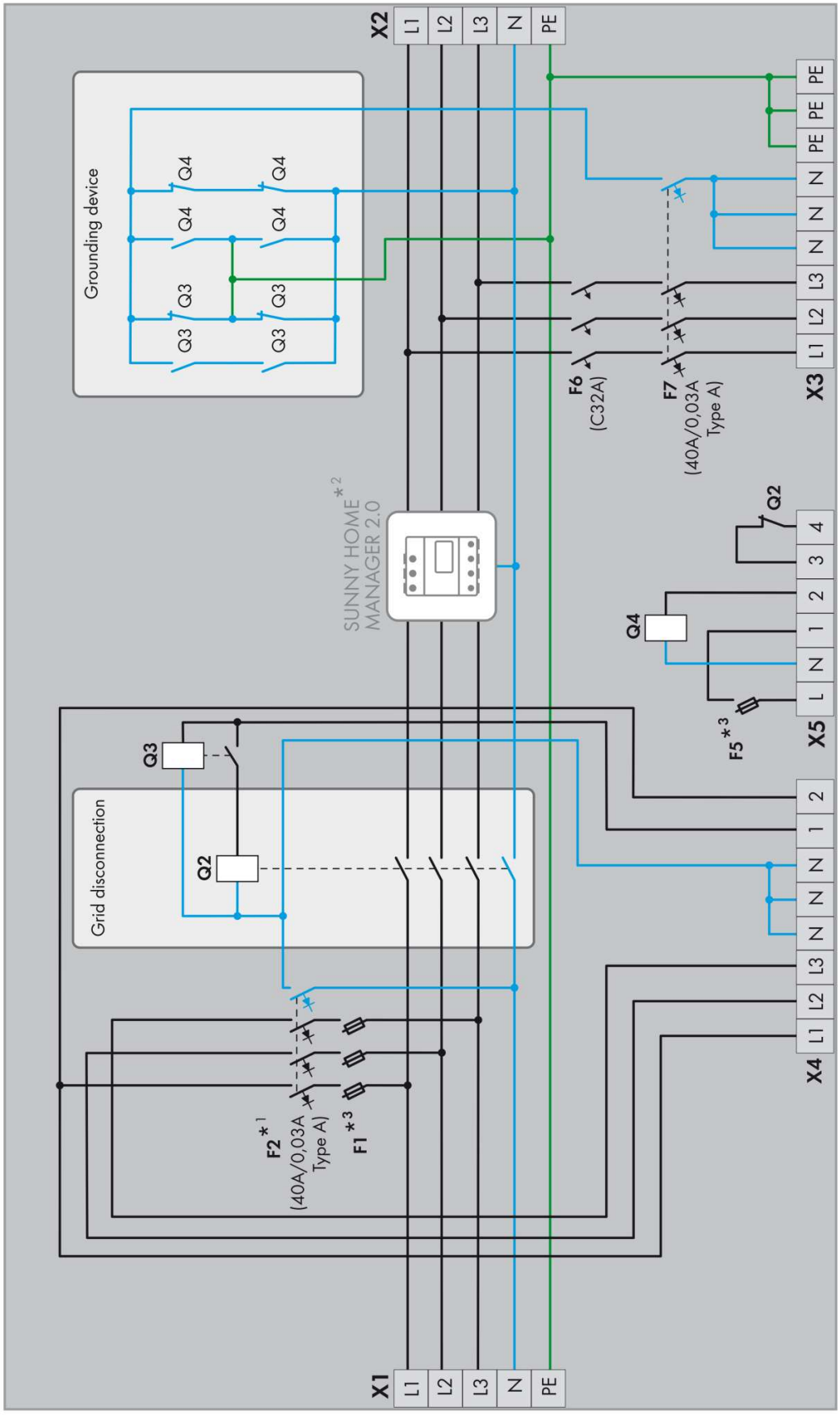

*1 Only when connecting to a TT grid, the line conductor and the neutral conductor must be fused.
*2 Not required for systems without increased self-consumption.
*3 Requirements for thermal fuse used: 1 A, nominal cold resistance of at least 0.2 Ω and melting integral max. 1A2s. The indicated values in brackets are recommended by SMA Solar Technology AG. The electrical devices must be designed in accordance with the locally applicable standards and directives.

4.3.2 System integration – Three-Phase automatic transfer switch

Circuitry Overview

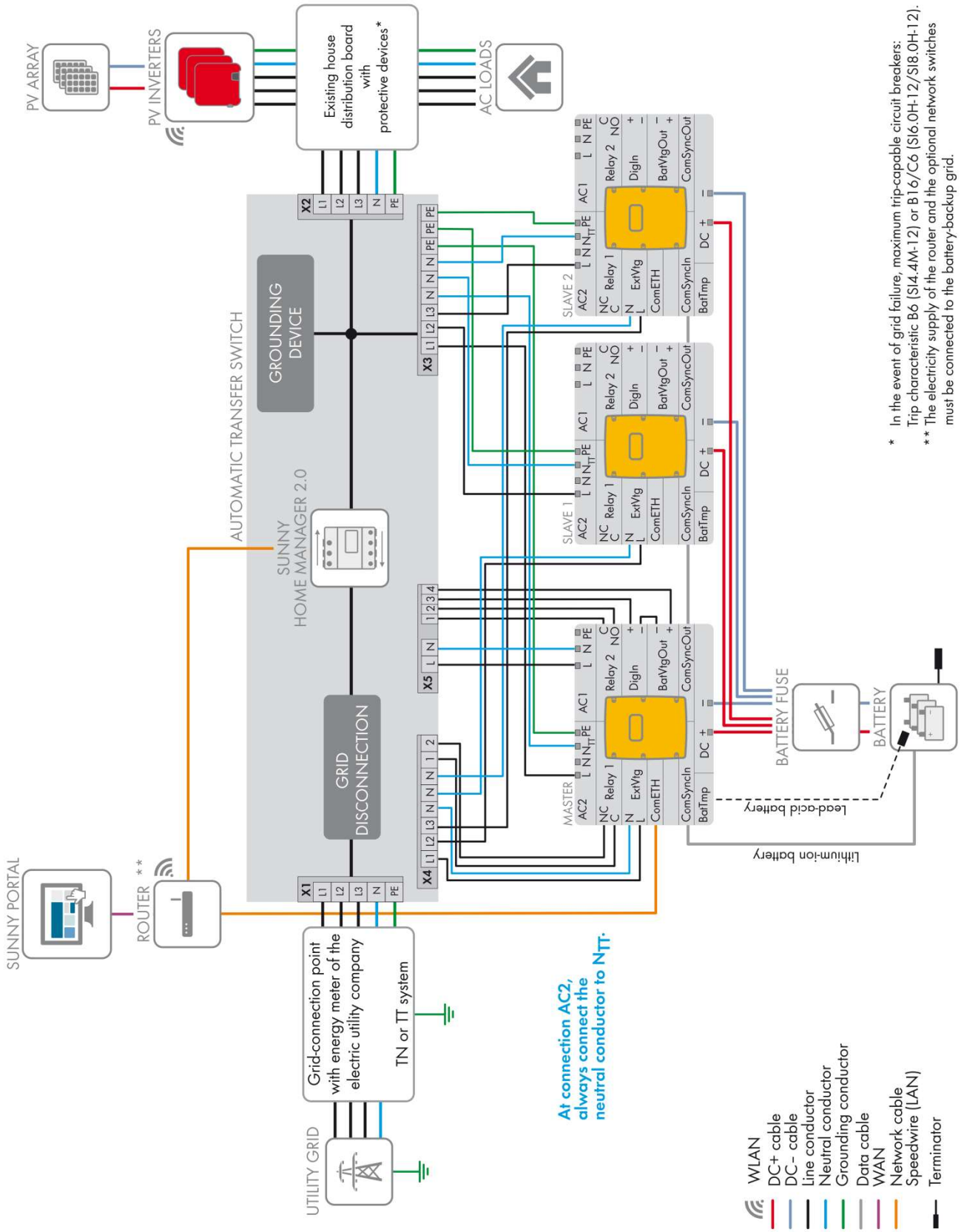

5. Mounting the Battery Backup Distribution

5.1 Selecting the mounting location

DANGER

risk of explosion or fire during the installation of the device in nonpermissible areas, death or serious burns. Despite careful engineering, electrical devices can cause fires!

- Do not mount the device on flammable construction materials.
- Do not mount the device near highly flammable materials.
- Do not mount the device in potentially explosive areas.

☑ Mount on a solid surface

☑ The mounting location and method must be suitable for the weight and dimensions

☑ The mounting location must be accessible at all times!

☑ climatic conditions must be in compliance to the specification (Look at chapter -18-)

☑ The device may not be exposed to direct sunlight and weathering!

☑ The mounting location has to be protected against splashing water!

☑ You have to fulfil the requirements of the network operator!

Installation position

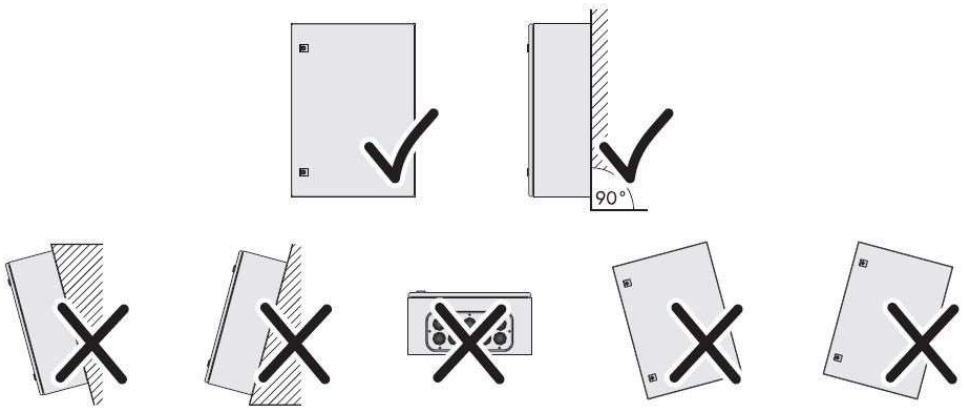

5.2 Installation clearances

Minimum distances

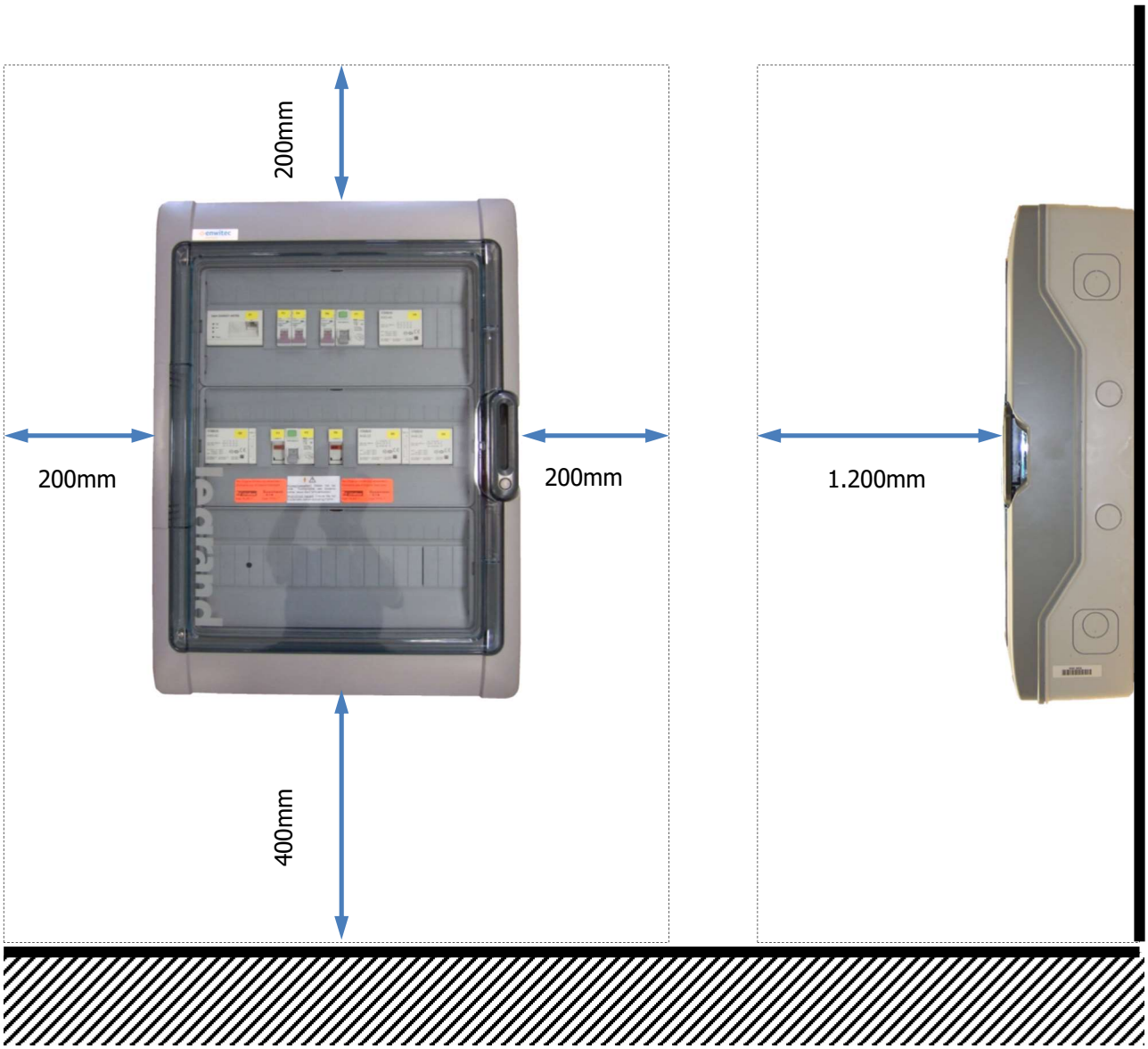

5.3 Dimensions and Cable Entry

5.3.1 Dimension and Fastening

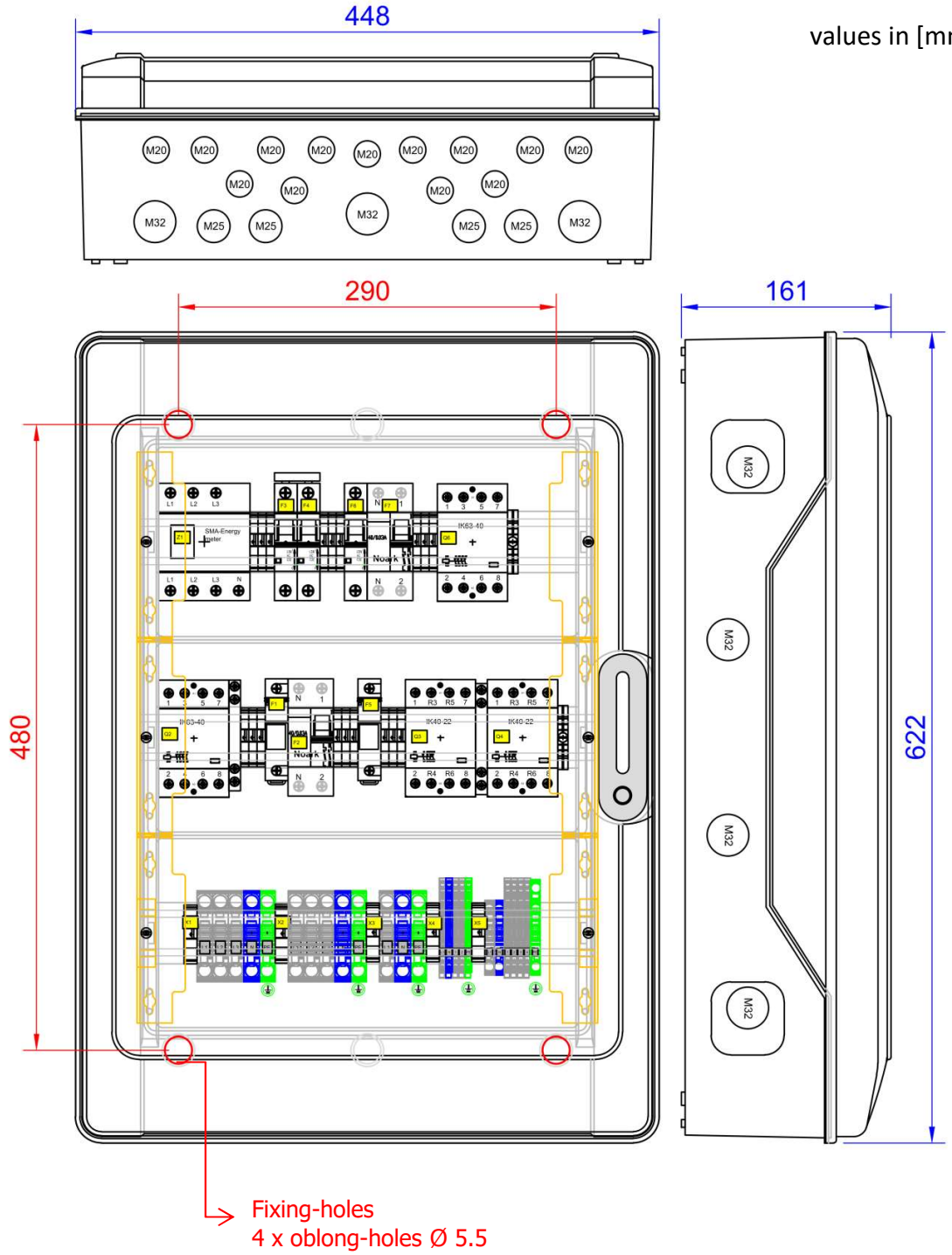

Select the correct mode of mounting, **<u>depending on the mounting surface</u>**, for example 4 x expansion anchor „S8“ + 4 x chipboard screw Ø5.5



5.3.2 Cable entry – Single-Phase Battery Backup Distribution

recommendation: Take the knockouts at the bottom

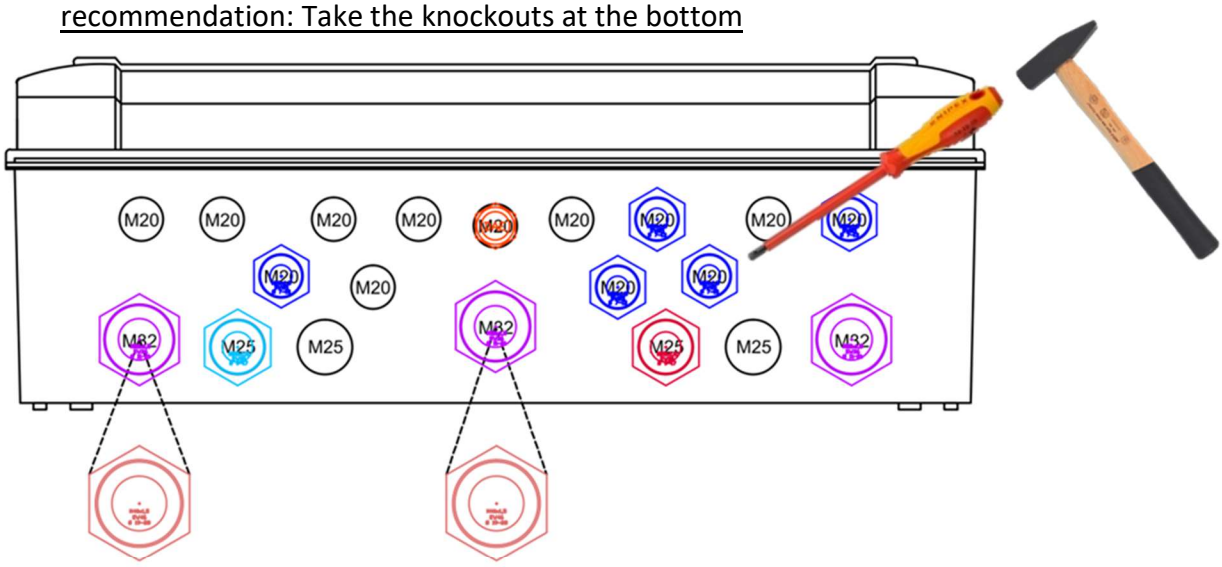

type	terminal block		cable (e.g.)
M40 + enlargement adaptor	X1 X2	alternatively	4 x 16mm² 5 x 16mm²
M32	X1 X2 X3		4 x 16mm² 5 x 16mm² 3 x 10mm²
M25 (special sealing)	speedwire-cable (E-Meter/Home-Manager)		-CAT 5/7e-
M25	X5		3 x 6mm²
M20	X4 – 2x (L1/N + 1/2) X5 (1/2) X5 (3/4) PE		3 x 1,5mm² 3 x 1,5mm² 4x2x0,8mm² *(e.g. J-Y(St)Y Lg)** 1 x 16mm²
M12	equalising membrane – mount on reduction-adaptor M20!)		

** shielded cable*

5.3.3 Cable entry – Three-Phase Battery Backup Distribution

recommendation: Take the knockouts at the bottom

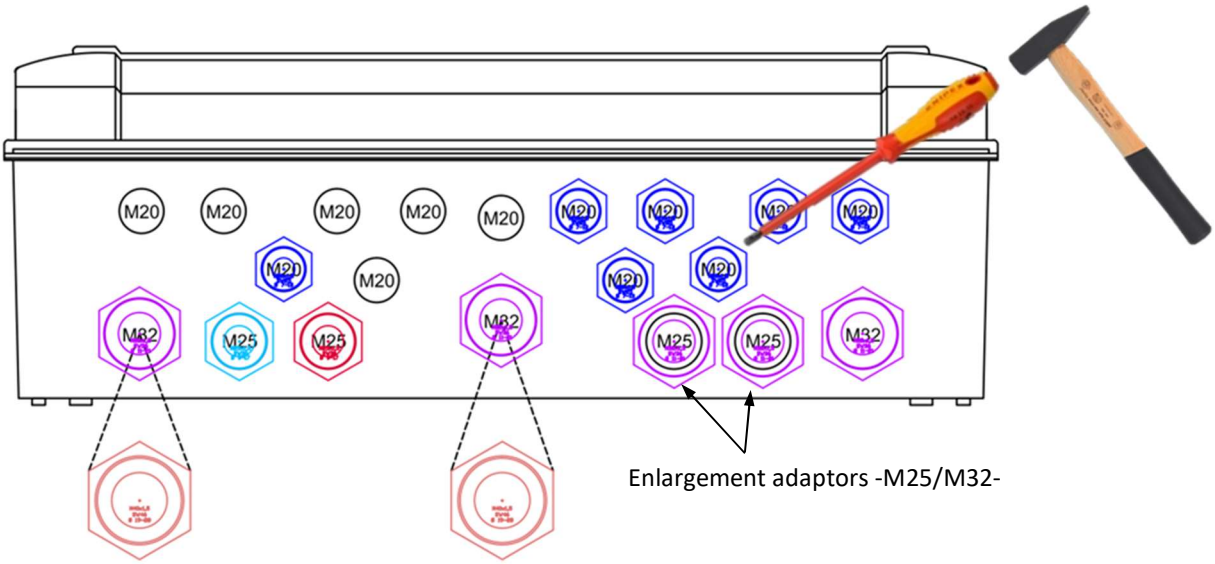

	type	terminal block		cable (e.g.)
	M40 + enlargement adaptor	X1 X2	alternatively	4 x 16mm² 5 x 16mm²
	M32	X1 X2 X3		4 x 16mm² 5 x 16mm² (3x) 3 x 10mm²
	M25 (special sealing)	speedwire-cable (E-Meter/Home-Manager)		-CAT 5/7e-
	M25	X5		3 x 6mm²
	M20	X4 – Master 2x(L1/N + 1/2) X4 – Slaves 2x(L2/N + L3/N) X5 – Master (1/2) X5 – Master (3/4) PE		3 x 1,5mm² 3 x 1,5mm² 3 x 1,5mm² 4 x 2 x 0,8mm² *(e.g. J-Y(St)Y Lg)** 1 x 16mm²

** shielded cable*

6. Connection compartment – layout terminals

6.1 Single-Phase Battery Backup Distribution

Exclusive usage of spring-loaded terminals! (WAGO Cage Clamp®)

terminal	litz-wire	max. cross section [mm²]	insulation stripping [mm]	wire-end sleeve
X1/X2/X3	solid	16	18-20	×
	finely stranded	25	18-20	×
	finely stranded	16	18-20	✓
X4	solid	2,5	8-9	×
	finely stranded	2,5	8-9	× or ✓
X5 (L1/N/PE)	solid	10	13-15	×
	finely stranded	10	13-15	×
	finely stranded	6	13-15	✓
X5 (1/2/3/4)	solid	2,5	8-9	×
	finely stranded	2,5	8-9	× or ✓

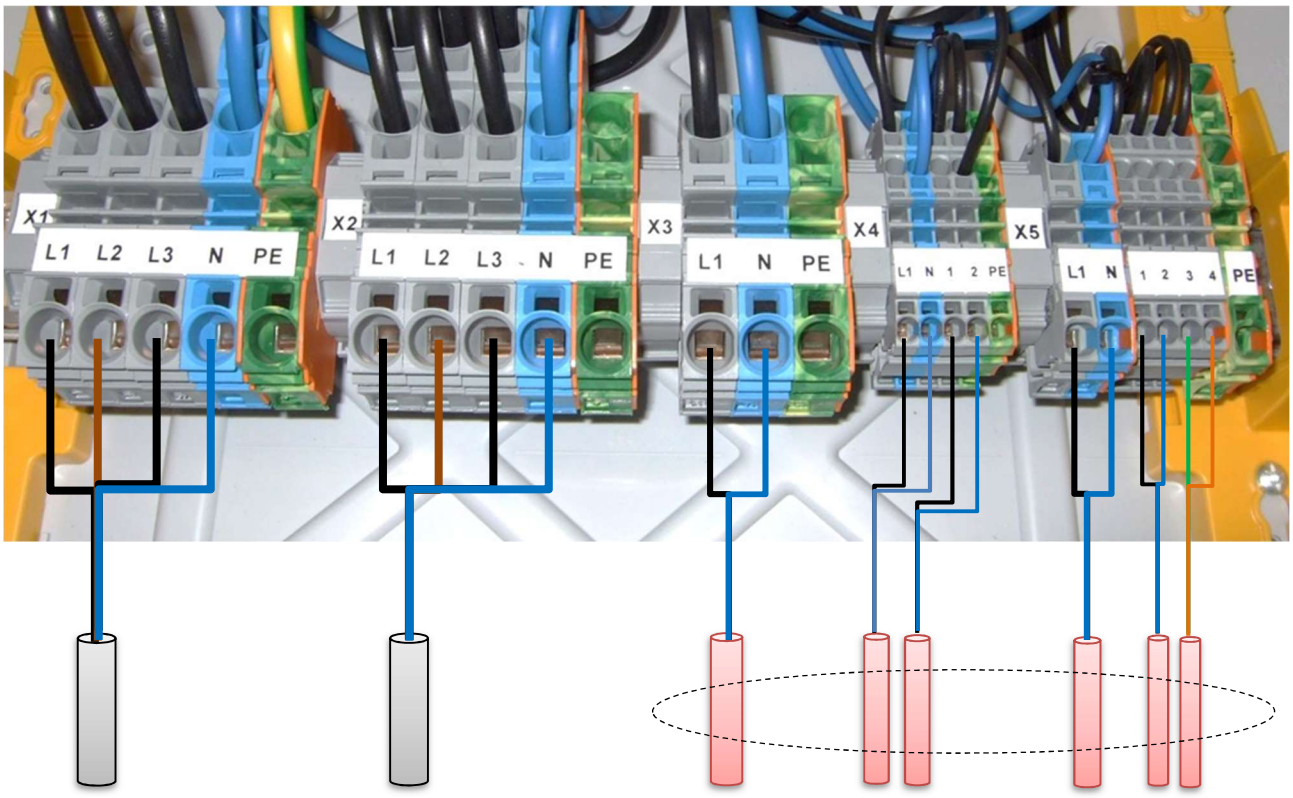

Mains supply Building's Distribution Sunny-Island

6.2 Three-Phase Battery Backup Distribution

Exclusive usage of spring-loaded terminals! (WAGO Cage Clamp®)

terminal	litz-wire	max. cross section [mm²]	insulation stripping [mm]	wire-end sleeve
X1/X2/X3	solid	16	18-20	×
	finely stranded	25	18-20	×
	finely stranded	16	18-20	✓
X4	solid	2,5	8-9	×
	finely stranded	2,5	8-9	× or ✓
X5 (L1/N/PE)	solid	10	13-15	×
	finely stranded	10	13-15	×
	finely stranded	6	13-15	✓
X5 (1/2/3/4)	solid	2,5	8-9	×
	finely stranded	2,5	8-9	× or ✓

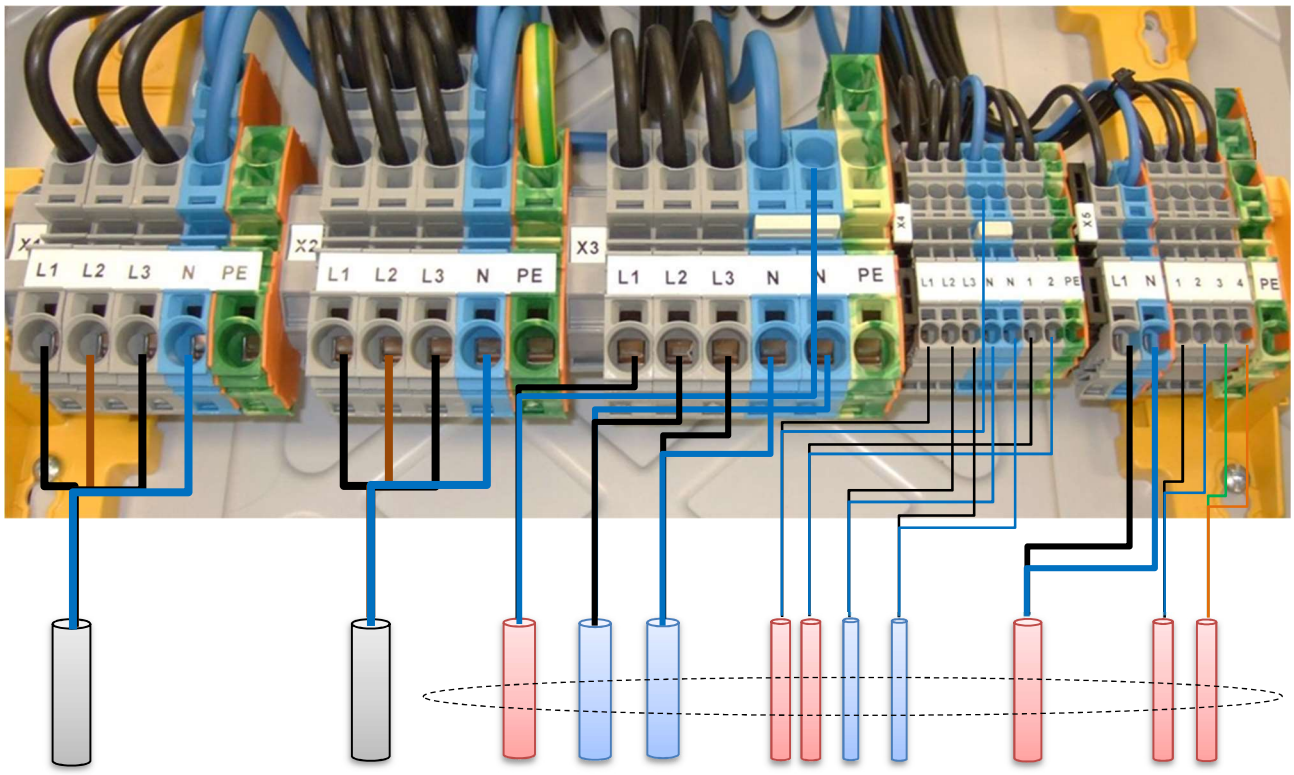

Mains supply

Building's distribution

Sunny-Island's

= „Master“

= “Slaves”

7. Protective Conductor Connections (PE)

The Battery Backup Distribution itself complies with protection class II!
PE-clamps within the connection compartment are not being used for protective grounding the Battery Backup Distribution!

⚠ WARNING

TT- and TN-S Distribution

You always have to do a PE-cabling, connected to the building's equipotential bus bar!
You always have to connect this PE-Cable with clamp "PE" on the terminal block "X1"!
Other PE clamps are distribution-clamps for the protective earth!

In case of backup-functionality, the contactor "Q2" achieves an all-pole disconnection to the main's supply (activated by the master-device Sunny Island). Immediately afterwards, the system is connecting the protective earth to the neutral conductor of the Island Grid –using Q3,Q4- and realises the "PEN" (**P**rotective **E**arthed **N**eutral) conductor.

In order to ensure a very short switch off time in case of failure, (IEC 60364-4-41), we have implemented the RCCB „F2" at the control circuit in general.

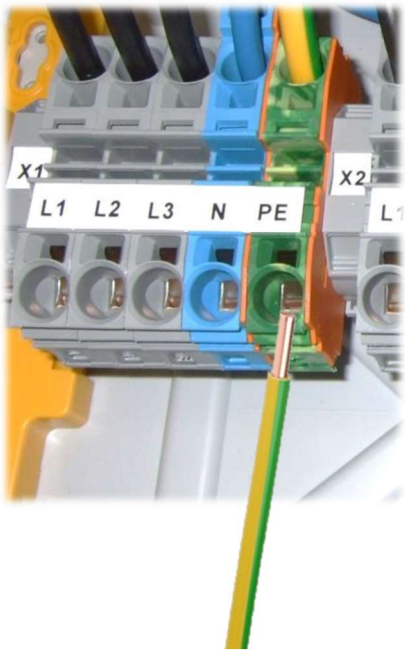

Connect the protective conductor (coming from the building's equipotential bus bar) with the PE-clamp on the terminal block "X1"!

Recommendation:
- solid/stranded
- cross section: 16mm^2

DANGER

Please note that there must always be a direct PE – cabling between your building's distribution and the main-equipotential bus bar. The PE-distribution within the Battery Backup Distribution does not replace this direct PE-wiring to your local electrical distribution board of the building!

TN-S-System

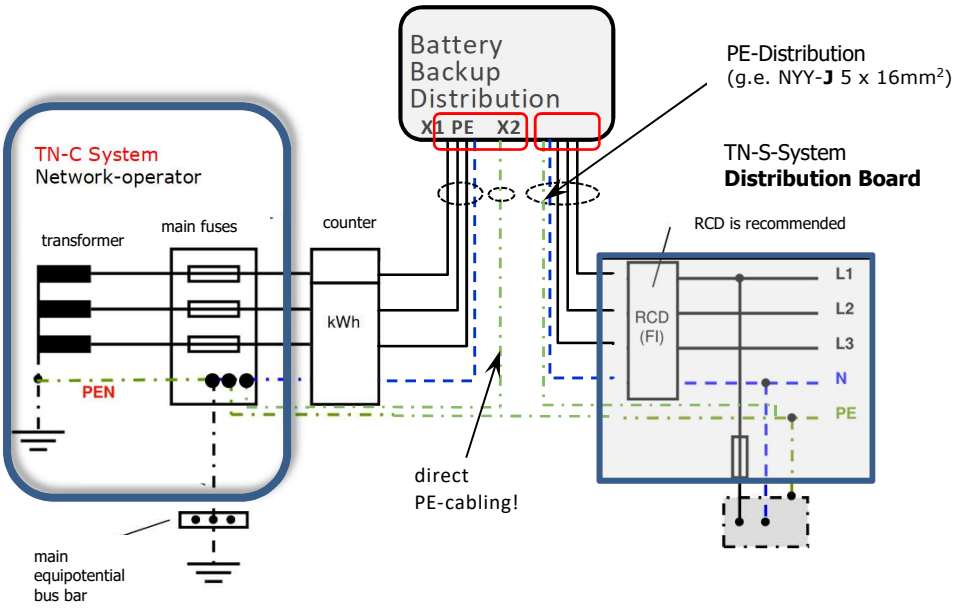

TT-System

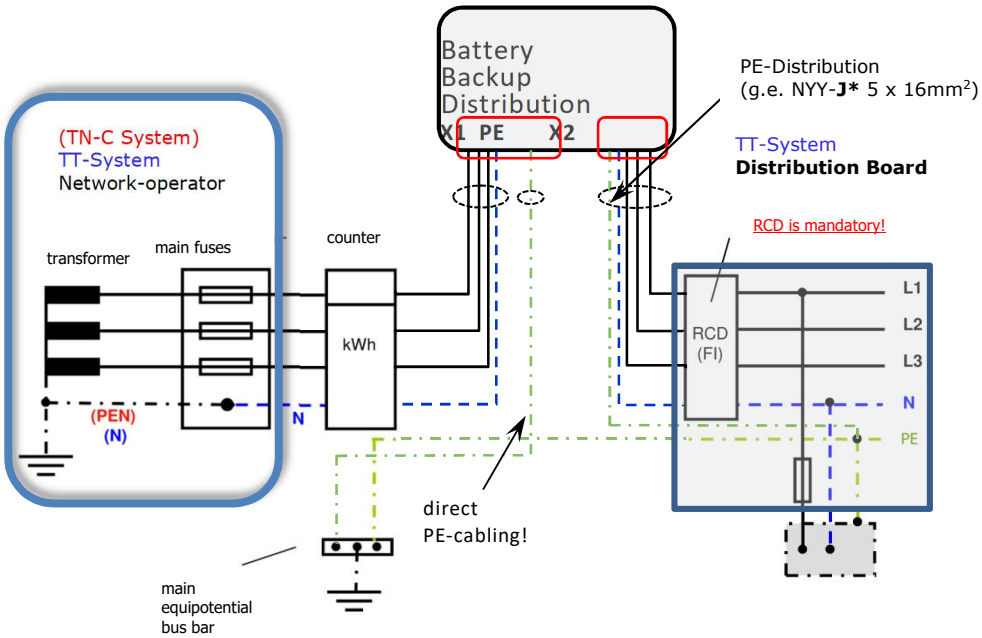

8. Phase coupling within Single-Phase „IPC“ version

In case of using the 1PH-Battery Backup Distribution „IPC“ (**I**nclusive of **P**hase **C**oupling), you will get the opportunity for coupling the backup-phase L1 to the other ones:

- L1 to L2 (circuit breaker “F3” activated)
- L1 to L3 (circuit breaker “F4” activated)
- L1 to L2 and L1 to L3 (circuit breaker “F3”+”F4” activated)

With the help of phase coupling, you are able to support the loads which are not connected to the physical feed in backup-phase “L1”. Phase coupling will be activated by Sunny Island controlled contactor “Q6”, if the main supply is in shutdown.



Destruction of 3-phase loads may occur during phase coupling!
Please connect Single-loads exclusively when phase coupling is activated!

- Only activate phase couplings for phases, whose power does not exceed the maximum power of the Sunny Island!

- Working with the help of phase coupling, please label this functionality inside your electrical distribution board! For this you will get a suitable warning sticker in the Sunny Island’s scope of delivery!



- Electric stove: Every single stove is working as a single-phase load within the line conductors "L1/L2/L3" and "Neutral". The backup functionality within phase coupling does not create a 120° phase shift! The occurring current in the neutral-conductor of the cable might get to high because of the missing phase shift! This could happen if several stoves are working. Take suitable measures to ensure that the operation of an electric stove is safe during the backup functionality (e.g. replacement of the 3-pole circuit breaker by an all-pole circuit breaker)!

Naturally, if main’s supply recurs, contactor “Q6” is doing the disconnection of the phase coupling.

9. Connecting the grid – Main Supply

Please consult in every way your low voltage network-operator!
Make sure that you fulfil all the established technical connection requirements and national standards of your country!

In particular, you have to ensure the continued safe and reliable operation of the networks and the exclusion of any additional risk for people and property!

- Connect the grid (L1/L2/L3/N) to the terminal block “X1”
- Connect the PE-cabling in accordance with Chapter -7-
- Make sure, that the maximum fuse rating* is **not more than 63A!**

* in case of main-supply pre-fuses are exceeding this value, you have to install additional fuses at a maximum value of 63A! (If this is the case, please take care about the “short circuit selectivity in [kA]” to the pre-fuse!) According to the pre-fuse value of 63A – we recommend a cable cross-section of 16mm^2 – e.g. cable NYY 4 x 16mm^2.

10. Connecting the Distribution Board (Load/PV)

10.1 Island-Mode (Backup Function)

During the island-mode, building’s distribution board protection devices against electric shock (like RCCB or RCBO) are ensuring furthermore, that there will be no risk for people within the consumer load circuits. Moreover, the Battery Backup Distributions “F7”-RCCB is an additional personal protection concerning the safety of the cabling (terminal block “X2”).

The network configuration (for the loads) during the island mode is the “TN-S” System. This is secured through an implemented (within the Battery Backup Distribution) “Earthing Device”. Contactors “Q3” and “Q4” are doing the “PEN-connection” in a safe way, regulated by the Sunny Island.

DANGER

There might be circumstances for a non-tripping of some distribution board’s protection devices! Pay attention to this and have a look at the SMA paperwork!

10.2 Grid-mode

While grid-mode is working, building's distribution board protection is exclusively responsible for the people's protection against electric shock within the consumer load circuits.

Nominal thermal power!
(rated power)

Make sure, that your nominal thermal power never become more then the max. values – please have a look at chapter -18- "Technical Data"

$$P_{Nominal\ thermal\ max.} = \sum (+P_{Consumption\ max.}) + (-P_{Feed\ In\ max.})$$

During the grid mode, the electrical energy (for the load) is passing through the Battery Backup Distribution. Surplus-Energy produced by the PV-Panels will be feeded in optionally.
The algebraic sum of both power-values:

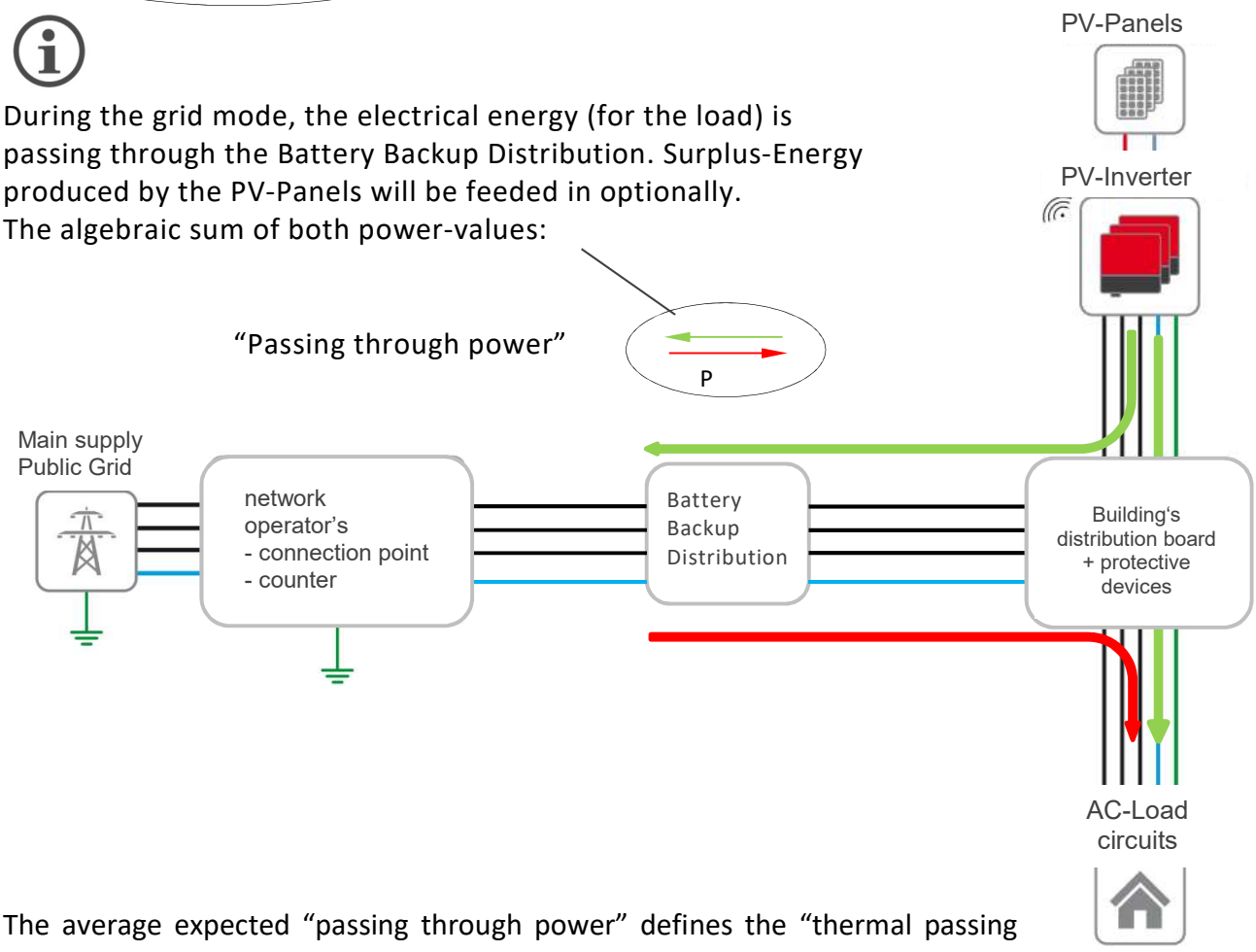

The average expected "passing through power" defines the "thermal passing through power" or better said nominal power. The occurring power peaks of the loads or respectively coming from the PV-panels might get higher. The limiting value for the peak power is defined as the max. peak current given by the required pre-fuses (Look at Chapter -18- "Technical Data").

CAUTION

Thermal nominal power [kW] and peak current [A] may not be exceeded! – Please observe the technical data at Chapter -18-

Please note that the pre-fuse for the main supply (acc. Chapter -9-) also determines simultaneously the cross section of the "X2" cable to the building's distribution board. In this case we also we recommend the cross-section of 16mm² – e.g. cable NYY 5 x 16mm² (within PE).

11. Connecting the Sunny Island's

11.1 Terminal Block X3

The Battery Backup Distribution ensures the protection of Sunny Island's "AC2 – grid terminals" with the help of the circuit breaker "F6" (32A – "C" characteristic; 1-pole breaker for 1PH-BBDAP and accordingly the 3-pole breaker for 3PH-BBDAP).

We recommend a cable-cross section of 6mm² for the Sunny Island connection, even better 10mm² in order to achieve a high efficiency at peak power conditions (e.g. NYY-J 3x6mm² or 3x10mm²)

11.2 Terminal Block X4/X5

The terminals for the Sunny Island's control-in/outputs are suitable for a cross-section up to 2,5mm².

NOTICE

- *X5 "L1/N/PE":* Please use a cross-section of at least 6mm²!
  (Background: The Sunny Island is capable to induce a high short circuit current into a damaged cable - this may cause a cable fire if the copper cross section is undersized)
- X5 "3/4": Please use a shielded cable!

Cable-types below could be used:

Single-Phase Battery Backup Distribution

terminal	cable-type	functionality
X4 „L1/N" + „1/2"	NYM-J 3 x 1,5mm²	Relay 1 + ExtVtg
X5 „1/2"	NYM-J 3 x 1,5mm²	Relay 2
X5 „3/4"	J-Y(St) Lg e.g. 4x2x0,8mm²	DigIn/BatVtgOut
X5 "L1/N"	NYM-J 3 x 6,0mm²	AC1 – L/N/PE

Three-Phase Battery Backup Distribution

terminal	cable-type	functionality
X4 „L1/N" + „1/2"	NYM-J 3 x 1,5mm²	Relay 1 + ExtVtg **Master**
X4	NYM-J 3 x 1,5mm²	ExtVtg **Slave 1**
X4	NYM-J 3 x 1,5mm²	ExtVtg **Slave 2**
X5 „1/2"	NYM-J 3 x 1,5mm²	Relay 2 **Master**
X5 „3/4"	J-Y(St) Lg e.g. 4x2x0,8mm²	DigIn/BatVtgOut **Master**
X5 „L1/N"	NYM-J 3 x 6,0mm²	AC1 – L/N/PE **Master**

12. Speedwire-connection – Home Manager/Energy-Meter

Connect a suitable network-cable (our recommendation: type “Cat.5e” -or even better “Cat.7”- is a very established twisted pair solution) to the network jack on the front of the SMA Home-Manager respectively the SMA Energy-Meter.

Take the M25 cable gland with the included special sealing insert (sealing is divided for pushing through the RJ45 connector) for installing the network-cable!

Pre-drilled blanks for inserting the cable!



13. Initial Operation

Preconditions

- ☑ Battery Backup Distribution is solidly mounted!
- ☑ All the required cables are connected correctly!
- ☑ PE-cabling to the main equipotential bus bar is done!
- ☑ Perform all the electrical tests in accordance with your national standards! e.g. insulation test, protective grounding test….
- ☑ Document the test results for archiving in accordance with your national standards!

Procedure

☑ Carry out the procedure in accordance with the **Original-SMA-System documentation and paperwork!**

☑ After your successful system-commissioning and tightening of the cover screw's: Please attach the provided stick-on label alongside the Battery Backup Distribution!

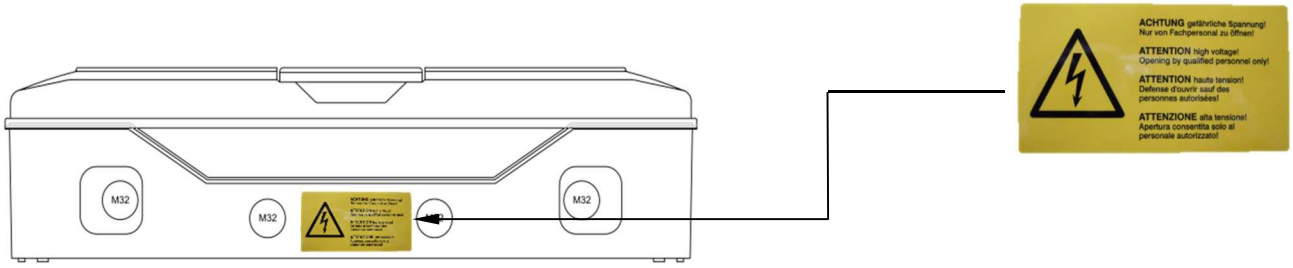

☑ Place the label with the image for an "island mode system ability"(risk of dangerous voltage applied even if the public grid is disconnected!); this label is included in the scope of delivery. Please place it either on the domestic junction box or at the counter/meter board.

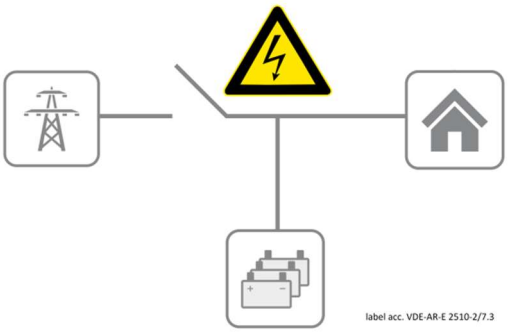

14. Disconnect from voltage

WARNING

1) <u>Disconnect terminal block X3</u>

Disconnect the Sunny Island's (look at the Original SMA System documentation!) and secure against accidental reconnection!

2) <u>Disconnect terminal block X1</u>

Remove the pre-fuses (resp. deactivate the circuit-breakers) coming from the main supply (public grid) and secure against accidental reinstallation and/or reconnection!

3) *<u>Disconnect terminal block X2</u>***

Remove the fuses (resp. deactivate the circuit-breakers) coming from your PV-inverter and/or your building's distribution board and secure against accidental reinstallation and/or reconnection!

Eventually, verify and check that there will be no voltage and secure the complete system against accidental reconnection!

15. Maintenance and cleaning (spare-fuse)

You should do a frequent short inspection of your Battery Backup Distribution for keeping a long durability and avoiding an operational breakdown of the system. Please also consider your national standards and provisions regarding the requirements of PV-power installations and their equipment. Potentially, you have to do an electrical test procedure once a year, as it is to adduce in Germany.

If you notice faulty fuses: There must be a reason for that – please check your electrical installation and ensure the proper functionality of the affected electric circuit ("F1" and "F5": Ferrule Fuses!)
This fuse characteristic is mandatory regarding the ferrule-fuse "F1" + "F5":

⚠CAUTION

- nominal cold resistance: >= 0,2 Ω
- max. melting integral: $1A^2s$
- enwitec part-number: 10010783

} e.g. "Littelfuse KLKD 1A"

Visual inspection

Dependent on the installation side and the environmental conditions you have to expect pollution on the devices surface. Clean carefully with the help of a moist cloth! During this time do not open the case of the device under any circumstances (transparent cover has to be closed)!

Concerns only 3-PH Battery Backup Distribution: You have to check the outlet-filters in addition! Please have a look at the air-inlet; in case of a dirt buildup
you have to clean carefully with the help of a moist cloth!



16. How to stock the Battery Backup Distribution

Demands

- ☑ Dry conditions
- ☑ Ambient air temperature ranges from -25°C up to +55°C
- ☑ For a maximum of 24 hours: temperature might get higher up to +70°C

17. Disposal

Disposal is due to your national/local regulations. The Battery Backup Distribution is to classify as “Electronic waste” (it is no “Household waste”!)
Take care about that and protect the environment!

18. Technical Data

18.1 Single-Phase BBDAP

General Information

Nominal voltage	230/400V AC
Nominal frequency	50/60Hz ± 5%
Max. number of Sunny Island‘s	1 (1-PH)
Permitted grid structure (main supply)	TT/TN-S
Max. prospective* short circuit current	10kA (excl. of SMA Home-Manager/Energy-Meter)
	6kA (incl. of SMA Home Manager/Energy-Meter)
Max. value of pre-fuses (main supply)	63A
Max. permitted thermal power resp. Nominal power (3PH “passing through power”)	20kW
Ambient temperature range	-25°C… +40°C
Humidity	5%... 95%
Protection against electric shock (IEC 61140)	II
Ingress protection rating (IEC 60529)	IP65
Dimensions (width x height x depth)	448 x 622 x 161 [mm]
Weight ca.	11,5 [kg]
Product standard *prospective short-circuit characterizes the max. uninfluenced short circuit current of the network-connecting point (mains supply)	IEC/EN61439-1 "Low-voltage switchgear and controlgear assemblies" IEC/EN61439-2 "Power switchgear and controlgear assemblies" IEC/EN61439-3 "Distribution boards intended to be operated by ordinary persons (DBO)"

Connection

Terminal-Blocks — Exclusively spring loaded clamps (WAGO Cage Clamp®)

SMA-Energy-Meter/Home Manager — Connector “RJ45”;cable gland M25 (special sealing invert)

litz cross section [mm²]					cable gland	
terminal block	solid	finely stranded	finely stranded with wire-end sleeve	stripping length [mm²]	dimension (metric)	clamping range [mm]
X1	16	25	16	18-20	M32 M40	13-21 16-28
X1-PE	16	25	16	18-20	M20	6 - 13
X2	16	25	16	18-20	M32 M40	13-21 16-28
X3	16	25	16	18-20	M32	13-21
X4	2,5	2,5	2,5	8-9	M20	6-13
X5 "L1/N/PE"	10	10	6	13-15	M25	9-17
X5 "1/2/3/4"	2,5	2,5	2,5	8-9	M20	6-13

SMA-Documents to consider in addition:

☑ „Flexible Storage System“ within Battery Backup Function
☑ Planning guideline(s)/quick reference guide
☑ Installation Guide Sunny Island‘s SI 4.4M/6.0H/8.0H

18.2 Three-Phase BBDAP

General Information

Nominal voltage	230/400V AC
Nominal frequency	50/60Hz ± 5%
Max. number of Sunny Island‘s	3 (3-PH)
Permitted grid structure (main supply)	TT/TN-S
Max. prospective* short circuit current	10kA (excl. of SMA Home-Manager/Energy-Meter)
	6kA (incl. of SMA Home Manager/Energy-Meter)
Max. value of pre-fuses (main supply)	63A
Max. permitted thermal power resp. Nominal power (3PH “passing through power”)	35kW
Ambient temperature range	-25°C… +40°C
Humidity	5%... 70%
Protection against electric shock (IEC 61140)	II
Ingress protection rating (IEC 60529)	IP44 (outlet-filter!)
Dimensions (width x height x depth)	448 x 622 x 161 [mm]
Weight ca.	12,0 [kg]
Product standard *prospective short-circuit characterizes the max. uninfluenced short circuit current of the network-connecting point (mains supply)	IEC/EN61439-1 "Low-voltage switchgear and controlgear assemblies" IEC/EN61439-2 "Power switchgear and controlgear assemblies" IEC/EN61439-3 "Distribution boards intended to be operated by ordinary persons (DBO)"

Connection

Terminal-Blocks — Exclusively spring loaded clamps (WAGO Cage Clamp®)

SMA-Energy-Meter/Home Manager — Connector “RJ45”;cable gland M25 (special sealing invert)

litz cross section [mm²]					cable gland	
terminal block	solid	finely stranded	finely stranded with wire-end sleeve	stripping length [mm²]	dimension (metric)	clamping range [mm]
X1	16	25	16	18-20	M32 M40	13-21 16-28
X1-PE	16	25	16	18-20	M20	6 - 13
X2	16	25	16	18-20	M32 M40	13-21 16-28
X3	16	25	16	18-20	3xM32	13-21
X4	2,5	2,5	2,5	8-9	3xM20	6-13
X5 "L1/N/PE"	10	10	6	13-15	M25	9-17
X5 "1/2/3/4"	2,5	2,5	2,5	8-9	M20	6-13

SMA-Documents to consider in addition:

- ☑ „Flexible Storage System“ within Battery Backup Function
- ☑ Planning guideline(s)/quick reference guide
- ☑ Installation Guide Sunny Island‘s SI 4.4M/6.0H/8.0H

19. EC Declaration of Conformity

the product

Type designation (enwitec electronic - match code)

manufacturer	enwitec electronic GmbH & Co. KG Scherrwies 2 84329 Rogglfing - Lower Bavaria/Germany
description	**Battery-Backup-Distribution**

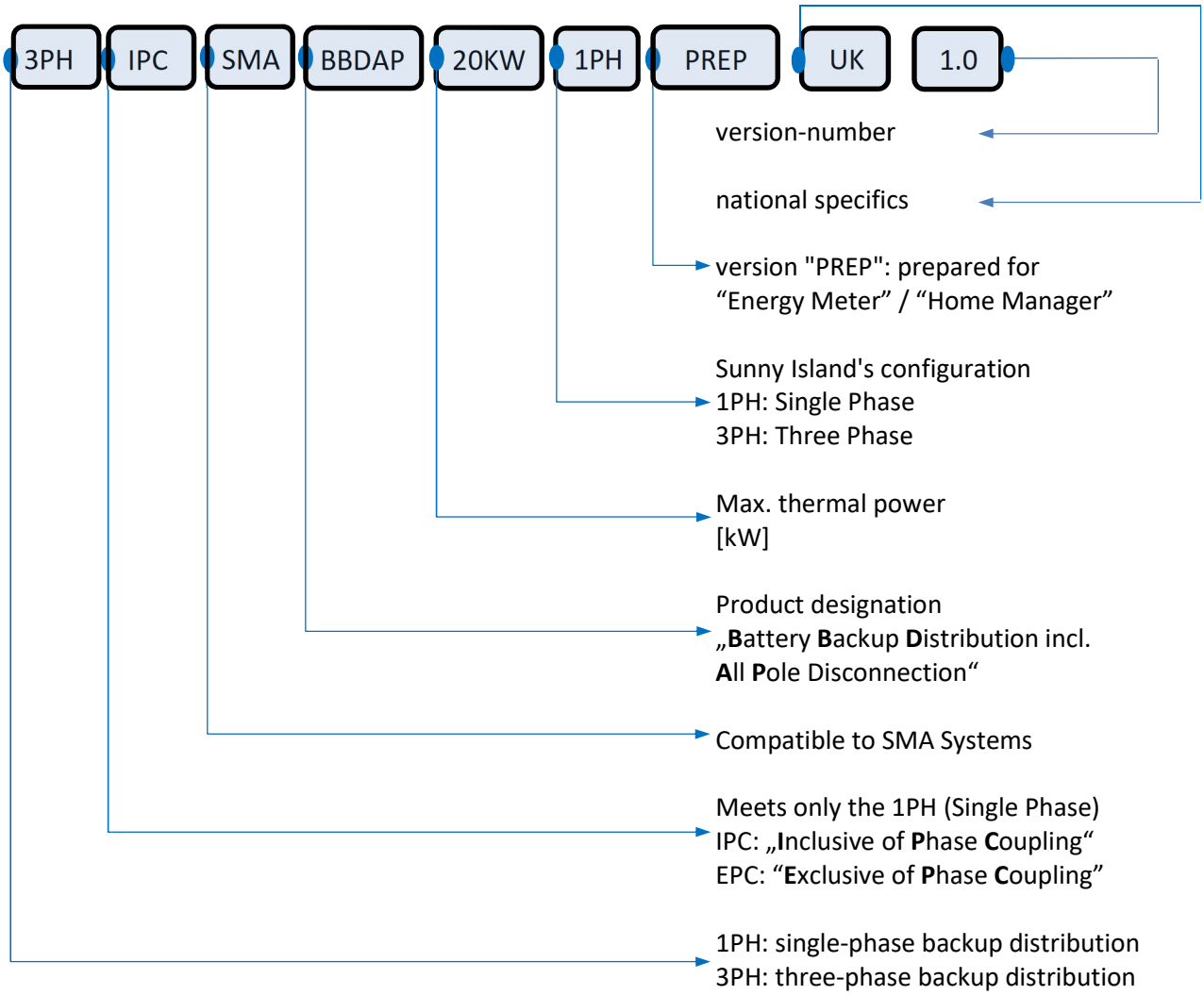

to which this declaration relates is in conformity to the following standard(s) or normative document(s):

Standard

IEC/EN 61439-1 (VDE 0660-600-1: 2016-10)
"Low-voltage switchgear and controlgear assemblies"

IEC/EN 61439-2 (VDE 0660-600-2: 2016-10)
"Power switchgear and controlgear assemblies"

IEC/EN 61439-3 (VDE 0660-600-3: 2013-02)
"Distribution boards intended to be operated by ordinary persons (DBO)"

and is in accordance with the provisions of the following EC-directive(s):

Low voltage directive (LVD) 2014/35/EU
Restriction of Hazardous Substances Directive (RoHS) 2011/65/EU

Year of affixing CE-Marking: **2014**

Date of issue: **24.08.2017**

enwitec electronic GmbH & Co. KG



signature

Johann Wimmer
CEO

Our services

PV connection technology
Generator connection boxes, AC/DC distribution units, protective circuitry, monitoring, grid and system protection

Energy storage systems
Island and emergency backup systems, battery protection, automatic transfer switches

Contract manufacturing
Electrical assemblies, switch cabinet construction, processing of casings, cable manufacture, assembly of complex components for power storage solutions

enwitec electronic GmbH & Co.KG
Scherrwies 2
84329 Rogglfing
Germany

Telephone +49 8725 9664-0
Fax +49 8725 966-96
info@enwitec.eu
www.enwitec.eu

The text and the illustrations are up to date at the time of printing, we reserve the right to make changes. All information is given without guarantee. Liability is excluded.
© enwitec 2018