QUICK **INSTALL** GUIDE **(Models ENCHARGE-3T-1P-INT and ENCHARGE-10T-1P-INT)**

ENPHASE.

Install the Enphase **Encharge Storage System**

To install the Enphase **Encharge 3T**™ storage system or **Encharge 10T**™ storage system and the Enphase wall-mount bracket, read and follow all warnings and instructions in this guide. Safety warnings are listed on the back of this guide. These instructions are not meant to be a complete explanation of how to design and install an energy storage system. All installations must comply with national and local electrical codes and standards. **Only qualified electricians shall install, troubleshoot, or replace the Encharge 3T or Encharge 10T.**

The Encharge™ storage system includes the Enphase Encharge Battery(ies) with integrated Enphase IQ™ Microinverters. The Enphase Envoy™ communication gateway measures PV production and home energy consumption. The Encharge storage system senses when it is optimal to charge or discharge the battery so that energy is stored when it is abundant and used when scarce.

Unique installation scenario is shown below:

Self consumption, grid tied.
The preferred configuration when adding battery storage and PV for self consumption in a grid-tied application with no option for backup during outages. PV and Encharge will not operate when the grid is unavailable.

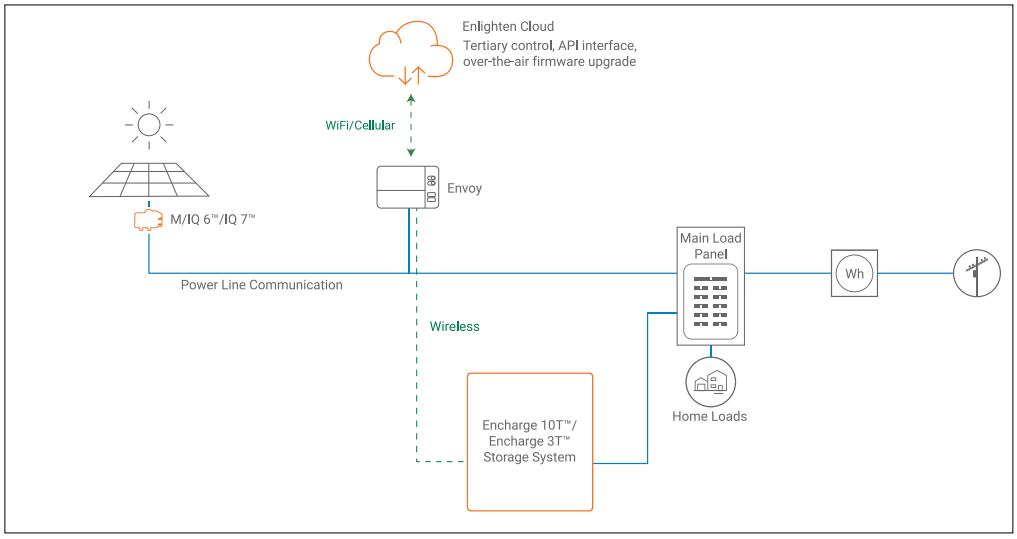

PREPARATION

A) Inspect the packaging and the Encharge Battery(ies) for damage, such as cracks, dents, or leaking electrolyte. **Do not install or use the Encharge Battery(ies) if it has been damaged in any way**. If damaged, contact your distributor for replacement.

B) Ensure that your kit includes the following Encharge components:
- The **Encharge 10T** includes three batteries and two interconnect cable assemblies, an Encharge 10T triple-width cover, and a triple-width mounting bracket.
- The **Encharge 3T** includes one battery, and single-width cover with a single-width mounting bracket.

NOTE: Check the "Energize By" label on the shipping box to verify that the Encharge Battery(ies) will be installed by the date shown. If the date has passed, contact your distributor for next steps.

⚠ **WARNING**: Risk of injury. Take care when lifting. The Encharge Battery unit is heavy (40.5 kg) and requires two persons to lift.

C) Ensure you have the following **required Enphase items**:
- The Enphase Encharge system requires an Internet connection through the Envoy. Failure to maintain an Internet connection may have an impact on the warranty. See enphase.com/warranty for full terms.
- Wireless communications kit (COMMS-KIT-EU-01) to be installed at the Envoy for communications with Encharge. Includes USB cable for connection to Envoy along with communication extender and allows wireless communication with Encharge

D) Make sure you also have the following **required items**:
- Mounting location that is structurally suited to bear the weight of the Encharge Battery(ies). Total weight for the Encharge 3T, including the Encharge base unit, cover and wall mount bracket, is 48.8 kgs. Total weight for the Encharge 10T, including the three Encharge base units, cover, and wall mount bracket, is 143.6 kgs.The wall must contain blocked studs that can bear the battery weight or can be of masonry or other suitable structure.
- Tools: conduit (with fittings and fitting tools), drill, 4 mm pilot bit, screwdriver, socket wrench, torque wrench, level, wire stripper, and stud finder if installing on studs.
- Fasteners for wall mount bracket. Slots are 9.2 mm. Check with a structural engineer and local standards for requirements:
  - Single-width bracket for Encharge 3T: A minimum of three #8 mm lag bolts or screws, 7.6 cm long (depending on attachment wall).
  - Triple-width bracket for Encharge 10T: A minimum of nine #8 mm lag bolts or screws, 7.6 cm long (depending on attachment wall).
- Washers for use between fastener heads and wall-mount bracket.
- Copper conductors: 2.5 - 10 mm^2 (11mm strip length) copper conductors (rated at 75° C or 90° C) for terminals.
- Conduit fittings: 12 mm or 20 mm (left side) terminators are required for all installations, and IP54 conduit fittings are needed when installing outdoors.
- Over current protection: The overcurrent protection in Encharge is not branch circuit overcurrent protection and cannot be relied upon for that purpose. The branch circuit overcurrent protection SHALL be located separately.
- Personal protective equipment (PPE) for handling lithium batteries as required by local safety standards.
- Protective gloves for protection against sharp edges.

E) Verify that main service is 230 V L-N. Encharge batteries cannot be installed between L1 and L2.

F) Note that the rated energy capacity of the battery is 3.5 kWh.

G) Install the PV system as directed by the Enphase installation manuals.

140-00206-04

© 2021 Enphase Energy. All rights reserved. Enphase, the Enphase logo, Encharge storage system, Envoy, IQ microinverter, Installer Toolkit, Enlighten and other trademarks or service names are trademarks of Enphase Energy, Inc. Data subject to change. Rev 04 - 07-20-2021

INSTALLATION

1 Plan a location for the Encharge batteries

The Encharge housing is IP55 and can be installed indoors or outdoors. The terminal blocks accepts copper conductors of 2.5 - 10 mm^2.

A) **Following local standards,** choose a well-ventilated location where the ambient temperature and humidity are within -15° C to 55° C and 5% to 100% RH, non-condensing, preferably out of direct sunlight. The optimum ambient temperature range for installation location is 0° C to 30° C. Provide smoke alarms in the residence in accordance with building, fire and installation codes.

B) **Ensure that the mounting location can sustain the total weight of the Encharge batteries and mounting bracket.** Total weight for the Encharge 3T, including the Encharge base unit, cover and wall mount bracket, is 48.8 kgs. Total weight for the Encharge 10T, including the three Encharge base units, cover, and wall mount bracket, is 143.6 kgs.

⚠ **WARNING:** The installer should install blocking between studs to ensure that no single stud carries the entire weight load of the Encharge batteries.

C) Plan the mounting location to be at least 15 cm off the ground and 15 cm from the ceiling. Keep the Encharge away from falling or moving objects, including motor vehicles.

⚠ **WARNING:** If mounted in the path of a motor vehicle, we recommend a mounting height that is 91 cm minimum above the floor.

D) Ensure that there are no pipes or electrical wires where you plan to drill.

E) Plan to maintain at least 1 m of clearance in front of each Encharge. Allow at least 15 cm clearance on top and bottom of the Encharge so that the vents on the top and bottom of the units are not blocked for air circulation.

F) Consider the dimensions of the Encharge batteries, easy access, height, and length of cable when selecting the location.

G) Follow all local standards.

H) Up to two Encharge 10T (or six Encharge 3T) units can be daisy chained on one circuit. For installations with more than this number of units, there must be a separate load center, subpanel, or circuit combiner with over current protection to combine the daisy chained circuits. You must select proper conductors and AC breaker for these circuits according to local codes, standards, and other applicable requirements.

The subpanel could be a small, two circuit box with circuit breakers. The circuit breakers in the box would have to be suitable for back-feeding, per local grid connection regulations.

Select the right size subpanel and breakers based on the number of Encharge units being installed.

To do this, you must purchase an off-the-shelf subpanel and install as shown in the following image:

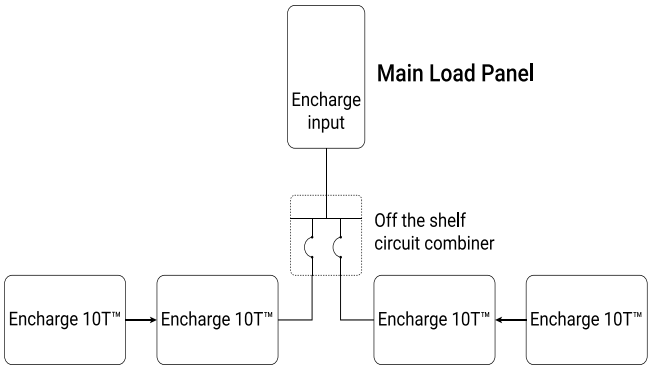

⚠ **WARNING!** Parallel power production sources only. Do not connect load circuits.

2 Install the AC disconnect

Following all local codes and standards:

A) Install an AC isolator that can break the maximum rated current of the branch circuit under load. The AC isolator must be installed in line-of-sight of Encharge, per local regulations.

B) Each Encharge unit is suitable for use with up to 10 mm^2 wires on a maximum 40 A branch circuit.If more than six Encharge 3T or two Encharge 10T are installed, a separate subpanel must be installed between the Encharge units and main panel to combine the Encharge circuits together. All circuit breakers in the subpanel must be suitable for back-feeding, per local grid connection regulations.

C) Verify that AC voltage at the site is within range: single-phase L to N voltage must measure between 184 and 253 VAC.

3 Prepare to install the wall-mount bracket

A) Make sure that the planned position for the wall-mount bracket meets clearance requirements as shown. The image depicts a single-width bracket for the Encharge 3T, but clearances and requirements are the same when installing a triple-width bracket for the Encharge 10T.

B) Ensure that the mounting location can sustain the weight of the Encharge batteries and mounting bracket. Total weight for the Encharge 3T including the mounting brackets and cover is 48.8 kgs, while the total weight for Encharge 10T including the mounting bracket and cover add up to 143.6 kgs.

C) Starting at installation position closest to the power source, mark a level line on the wall as a guide.

⚠ **WARNING!** Multiple risks. Make sure not to drill or attach into electric wiring or pipes that are in the wall!

Mounting on vertical stud

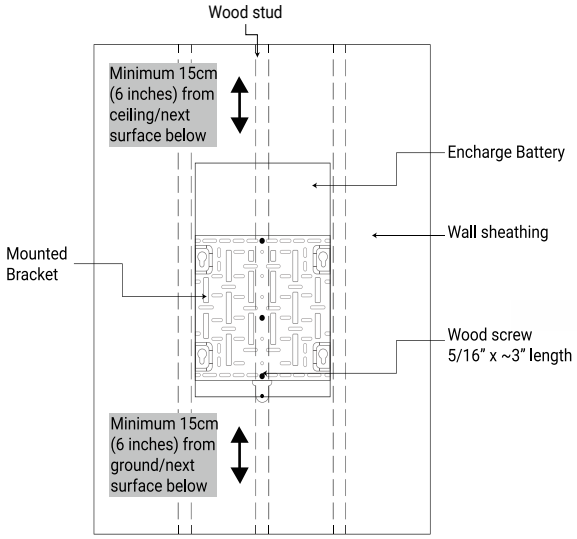

Encharge battery

NOTE: The above shown image is just for reference. Use other slots on the wall mount if additional fixing is required for stability (To be assessed by the installer).

4 Install the wall mount bracket(s)

Follow the instruction below for the type of bracket that you are installing.

⚠ **WARNING!** Risk of injury and equipment damage. Attach the wall mount to the wall so that it is no more than five degrees from vertical. See the following image for reference:

Allowable tilt from vertical for Encharge installation:

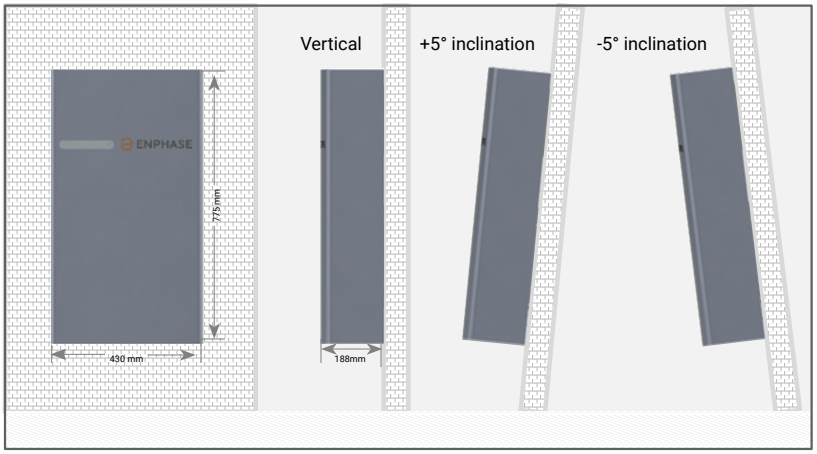

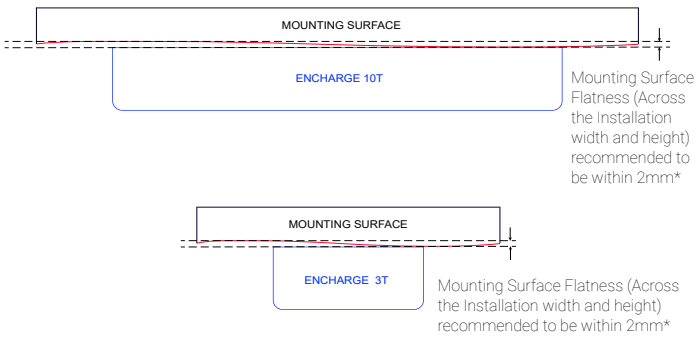

* If the difference in flatness is more than 2mm, recommend installing a substructure like unistrut for better alignment of the units.

Encharge 3T — single-width bracket

A) Place the wall-mount bracket on the wall so that the mounting holes of the bracket align with the center of the stud.

⚠ **WARNING!** Risk of injury and equipment damage. Use the unit mounting holes only to mount the base unit of Encharge to the wall mount. Do not use the unit mounting holes to secure the bracket to the wall.

B) Use a level to keep the bottom of the wall-mount bracket level.

C) Use #20(8 mm) screws (or masonry attachments for masonry) to attach the bracket using one screw and washer for each slot (9.2mm). Use a minimum of three screws in each mounting bracket. Tighten all screws to manufacturer's specified torque values.

D) Verify that the wall-mount bracket is solidly attached to the wall.

⚠ **WARNING!** Risk of injury and equipment damage. Do not mount an Encharge 3T on a bracket that is not properly mounted.

E) If installing additional batteries, install adjacent wall-mount brackets, as needed. Be sure to align the mounting holes in the wall-mount bracket to the center of the wall stud. You may install another row of brackets above the one already installed. Maintain at least 15cm vertical clearance between rows of Encharge installations, and ensure that the wall can support the structural load (weight) of the installation.

⚠ **WARNING!** Risk of injury and equipment damage.

Single-width mounting bracket

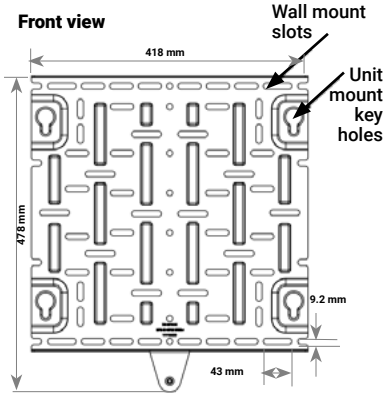

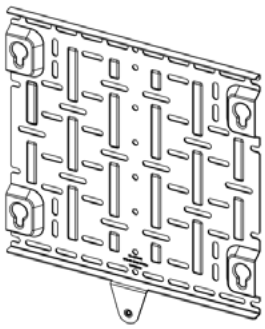

Encharge 10T — triple-width bracket

A) Place the wall-mount bracket on the wall so that the mounting holes of the bracket align with the center of the stud, and the mounting holes on the left and right align with the adjacent studs.

⚠ **WARNING!** Risk of injury and equipment damage. Use the unit mounting holes only to mount the base unit of Encharge to the wall mount. Do not use the unit mounting holes to secure the bracket to the wall.

Triple-width mounting bracket

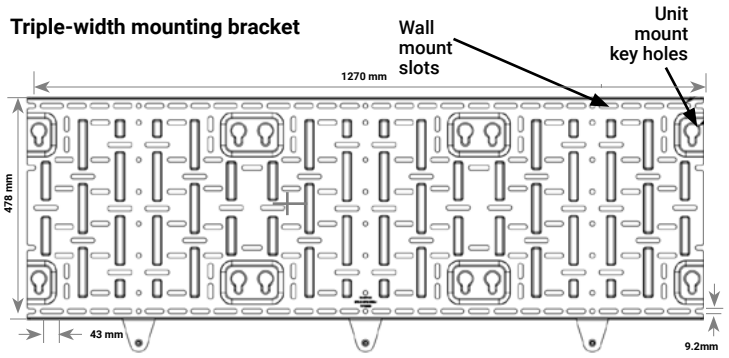

B) Use a level to keep the bottom of the wall-mount bracket level.

C) Use #20(8 mm) screws (or masonry attachments for masonry) to attach the bracket using one screw and washer for each slot (9.2mm). Use a minimum of nine screws in each mounting bracket to support the three Encharge battery units. There is an array of slots so that you can choose those that allow you to mount the bracket on studs. Tighten all screws to manufacturer's specified torque values.

D) Verify that the wall-mount bracket is solidly attached to the wall.

⚠ **WARNING!** Risk of injury and equipment damage. Do not mount Encharge 10T batteries on a bracket that is not properly mounted.

E) If installing additional batteries, install adjacent wall-mount brackets, as needed. Be sure to align the mounting holes in the wall-mount bracket to the center of the wall stud. You may install another row of brackets above the one already installed. Maintain at least 15 cm vertical clearance between rows of Encharge installations, and ensure that the wall can support the structural load (weight) of the installation.

⚠ **WARNING!** Risk of injury and equipment damage.

5 Mount the Encharge Battery(ies) on the wall

⚠ **WARNING**: Risk of injury. Take care when lifting.
Each Encharge battery base unit is heavy (40.5 kgs) and requires two persons to lift.

⚠ **WARNING!** Risk of injury and equipment damage. Avoid dropping the Encharge Battery(ies). Doing so may create a hazard, cause serious injury, and/or damage the equipment.

⚠ **WARNING!** Risk of injury and equipment damage. Protect the Encharge Battery(ies) from impact damage and improper use.

⚠ **WARNING!** Risk of injury and equipment damage. Do not hold the microinverters to lift the unit during installation.

A) Two person together must lift a single Encharge battery base unit from the packaging and place it in upright position (as shown in the following image) on a flat surface.

B) Locate the Encharge lifting points:

C) The first person lifting must use points **a** and **d** (as shown) to lift the battery.

D) The second person lifting must use points **b** and **c** (as shown) to lift the battery.

E) Together, lift the Encharge battery and bring it to the already mounted bracket.

F) Hold the Encharge battery straight so that the four bolts on the back of the Encharge battery pass through the four key hole slots on the corner of the mounting bracket.

⚠ **WARNING!** Risk of injury and equipment damage. Do not release the Encharge battery unit until you ensure that the Encharge battery unit is fully seated in the wall-mount bracket shelf.

G) Once all four battery bolts fully pass through the mounting bracket key hole slots, lower the battery down until fully seated within the wall-mount bracket and set into the bottoms of the key holes.

H) Attach the battery to the mounting bracket aligning the screw hole at the bottom of the battery with the screw hole at the bottom of the bracket. Tighten the bottom screw to 8Nm.

I) To record the installation of each Encharge battery base unit, scan the serial number label using Enphase Installer Toolkit™ and your mobile device.

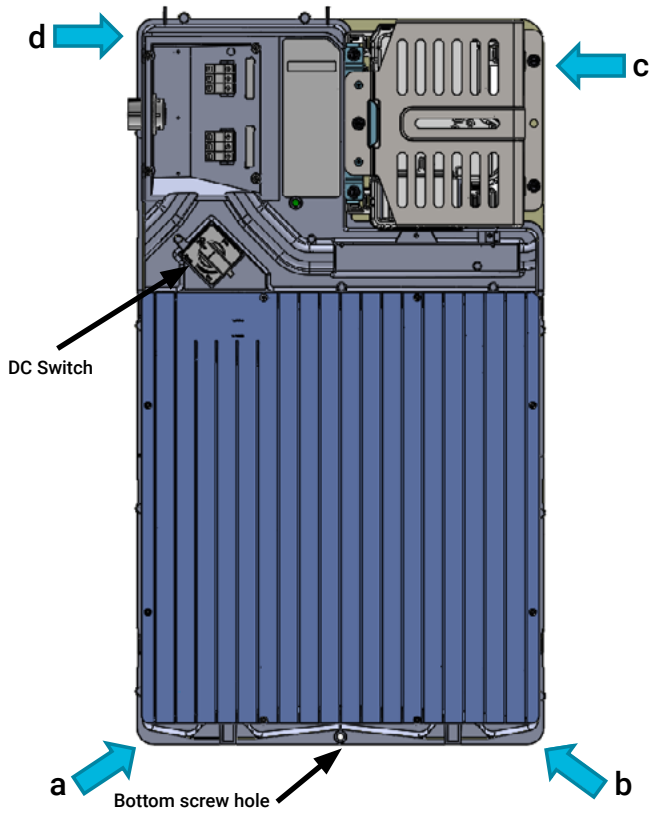

6 Prepare for field wiring

⚠ **DANGER!** Risk of electric shock. The DC switch must be in the Locked position before performing this step.

A) Drill the left wall of field wiring compartment to accommodate the conduit.

B) Connect field wiring to the top three terminal blocks.

C) Size the conductors (Line, Neutral and Ground) to account for voltage rise and to conform to the tables below. Design for a voltage rise total of less than 2%. Breaker rating and wire size are installation and local regulations dependent.

Number of Encharge 3T/10T units	Current (A)	Minimum Conductor size (mm^2)
1*E3T	5.6	2.5
2*E3T	11.1	2.5
3*E3T or 1*E10T	16.7	4
4*E3T or (1*E10T + 1*E3T)	22.2	6
5*E3T or (1*E10T + 2*E3T)	27.8	10
6*E3T or 2*E10T or (1*E10T + 3*E3T)	33.4	10

*E3T refers to Encharge 3T

*E10T referes to Encharge 10T

*If Q-relay is required in the region, then number of Encharge in daisy chain is limited by size of Q-relay.

⚠ **DANGER!** Risk of electric shock. Check that the dedicated circuit breaker protecting the branch where the Encharge Battery(ies) will be connected is turned off before wiring.

⚠ **WARNING!** Risk of equipment damage. The DC switch must be OFF before installing.

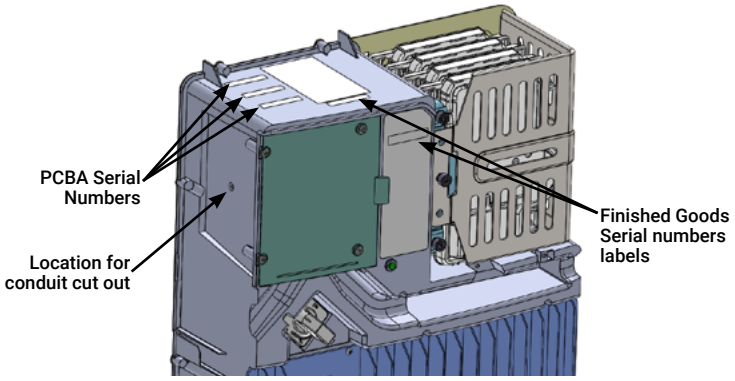

7 Install conduit and field wiring

⚠ **DANGER!** Risk of electric shock. The DC switch must be in the Locked position before performing this step.

A) **If installing an Encharge 10T**, install the interconnect cable assembly.
- Face the front of the batteries, and insert the interconnect cable assembly through the front cable slot from within the field wiring compartment, with the arm of the interconnect cable pointing up, making a "U" shape.

B) Using the conductors and suitable conduits, connect the AC disconnect and the first adjacent Encharge Battery. Use the conduit openings provided to connect the conduit and pass the wires through them.

⚠ **WARNING!** Risk of equipment damage. Do not modify or rewire the pre-installed wiring or bonding connections in the field wiring compartment.

⚠ **WARNING!** Risk of equipment damage. Always connect to two Lines (active) and one ground.

(CONTINUED ON NEXT PAGE)

7 Install conduit and field wiring (continued)

C) Connect each wire in the field wiring compartment to its corresponding conductor (Line, Neutral and Ground). Each terminal accepts two 2.5- 10 mm2 conductors (11mm strip length). Tighten to 1.6 Nm.

D) **If installing an Encharge 10T**, secure the inter-connection cable assembly between the Encharge units. You must connect the interconnect cable to the bottom three terminal blocks for the left unit and top three terminal blocks for the right unit

⚠ **WARNING!** Risk of equipment damage. Do not daisy chain more than six total Encharge 3T or two Encharge 10T on a single branch circuit.

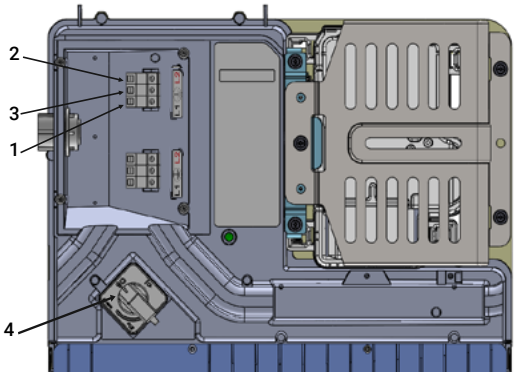

1. Terminal for L in from conduit opening
2. Terminal for N in from conduit opening
3. Terminal for ground in from conduit opening
4. DC Switch

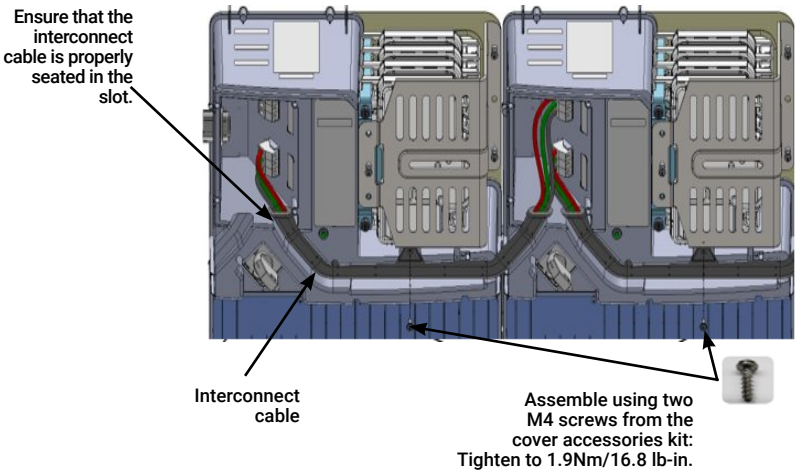

E) After all wires in the field wiring compartment are connected and secured, check that there are no exposed conductors.

F) If connecting additional Encharge Batteries, use another conduit and another set of wires to connect between field wiring compartments.

G) Gently arrange all the wires and connectors inside the field wiring compartment.

H) Secure the field wiring compartment cover. Use a cross-head screw driver to tighten the cover screws to 2.3Nm.

I) Break tab 1, tab 2, or both tabs on the field wiring door along the yellow lines indicated for interconnect cable entry as shown.

J) Do not break tabs when installing the Encharge 3T.

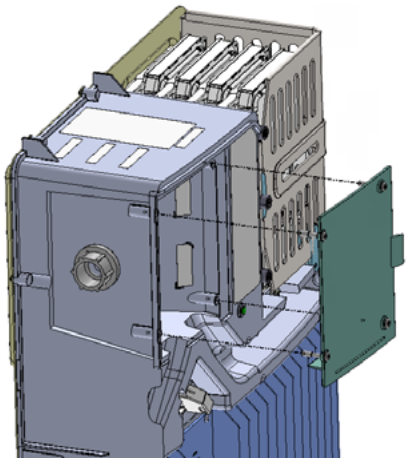

⚠ **DANGER!** Risk of electric shock. The system is not ready to be energized! Do not close the circuit breaker or turn on the DC switch.

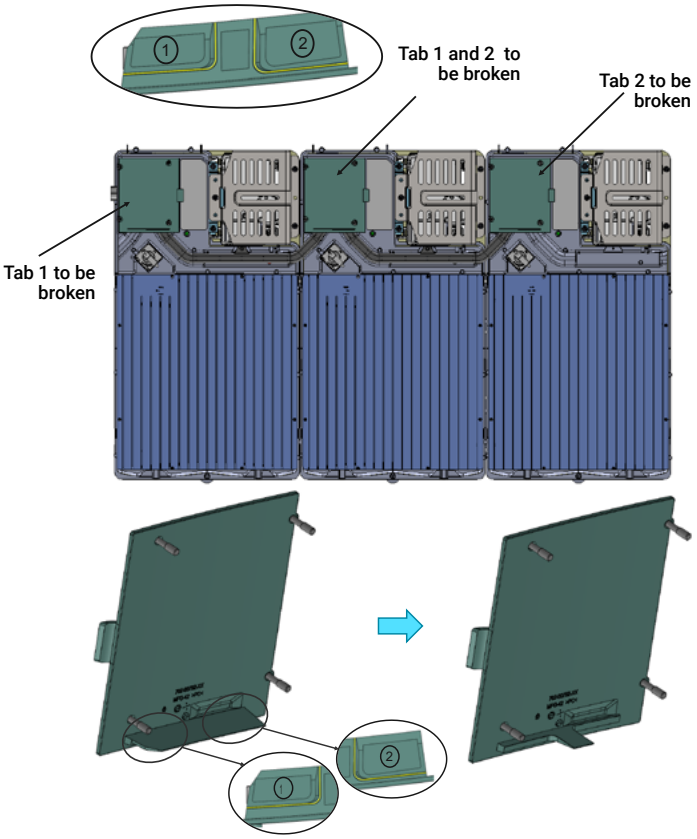

8 Cover and energize the system

⚠ **WARNING:** Before energizing, make sure that ALL Encharge Batteries in the system are properly installed and conductors terminated.

⚠ **WARNING!** Risk of equipment damage. Ensure that no wires are pinched before replacing the cover.
NOTE: Check the box for updates on cover installation instructions.
IMPORTANT: The section 8 and 9 will depict instructions for assemby and disassembly of Encharge 3T cover, simillar instructions are applicable for Encharge 10T cover.

A) Check that the field wiring compartment cover(s) for all Encharge Batteries in the system are closed and secured.

⚠ **DANGER: Risk of electric shock**. Before continuing, check that Encharge units are properly wired, and ground connection does not have a L or N connection, as this introduces a safety hazard.

- Apply AC power to the Encharge circuits. Do NOT turn on the Encharge DC switch(es).
- Using a voltmeter measure the Encharge chassis metal to ground (e.g., grounded conduit) and ensure there is no AC voltage source present. If wiring is incorrect, a ground fault may exist. If voltage is present, DO NOT touch the chassis, and immediately remove AC power from the Encharge circuits.
- Remove AC power to the Encharge circuits and correct the wiring.

⚠ **WARNING!** Risk of electric shock and equipment damage. If the DC switch is ON, AC voltage might be present at the terminals.

⚠ **DANGER: Risk of electric shock. AC voltage might be present at the output when the DC switch is on.**

⚠ **WARNING:** Branch Circuit protection for Encharge MUST be ON (with AC voltage present) before turning DC switch ON.
Wait for 15 seconds after turning branch circuit protection ON and check that LED on Encharge is ON (Any color LED is ON) before turning DC switch ON.

B) Turn On AC the power first(branch circuit protection) and then the DC switches for the Encharge Batteries.

NOTE: Do NOT leave the Encharge unit's DC switch in the ON position for any extended period of time (such as overnight or for more than 24 hours) unless Encharge is commissioned (communicating with Envoy), connected to AC, and has passed functional testing and is operational. Leaving the DC switch ON without AC connection and communication with the system will drain the battery and may cause damage to the battery cells such that they no longer be able to charge. Damage resulting from this improper installation and misuse is not covered under the product's limited warranty.

8 Cover and energize the system (continued)

C) Slide the Encharge cover in the indicated direction so that the hook of the cover in the highlighted region goes into the slot provided for it in the main unit (both sides of the main unit).

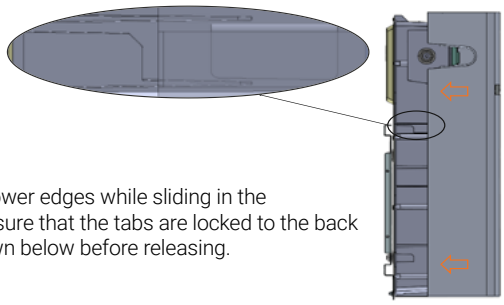

D) Pull out the lower edges while sliding in the cover and ensure that the tabs are locked to the back plate as shown below before releasing.

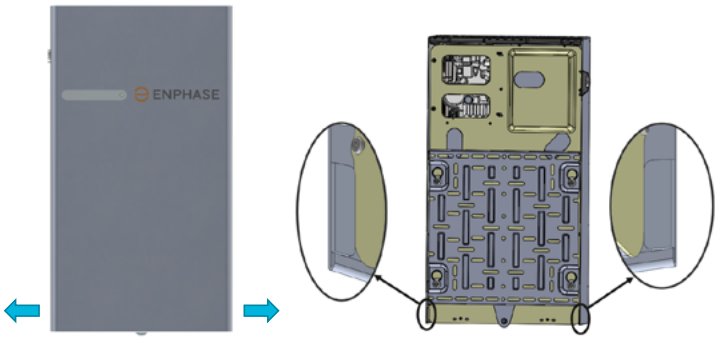

E) Once the cover reaches the position as shown in the side view image. push the top portion of the id cover and make sure that the cover is locked in place, in the indicated regions.

Before pushing into place:

Locked into place:

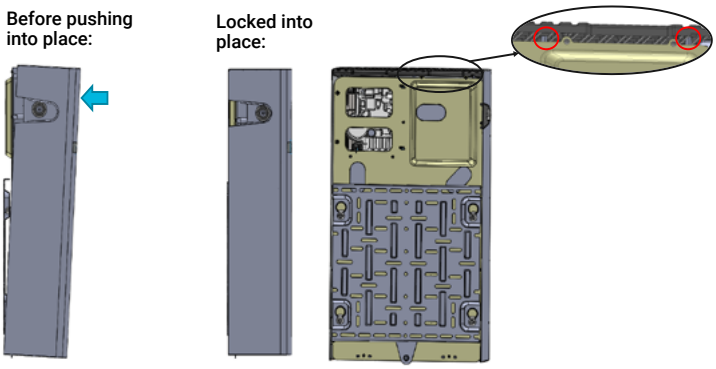

Encharge 3T Cover

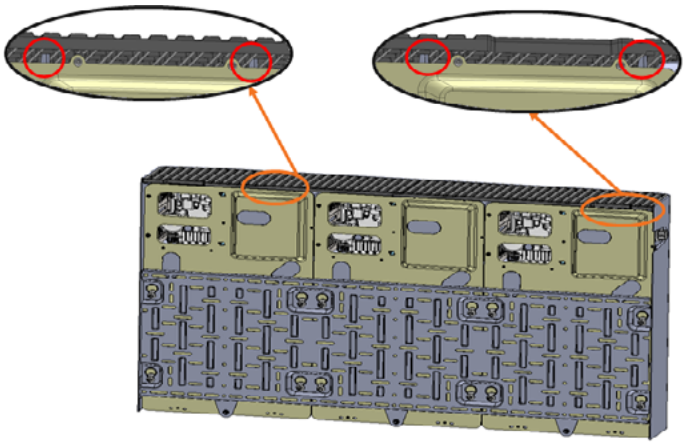

Encharge 10T Cover

NOTE: Only for reference purpose, the Enchage 10T Cover image is shown above for locking.

F) After assembling the Encharge cover, remove the break-out tab from the conduit cover and assemble with the ribs snapping in as shown:

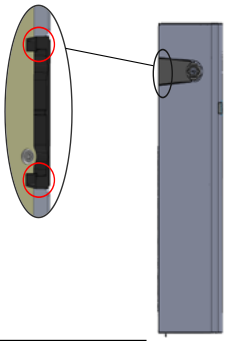

G) Break the conduit cover tab along the yellow line as indicated before assembling to the main unit:

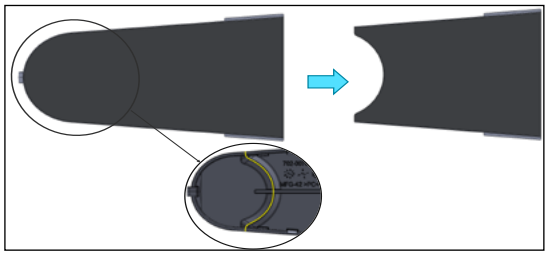

9 Disassembly of the Encharge Cover

A) Remove the conduit cover from the Encharge cover.



B) Using the hand access slots pull the top plastic grill slightly in the direction shown below (inorder to unlock the top plastic cover from the ribs highlighted in red.):

Hand Access slots

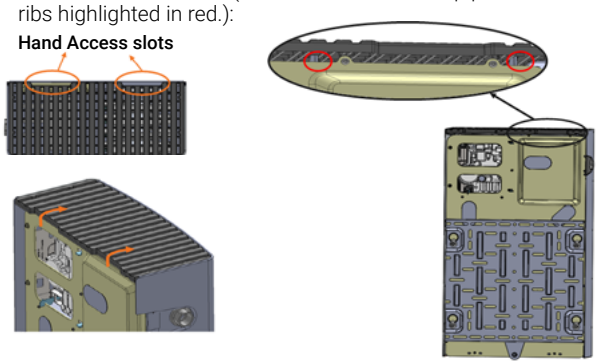

Encharge 3T Cover

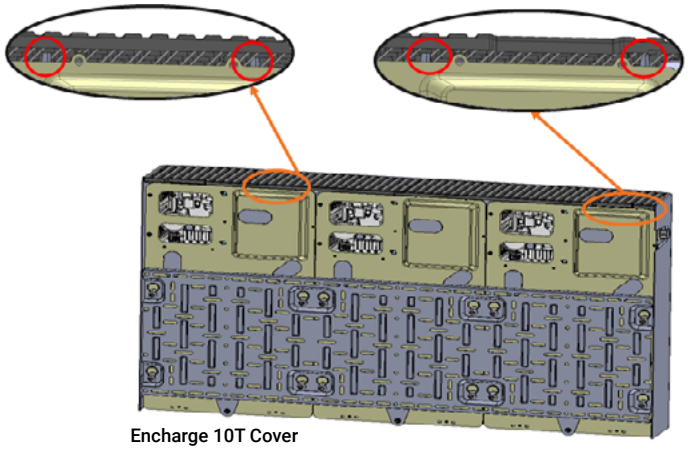

Encharge 10T Cover

NOTE: Only for reference purpose, the Encharge 10T Cover image is shown above for unlocking.

9 Disassembly of the Encharge Cover (continued)

Ensure that the Encharge cover reaches the position shown in the side view image after the completion of the step B.

Before Step B

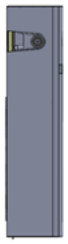

After Step B



C) Pull out the lower portion of the cover in the directions shown below and move it away from the wall slightly(in order to unlock the highlighted angular tabs):

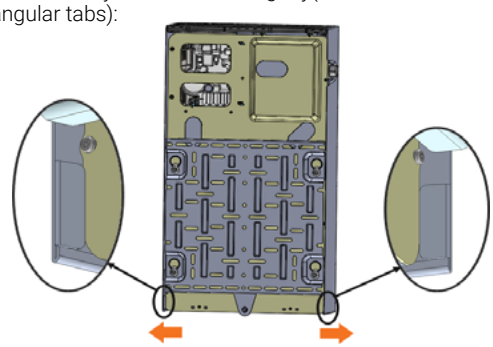

D) Pull out the cover in the indicated direction.



CONFIGURE and ACTIVATE

A) Use the Enphase Installer Toolkit to commission the Encharge Battery(ies). Once connected to the Envoy, refer to the Installer Toolkit help topics for more information.

B) After the Envoy has detected the Encharge Battery(ies), the Encharge LEDs operate as described in the following section.

OPERATION

a LED overview

After being commissioned, the LED flashes yellow while each Encharge Battery boots up. If the LED rapidly flashes green for more than two minutes, the battery is in trickle charge mode and will remain so until it reaches a minimum state of charge (up to 30 minutes). After the Encharge Battery is booted up, the LED becomes blue or green depending on the charge level. If the LED flashes yellow after one hour or changes to a flashing red state, contact Enphase Customer Support at enphase.com/en-uk/support/contact

State	Description
Uncommissioned	
Flashing blue	After booting up, Encharge has paired with an Envoy but has not passed the commissioning three-way handshake to confirm that it is an Enphase device.
Flashing green	After passing the three-way handshake with the Envoy.
After commissioning (normal operation)*	
Rapidly flashing yellow	Starting up / Establishing communications
Red flashes in sequences of 2	Error. See "Troubleshooting".
Solid yellow	Not operating due to high temperature. See "Troubleshooting".
Solid blue or green	Idle. Color transitions from blue to green as state of charge increases. Check Enlighten for charge status.
Slowly flashing blue	Discharging
Slowly flashing green	Charging
Slowly flashing yellow	Sleep mode activated
Off	Not operating. See "Troubleshooting".

* Encharge batteries have a one-hour orphan timer. If the Envoy stops communicating with them, after one hour the Encharge batteries return to an "uncommissioned" state.

b Operating mode and set points

Encharge supports multiple storage interactive system modes based on usage.

A) Using MyEnlighten or Enlighten Mobile, select **Menu** > **Settings** > **Battery Storage.**

B) Select one of two battery modes:
- Self-consumption mode (default, no setting change required)
- Savings mode

For more information on Operation modes, refer to the ***Storage System Owner's guide*** at enphase.com/en-uk.

c P-Q Diagram

Below is an active power (P) capability curve relative to reactive power (Q) within the operating voltage range for Encharge. Encharge has the capability to absorb or inject reactive power, if needed, provided that current and voltage ratings are not exceeded.

Reactive power capability = ± 52.7% (over / under excited)

Maximum power factor (pf) adjustability = -0.80 to +0.80

Encharge P-Q Capability Plot

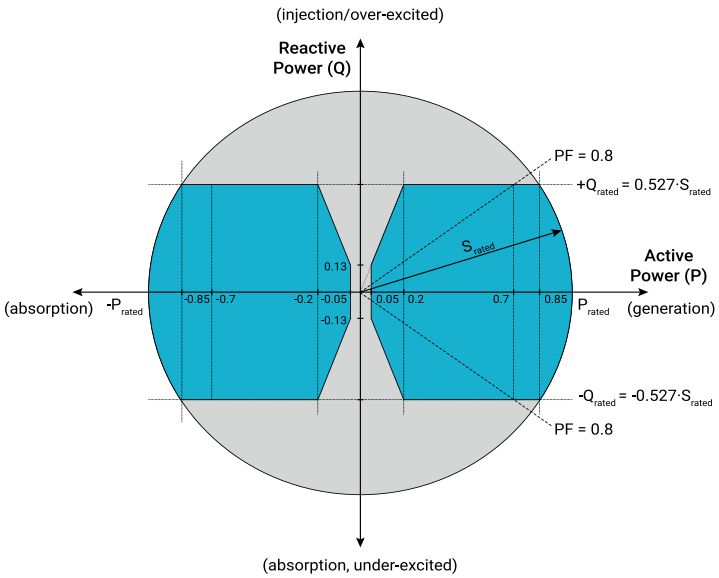

The above plot shows the maximum P-Q capability of Encharge. Depending on the utility guidelines for the country, this will have modified diagram with same or reduced P,Q values

d Anti-islanding function using:

1. Frequency Bias (Enabled by Default)
2. VAR Injection and
3. Rate of Change of Frequency (ROCOF)

e Troubleshooting

If the Encharge Battery(ies) are not operating correctly, do the following. If the issue persists, contact Enphase at enphase.com/en-uk/support/contact.

A) If the Encharge Battery(ies) do not operate, check the temperature in the room and increase cooling and/or ventilation as required. Check that the front, top, and sides of the Encharge batteries have at least 15cm (six inches) of unobstructed clearance.

B) If the Encharge LED is off, turn off the breaker for the branch circuit, wait for at least one minute, and turn it back on.

NOTE: During a brownout or blackout, the Encharge powers down automatically. This is normal. When power is restored, it automatically starts up again.

C) If you do not see Encharge information in Enlighten, check that the Envoy and the Internet connection are working. If the issue persists, contact Enphase Customer Support at enphase.com/en-uk/support/contact

SAFETY

IMPORTANT SAFETY INSTRUCTIONS. SAVE THESE INSTRUCTIONS. This guide contains important instructions that you must follow during installation and maintenance of the Enphase Encharge Battery(ies). Failing to follow any of these instructions may void the warranty (enphase.com/warranty).

In Case of Fire or Other Emergency

In all cases:

- If safe to do so, switch off the AC breaker for the Encharge Battery circuit, and if an isolator switch is present, switch off the AC isolator for the Encharge Battery circuit.
- Contact the fire department or other required emergency response team.
- Evacuate the area.

In case of fire:

- When safe, use a fire extinguisher. Suitable types are A, B, and C dry chemical fire extinguishers. Additional extinguishing media include carbon dioxide, or alcohol-resistant foams.

In case of flooding:

- Stay out of the water if any part of the Encharge Battery(ies) or wiring is submerged.
- If possible, protect the system by finding and stopping the source of the water, and pumping it away.
- If water has contacted the battery, call your installer to arrange a inspection. If you are sure that water has never contacted the battery, let the area dry completely before use.

In case of unusual noise, smell or smoke:

- Ensure nothing is in contact with the Encharge Battery(ies) or in the venting area of the Encharge Battery(ies).
- Ventilate the room.
- Contact Enphase Customer Support at enphase.com/en-uk/support/

Safety and Advisory Symbols

⚠	**DANGER**: This indicates a hazardous situation, which if not avoided, will result in death or serious injury.
⚠	**WARNING**: This indicates a situation where failure to follow instructions may be a safety hazard or cause equipment malfunction. Use extreme caution and follow instructions carefully.
✓	**NOTE**: This indicates information particularly important for optimal system operation. Follow instructions carefully.

Safety Instructions

⚠	**DANGER**: Risk of electric shock. Risk of fire. Only qualified electricians should install, troubleshoot, or replace the Encharge Battery(ies).
⚠	**DANGER**: Risk of fire or explosion. Only qualified personnel, using personal protective equipment (PPE) should transport or handle the Encharge Battery(ies).
⚠	**DANGER**: Risk of explosion. Do not dispose of Encharge Battery(ies) in a fire or by burning. The Encharge Battery(ies) can explode.
⚠	**DANGER**: Risk of fire or explosion. This product is designed for stationary installation only and should be used accordingly. It is not designed for mobile applications such as installation and on vehicles and trailers and should not be used in such applications.
⚠	**DANGER:** Risk of fire. During use, when stored, or during transport, keep the Encharge Battery(ies) in an area that is well ventilated and protected from the elements, where the ambient temperature and humidity are within -15° C to 55° C (5° F to 131° F) and 5% to 100% RH, non-condensing, preferably out of direct sunlight. Do not install the Encharge Battery(ies) at elevations over 2000 m (6,561 feet) above sea level.
⚠	**DANGER:** Risk of fire. If the Encharge Battery(ies) generate smoke, remove AC power from the Enphase System and turn the DC connect switch to the off position so that charging/discharging stops.
⚠	**DANGER:** Risk of electric shock. Risk of fire. Do not attempt to repair the Encharge Battery(ies). DO NOT OPEN THE ENCLOSURE -- NO SERVICEABLE PARTS. Tampering with or opening the Encharge Battery(ies) will void the warranty. If the Encharge Battery(ies) fail, contact Enphase Customer Support for assistance at enphase.com/en-uk/support/contact.
⚠	**DANGER**: Risk of electric shock. Do not use Enphase equipment in a manner not specified by the manufacturer. Doing so may cause death or injury to persons, or damage to equipment.
⚠	**DANGER**: Risk of electric shock. Do not install the Encharge Battery(ies) without first removing AC power from the photovoltaic system. Disconnect the power coming from the photovoltaics before servicing or installing.
⚠	**DANGER**: Risk of electric shock. Always de-energize the AC branch circuit during an emergency and/or before servicing the Encharge Battery(ies). Never disconnect the DC switch under load.
⚠	**DANGER**: Risk of electric shock. Risk of high short-circuit current. Observe the following precautions when working on batteries: • Remove watches, rings, or other metal objects. • Use tools with insulated handles. • Wear insulating gloves and boots. • Do not lay tools or metal parts on top of batteries.
⚠	**DANGER**: Risk of electric shock. Risk of fire. Do not work alone. Someone should be in the range of your voice or close enough to come to your aid when you work with or near electrical equipment.
⚠	**DANGER**: Risk of fire. Do not allow or place flammable, sparking, or explosive items near the Encharge Battery(ies).

Safety Instructions, continued

⚠	**DANGER**: Risk of electric shock. In areas where flooding is possible, install the Encharge Battery(ies) at a height that prevents water ingress.
⚠	**DANGER**: Risk of electric shock. AC voltage is present at the output when the DC switch is on.
⚠	**DANGER**: Risk of electric shock. Branch circuit protection must be off before switching DC power on or off.
⚠	**DANGER**: Risk of electric shock. The DC switch must locked in the OFF position for shipping and service.
⚠	**WARNING**: Risks of electric shock, energy hazard, and chemical hazard. Do not disassemble.
⚠	**WARNING**: Risk of equipment damage. During use, storage, transport, or installation, always keep the Encharge Battery(ies) in an upright position.
⚠	**WARNING**: You must install the Encharge Battery(ies) only on a suitable wall using an Enphase wall-mount bracket.
⚠	**WARNING**: Before installing or using the Encharge Battery(ies), read all instructions and cautionary markings in this guide and on the equipment.
⚠	**WARNING**: Do not install or use the Encharge Battery(ies) if it has been damaged in any way.
⚠	**WARNING**: Do not exceed the maximum number (3) of Encharge Batteries in a 20 A AC branch circuit.
⚠	**WARNING**: Do not sit on, step on, place objects on, or insert objects into the Encharge Battery(ies).
⚠	**WARNING**: Do not place beverages or liquid containers on top of the Encharge Battery(ies). Do not expose the Encharge Battery(ies) to liquids or flooding.
⚠	**WARNING**: When placing the Encharge Battery(ies) in storage, ensure that AC power is not present and that the DC switch is in the Locked position. While in storage, damage to the battery can occur from over-discharge. If the battery state of charge falls to 0%, the Encharge Battery(ies) can be damaged or destroyed. Because of this, the Encharge Battery(ies) must only be stored for a limited amount of time. • The Encharge Battery(ies) must be installed and energized by the "Must Energize By" date on the shipping box label. • The Encharge Battery(ies) must have a charge state of no more than 30% when placed in storage. To do this, the Encharge Battery(ies) must be placed in **Sleep Mode**. • If the Encharge Battery(ies) is already been installed, it must be placed into **Sleep Mode** prior to uninstalling. A battery in **Sleep Mode** can be stored a maximum of two months after being placed into **Sleep Mode**.
✓	**NOTE**: Perform installation and wiring, including protection against lightning and resulting voltage surge, in accordance with all applicable local electrical codes and standards.
✓	**NOTE**: Using unapproved attachments or accessories could result in damage or injury.
✓	**NOTE**: Install properly rated over current protection as part of the system installation.
✓	**NOTE**: To ensure optimal reliability and to meet warranty requirements, the Encharge Battery(ies) must be installed and/or stored according to the instructions in this guide.
✓	**NOTE**: The Encharge Battery(ies) are compatible only with the **Envoy communications gateway properly fitted with USB hub, USB radios, and production and consumption CTs.** The **Envoy** is required for operation of the Encharge Battery(ies). Earlier versions of the Enphase Envoy communications gateway are incompatible.
✓	**NOTE**: The Enphase Encharge Battery(ies) are intended to operate with an Internet connection. Failure to maintain an Internet connection may have an impact on the warranty. See Limited Warranty for full terms and services (enphase.com/warranty).
✓	**NOTE**: When replacing Enphase Encharge Battery(ies), you must replace with an Encharge Battery(ies) of the same type, with the same AC current rating.
✓	**NOTE**: When disconnected and stored, no automatic charge of the battery is possible.
✓	**NOTE**: Properly mount the Encharge Battery(ies). Ensure that the mounting location is structurally suited to bearing the weight of the Encharge Battery(ies).
✓	**NOTE**: During use, storage, and transport, keep the Encharge Battery(ies): • Properly ventilated • Away from water, other liquids, heat, sparks, and direct sunlight • Away from excessive dust, corrosive and explosive gases like ammonia, and oil smoke • Away from direct exposure to gas exhaust, such as from motor vehicles • Free of vibrations • Away from falling or moving objects, including motor vehicles. If mounted in the path of a motor vehicle, we recommend a 91 cm (36-inch) minimum mounting height • At an elevation of lower than 2,000m (6,561 feet) above sea-level • In a location compliant with fire safety regulations • In a location compliant with local building codes and standards
✓	**NOTE**: Conditions for the Encharge installation site apply also to storage conditions.



Environmental Protection

ELECTRONIC DEVICE: DO NOT THROW AWAY. Waste electrical products should not be disposed of with household waste. Proper disposal of batteries is required. Refer to your local codes for disposal requirements.