ROOFSUPPORT
BY CONDUCT

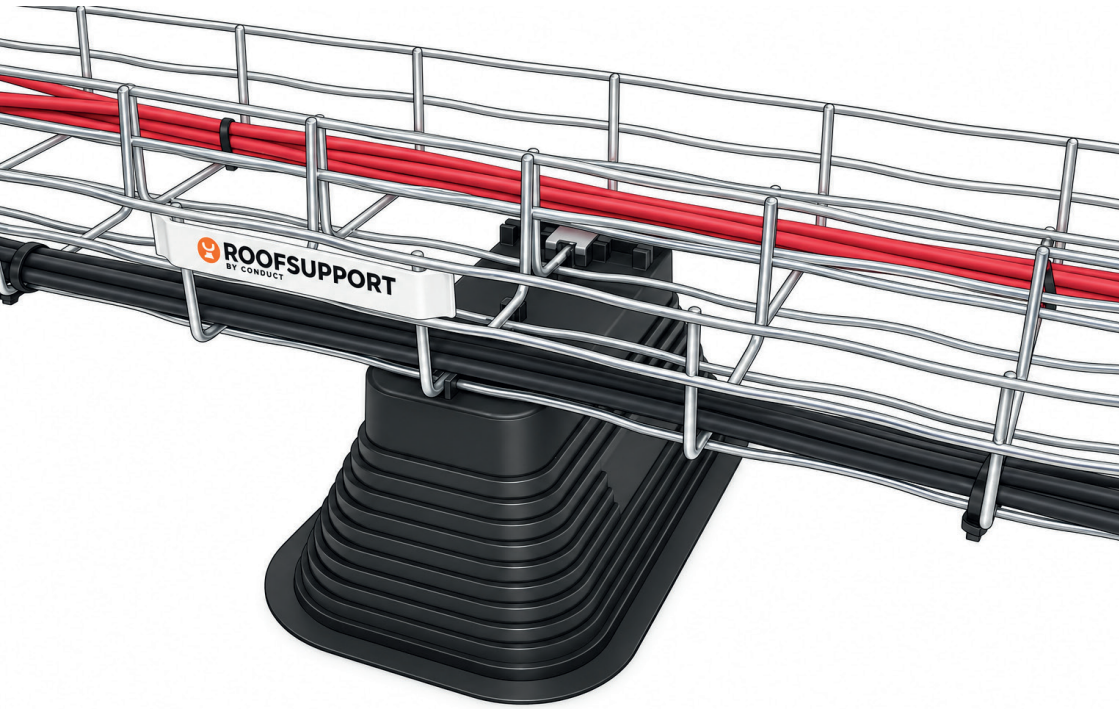

QUICK START GUIDE ROOFSUPPORT

1



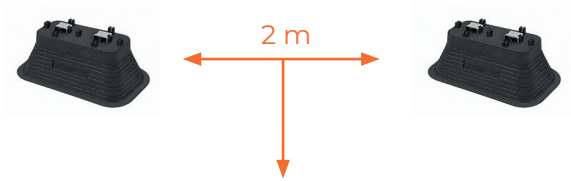

SUPPORT SPACING REQUIREMENTS

Wire mesh cable tray	Max. weight per metre	Max. number of 6 mm² cables
65x200 mm	22 kg/m	275 cables
65x300 mm	25 kg/m	312 cables
65x400 mm	35 kg/m	437 cables
65x600 mm	45 kg/m	562 cables

Source: Safe Working Load Basor (BASORFIL BF2R, EN IEC 61537)

Weight of 6 mm² solar cable: 0.08 kg/m. Average value, may vary depending on the cable brand. When the RoofSupport filling requirements are followed, these maximum cable quantities will not be reached.

Always maintain a maximum spacing of 2.0 metres between the roof supports. This is also the maximum support spacing specified in the wind certification.

Different situation? Scan for Safe Working Load information:

2A

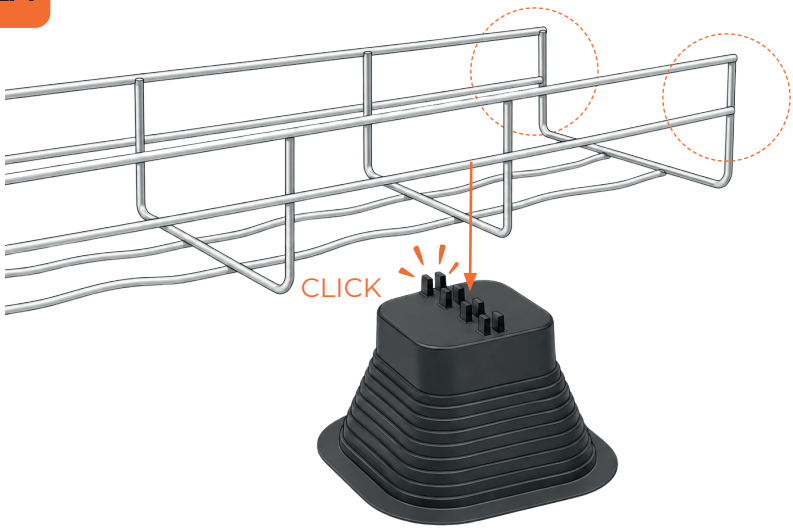

2B

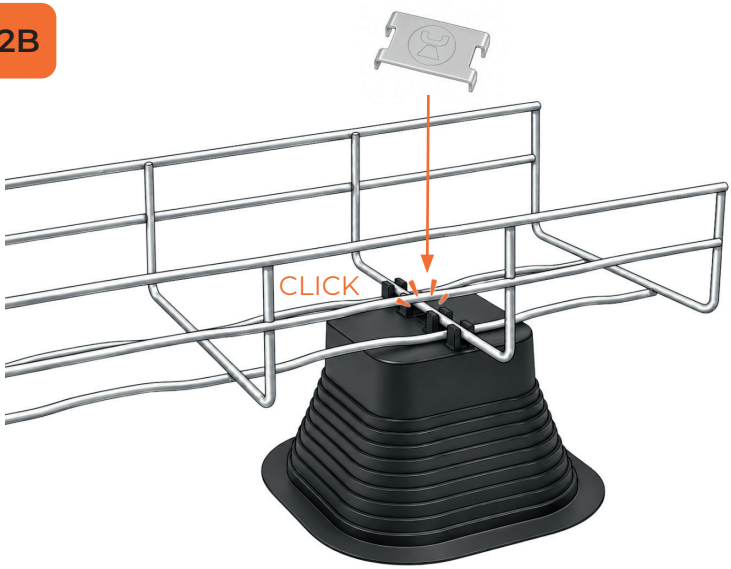

3A

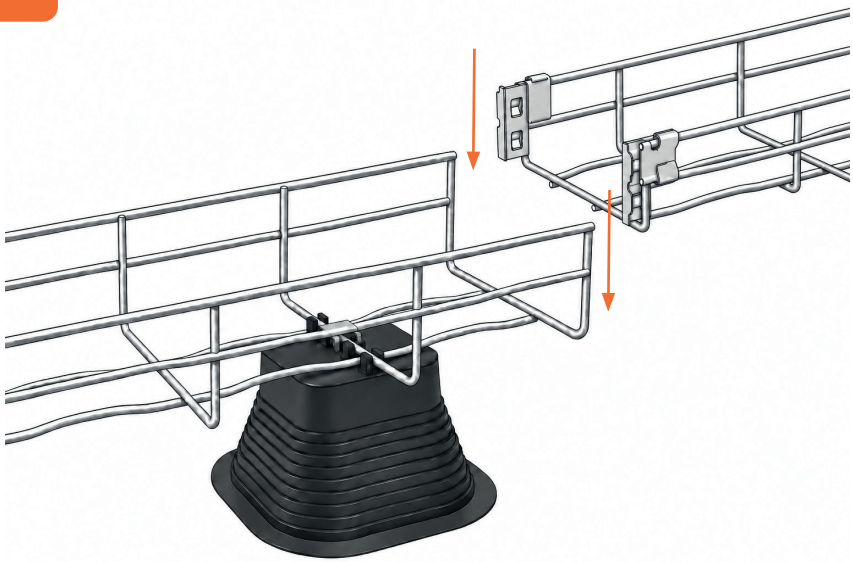

3B

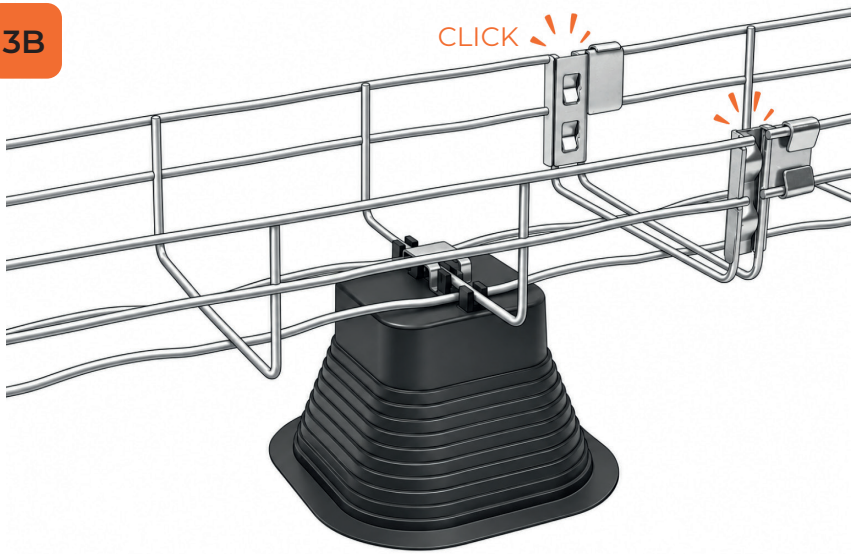

4 OPTIONAL

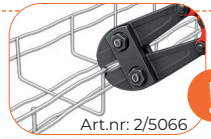
Art.nr: 2/5066

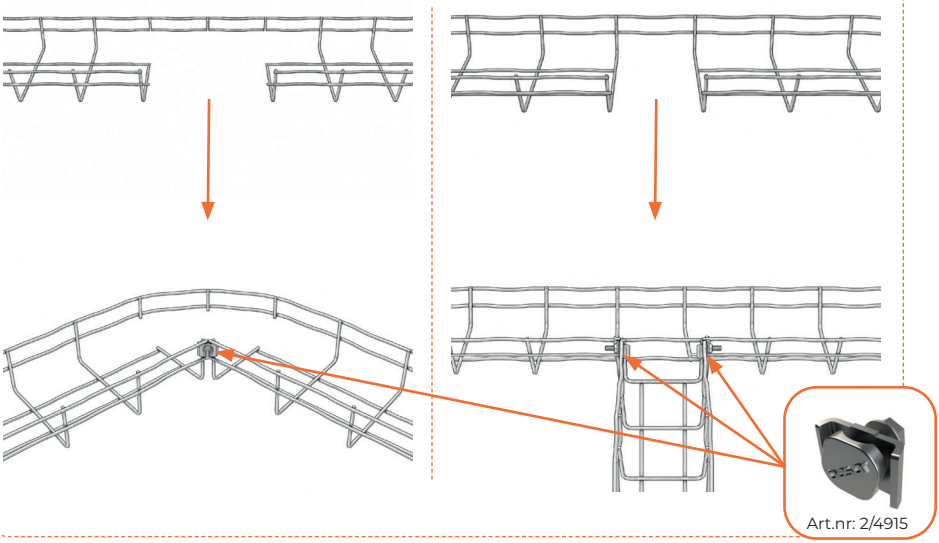
Art.nr: 2/4915

5

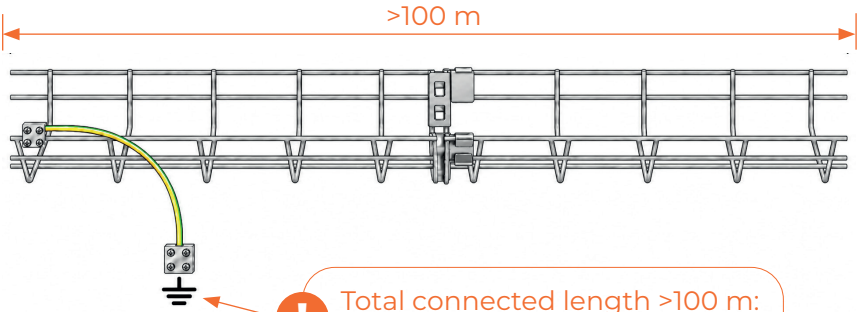
>100 m
Total connected length >100 m:
Earthing required!

6A OPTIONAL

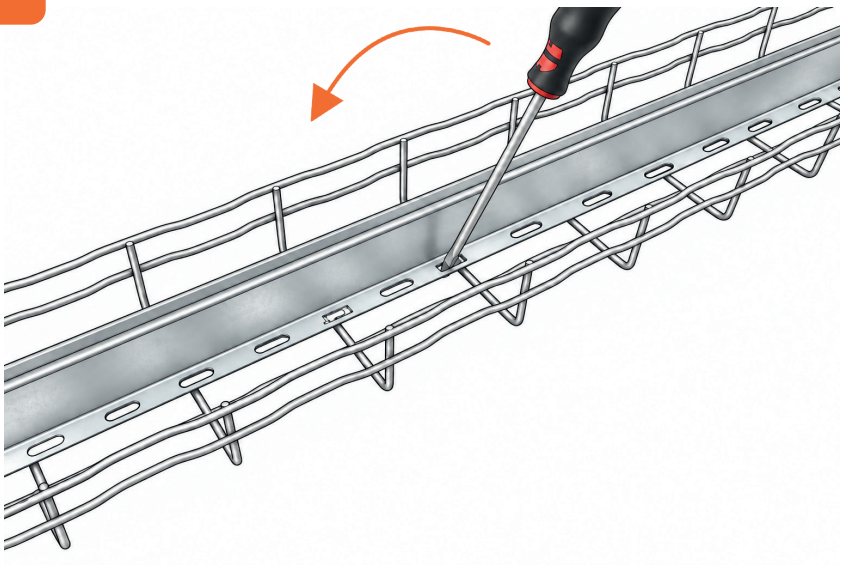

6B

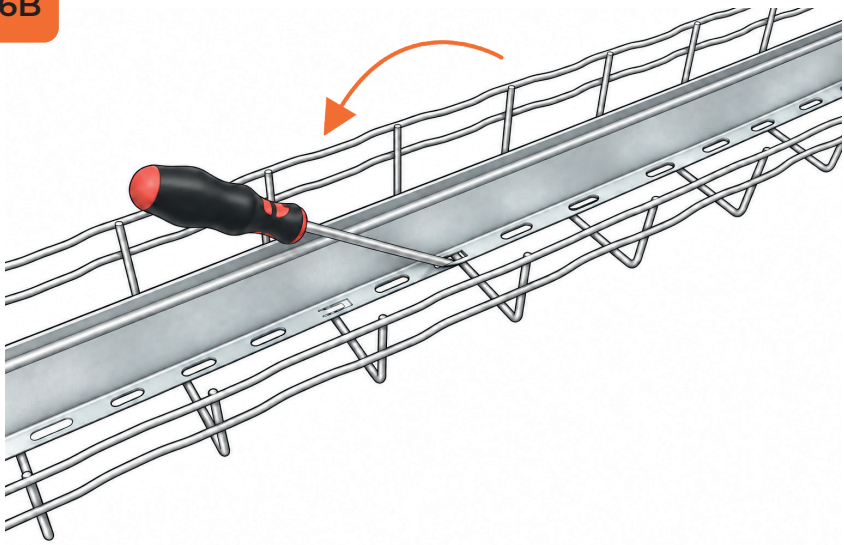

6C

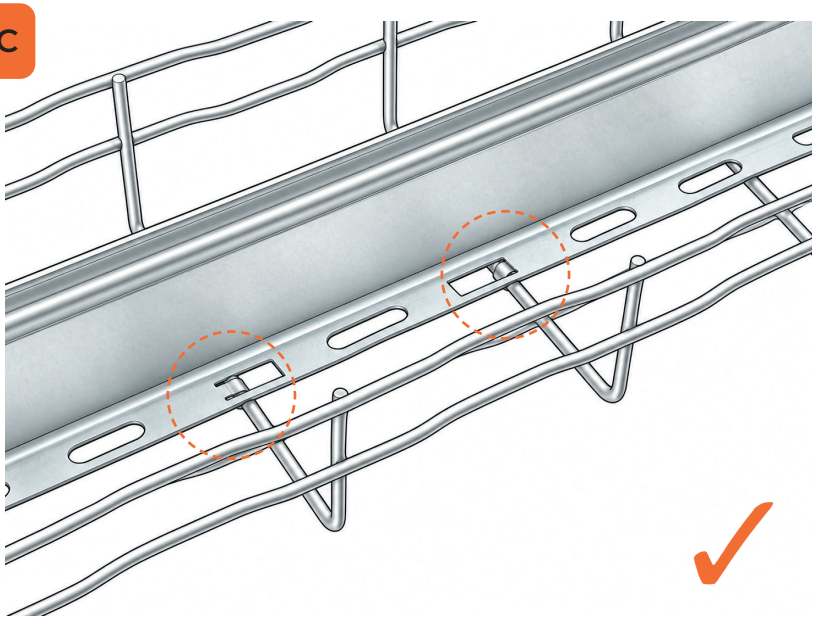

7

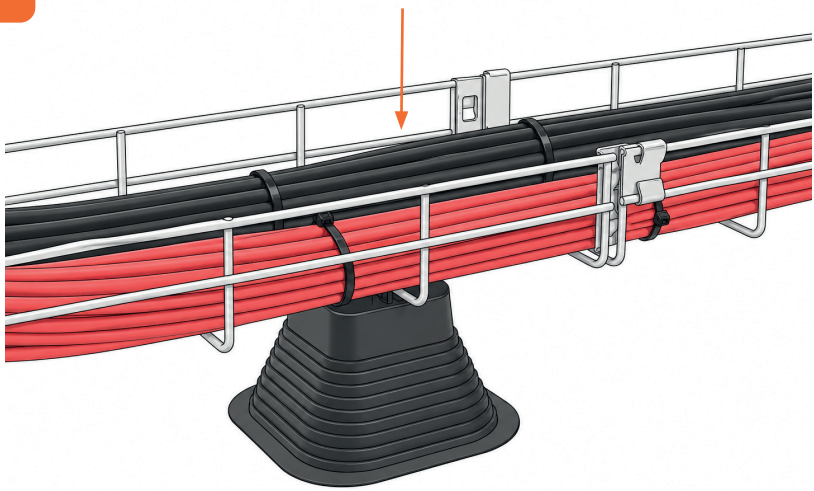

8A OPTIONAL

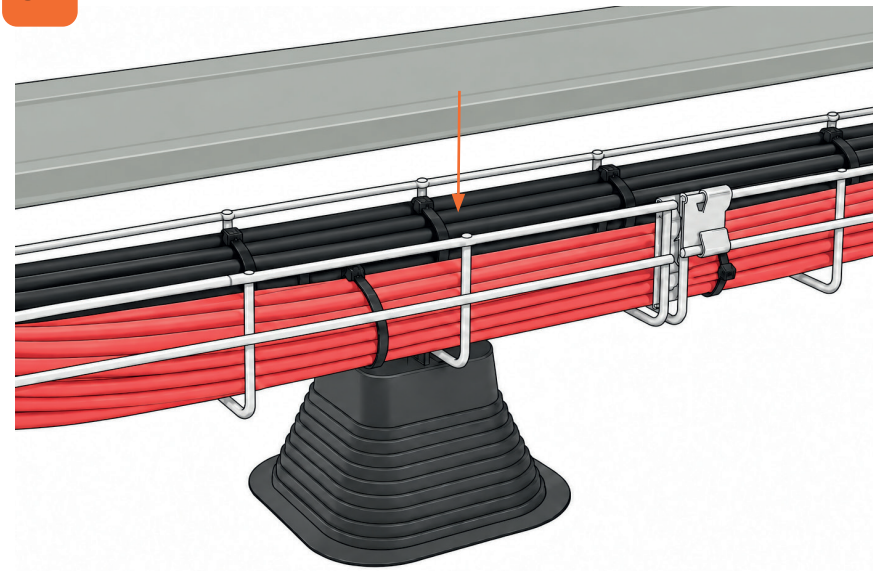

8B OPTIONAL

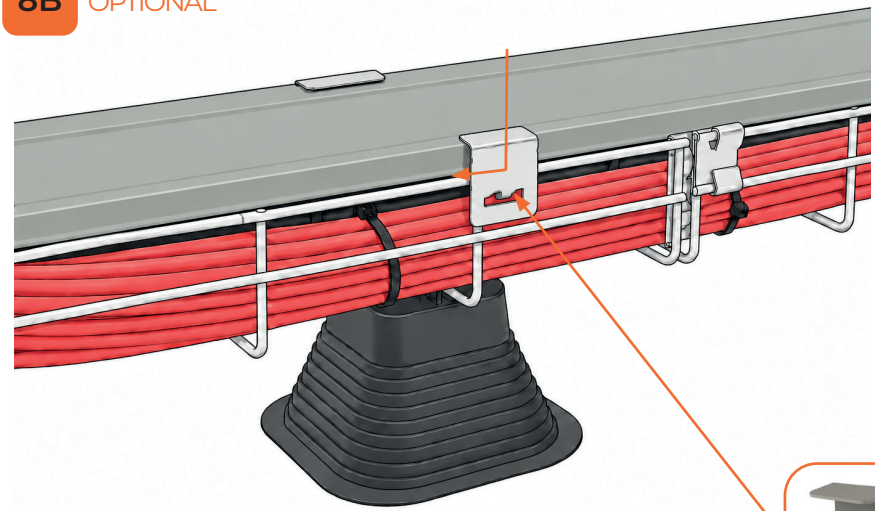



4 clips per cover

Art.nr: 2/10254