/ STPHxx-60-ISP-xx-10 | Version 1.0

# SUNNY TRIPOWER HYBRID X 5 / 6 / 8 / 10 / 12 / 15

STPH5-60 / STPH6-60 / STPH8-60 / STPH10-60 / STPH12-60 / STPH15-60

eManual

## 1

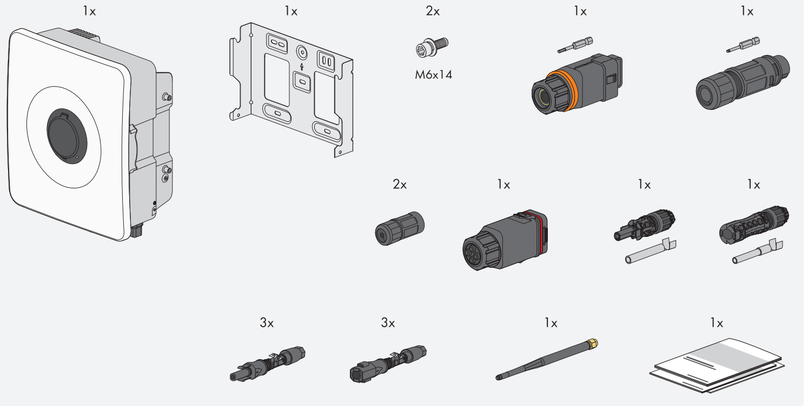


## 2

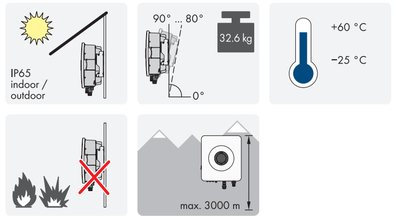


## 3

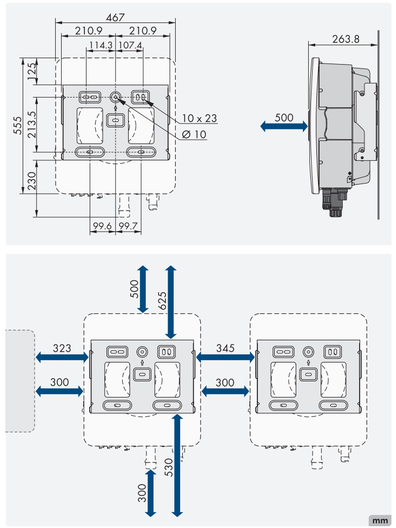


## 3

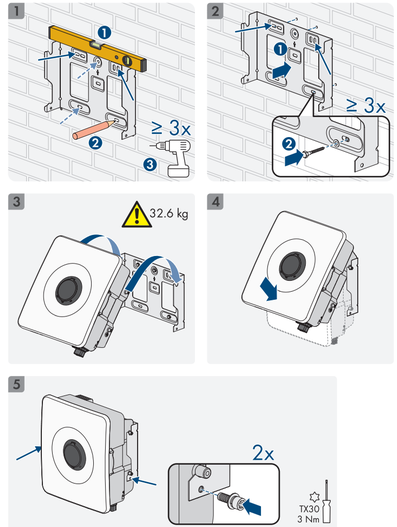


## 4 AC

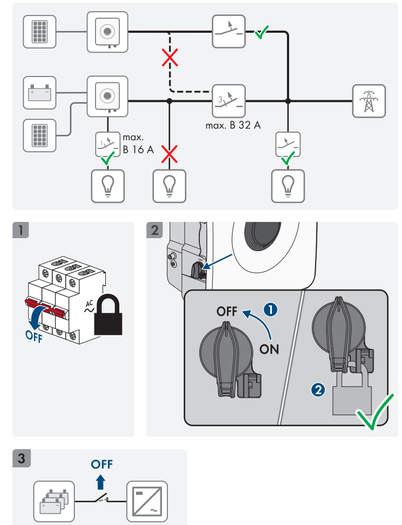


## 4 AC

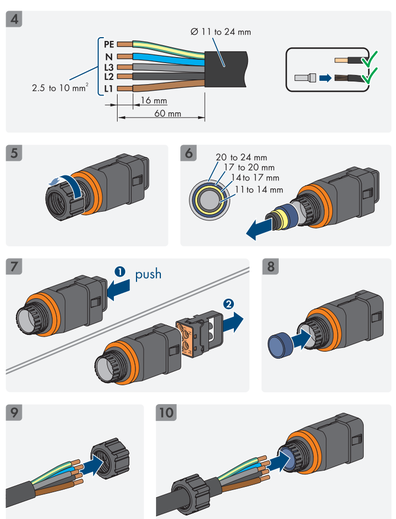


## 4 AC

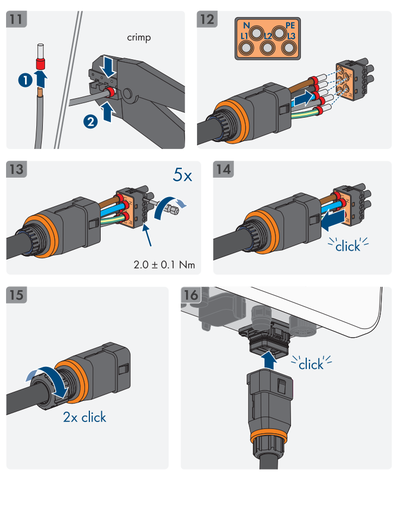


## 5

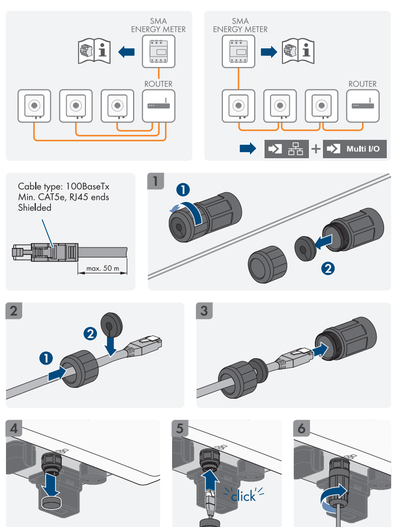


## 6 SMA HOME STORAGE

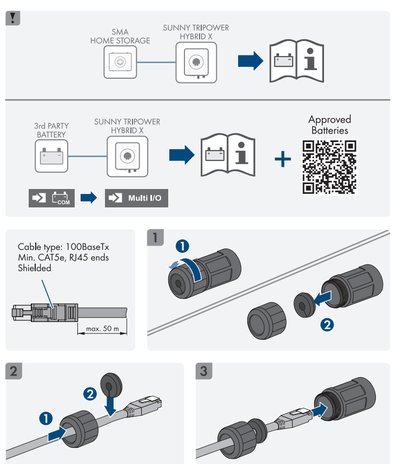


## 7 Multi I/O

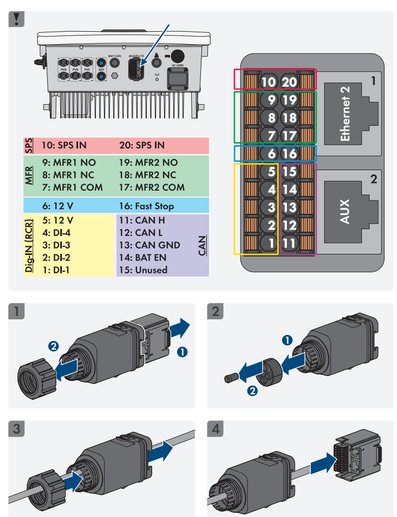


## 7 Multi I/O

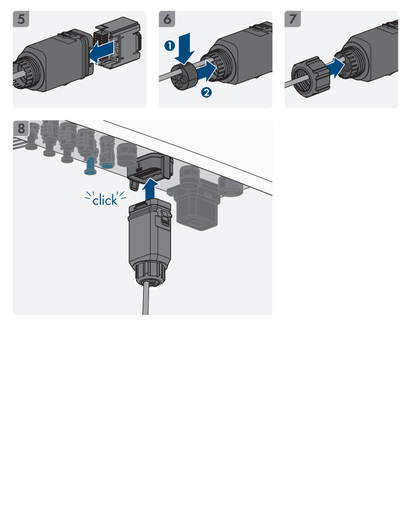

## 8 DC

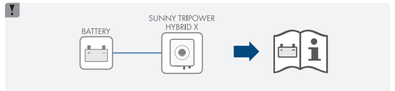


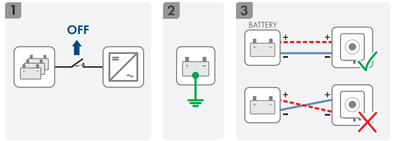


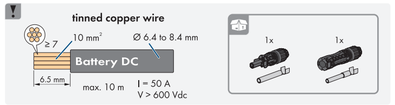


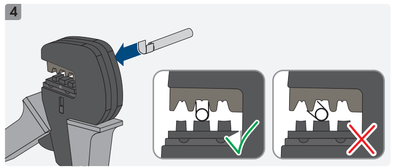


## 8 DC

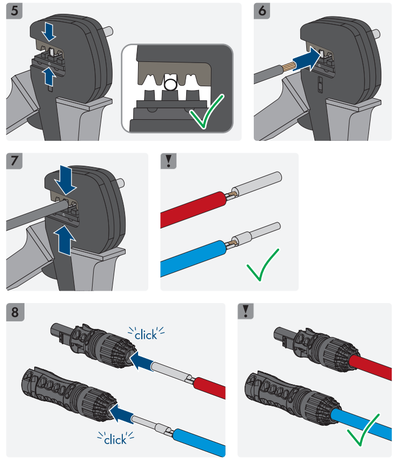


## 8 DC

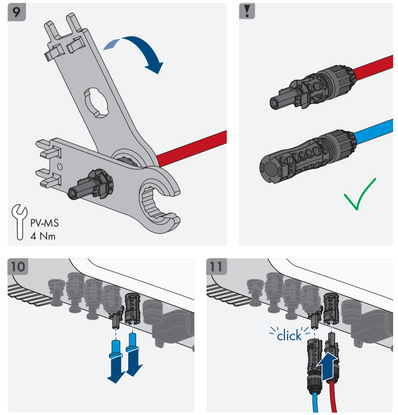


## 9 DC

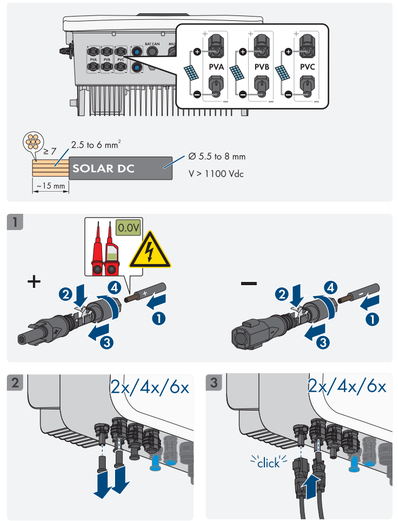


## 10

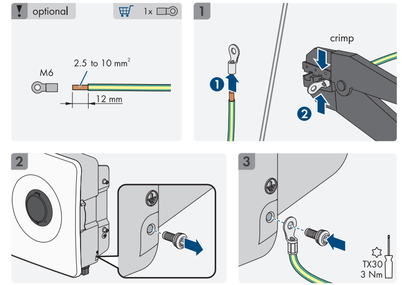


## 11 AC + 

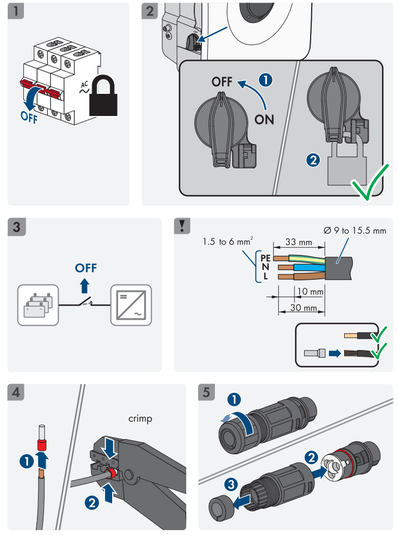


## 11 AC + 

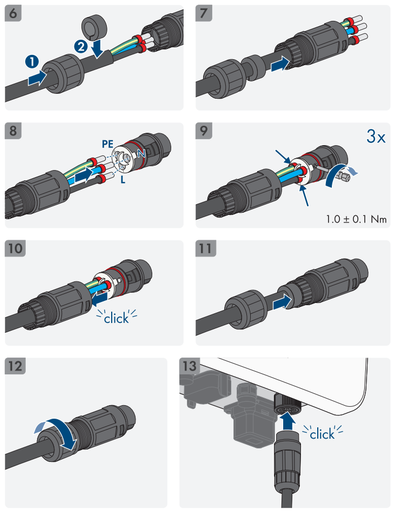


## 12 ON

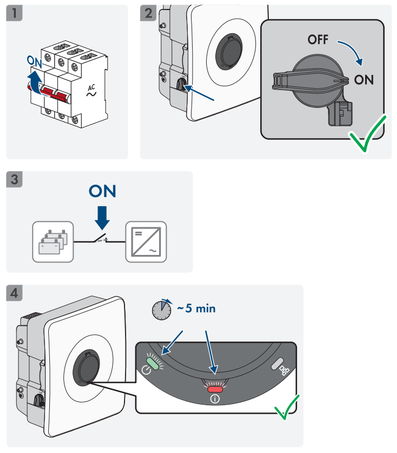


## 13 SMA 360° APP

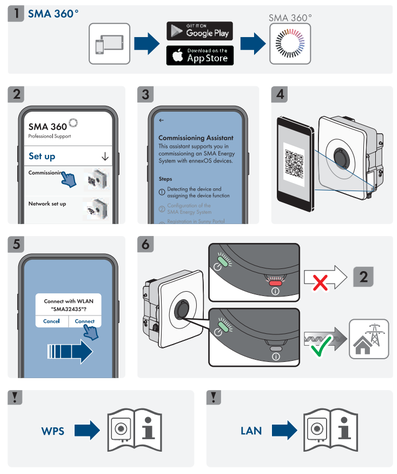


## 14 System data

**System Data**

| | |
|---|---|
| Topology | no galvanic isolation |
| Overvoltage category in accordance with IEC 60664-1 | II (DC), III (AC) |
| Protection class in accordance with IEC 61140 | I |
| All-pole sensitive residual-current monitoring unit | integrated |
| Maximum permissible value for relative humidity, condensing | 100 % |
| Extended humidity range according to IEC 60721-3-4 | 0 % to 100 % |
| Pollution degree inside the enclosure | 2 |
| Pollution degree outside the enclosure | 3 |

**AC**

| | STPH5-60 | STPH6-60 | STPH8-60 |
|---|---|---|---|
| $P_{AC\ (@230\ V)}$ | 5 kW | 6 kW | 8 kW |
| $S_{(@\cos\varphi\ =\ 1,\ 230\ V)}$ | 5 kVA | 6 kVA | 8 kVA |
| $V_{AC,\ r}$ | 220 V / 230 V / 240 V | | |
| $V_{AC,\ range}$ | 184 V to 264 V | | |
| $I_{AC,\ max}$ | 7,6 A | 9,1 A | 12,1 A |
| $I_{AC,\ max}$ (Backup) | 16 A | | |

## 14 System data

| | STPH5-60 | STPH6-60 | STPH8-60 |
|---|---|---|---|
| $f_{AC}$ | 50 Hz | | |
| cos φ | 0.8 overexcited to 0.8 underexcited | | |

| | STPH10-60 | STPH12-60 | STPH15-60 |
|---|---|---|---|
| $P_{AC\ (@230\ V)}$ | 10 kW | 12 kW | 15 kW |
| $S_{(@\cos\varphi\ =\ 1,\ 230\ V)}$ | 10 kVA | 12 kVA | 15 kVA |
| $V_{AC,\ r}$ | 220 V / 230 V / 240 V | | |
| $V_{AC,\ range}$ | 184 V to 264 V | | |
| $I_{AC,\ max}$ | 15,2 A | 18,2 A | 22,7 A |
| $I_{AC,\ max}$ (Backup) | 16 A | 22,7 A | 22,7 A |
| $f_{AC}$ | 50 Hz | | |
| cos φ | 0.8 overexcited to 0.8 underexcited | | |

**DC**

| | STPH5-60 | STPH6-60 | STPH8-60 |
|---|---|---|---|
| Max. generator power | 7500 Wp | 9000 Wp | 12000 Wp |
| $V_{DC,\ max}$ | 1000 V | | |
| $V_{DC,\ MPP}$ | 90 V to 850 V | | |
| $V_{DC,\ Initial\ input}$ | 100 V | | |
| $I_{DC,\ max\ usable\ input\ A\ /\ B}$ | 18 A | | |
| $I_{SC\ PV\ max,\ all\ inputs}$ | 24 A | | |

## 14 System data

| | STPH10-60 | STPH12-60 | STPH15-60 |
|---|---|---|---|
| Max. generator power | 15000 Wp | 18000 Wp | 22500 Wp |
| $V_{DC,\ max}$ | 1000 V | | |
| $V_{DC,\ MPP}$ | 90 V to 850 V | | |
| $V_{DC,\ Initial\ input}$ | 100 V | | |
| $I_{DC,\ max\ usable\ input\ A\ /\ B}$ | 18 A | | |
| $I_{SC\ PV\ max,\ all\ inputs}$ | 24 A | | |

**Battery**

| Type | Li-ion battery |
|---|---|
| $V_{DC,\ max}$ | 600 V |
| $V_{DC,\ min}$ | 80 V |
| $I_{DC,\ max}$ | 50 A |