Important instructions for planning and installation with BRC Optimizer M700-E

To correctly install the Power Optimizer M700-E and to avoid problems from the very beginning, please note the following introductions:

1. If an **inverter with a MPP input current (IMPP) of more than 18,5 A** is used, it is not allowed to install the Power Optimizer M700-E at every pv module. In this case it is only allowed to equip a maximum of 50% of all pv modules of each string with a Power Optimizer M700-E. You can check if this is necessary with our inverter checker: *https://brc-solar.de/en/power-optimizer-en/inverter-checker/*

2. **Do not use M700-E optimisers with parallel strings. Optimisers are only possible if only one string is connected to an MPP tracker.** Only then can this string be equipped with M700-E optimisers. If you have any questions about redesign in such cases, please contact the support department at BRC Solar. (Tel.: +49 7243 924 1486 / Email: support@brc-solar.de)

3. Always **connect the Power Optimizer M700-E according to the following sequence:** First connect the short cables to the pv module, then connect the long cables to the string.

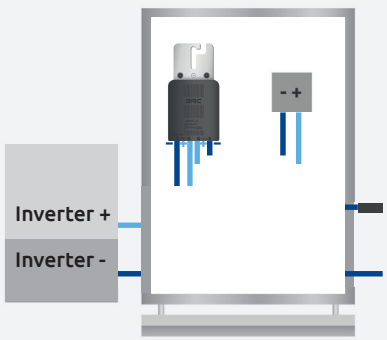

1 If the module is already connected on the string side, disconnect the connections from the neighbouring modules.

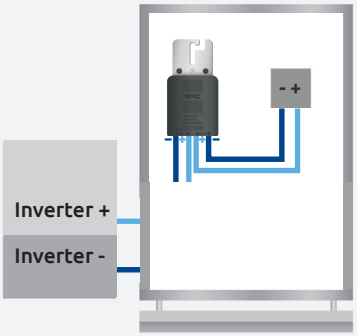

2 First, connect the short cables to the PV module.
Pay attention to the polarity.

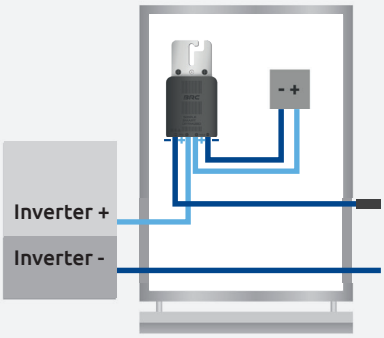

3 The long cables are connected on the string side.
Pay attention to the polarity.

Note:
- **PV testing equipment** cannot measure the current in a string where every module is equipped with an optimizer. This is only possible by using a current clamp during operation.
- If a short circuit test is performed in a plant with M700-E optimizers, the test will not provide usable results.