Important instructions for planning and installation with BRC Optimizer M605-M

To correctly install the Power Optimizer M605-M and to avoid problems from the very beginning, please note the following introductions:

1. **Do not use M605-M optimisers with parallel strings.** Optimisers are only possible if only one string is connected to an MPP tracker. Only then can this string be equipped with M605-M optimisers. If you have any questions about redesign in such cases, please contact the support department at BRC Solar. (Tel.: +49 7243 924 1486 / Email: support@brc-solar.de)

2. Always **connect the Power Optimizer M605-M according to the following sequence:** First connect the short cables to the pv module, then connect the long cables to the string.

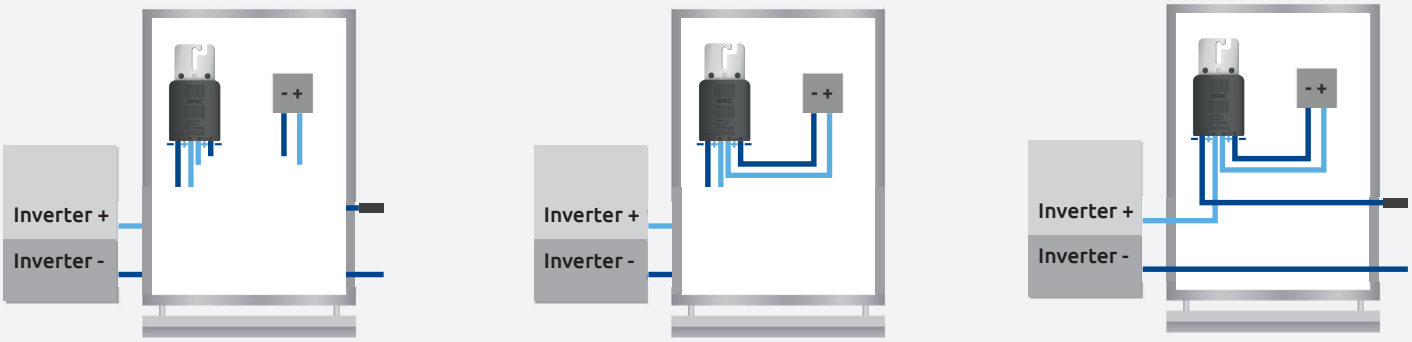

1. If the module is already connected on the string side, disconnect the connections from the neighbouring modules.
2. First, connect the short cables to the PV module. Pay attention to the polarity.
3. The long cables are connected on the string side. Pay attention to the polarity.

Note:
- **PV testing equipment** cannot measure the current in a string where every module is equipped with an optimizer. This is only possible by using a current clamp during operation.
- If a short circuit test is performed in a plant with M605-M optimizers, the test will not provide usable results.