Important instructions for planning and installation with BRC Optimizer M600-E

To correctly install the Power Optimizer M600-E and to avoid problems from the very beginning, please note the following introductions:

1. If an **inverter with a MPP input current (IMPP) of more than 16A** is used, it is not allowed to install the Power Optimizer M600-E at every pv module. In this case it is only allowed to equip a maximum of 50% of all pv modules of each string with a Power Optimizer M600-E. You can check if this is necessary with our inverter checker: *https://brc-solar.de/en/power-optimizer-en/inverter-checker/*

2. **Do not use the Power Optimizer M600-E if strings or pv modules are connected in parallel!** To avoid this situation, please connect all shaded pv modules to a separate string without a parallel connection. This string can then equipped with the Power Optimizer M600-E. In case of any further questions regarding those cases, please contact the support of BRC: (*Tel.: +49 7243 924 1486 / E-Mail: support@brc-solar.de*).

3. Always **connect the Power Optimizer M600-E according to the following sequence:** First connect the short cables to the pv module, then connect the long cables to the string.

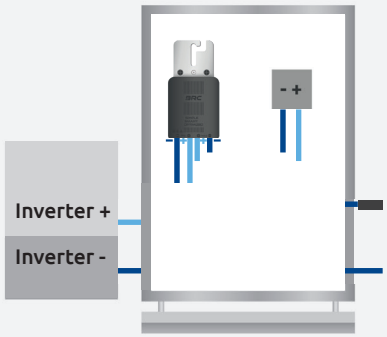

1 If the module is already connected on the string side, disconnect the connections from the neighbouring modules.

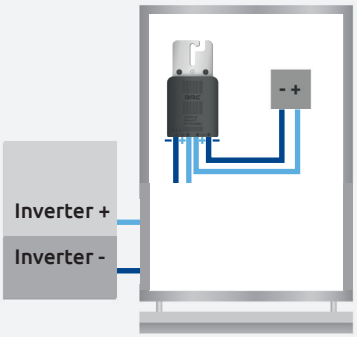

2 First, connect the short cables to the PV module.
Pay attention to the polarity.

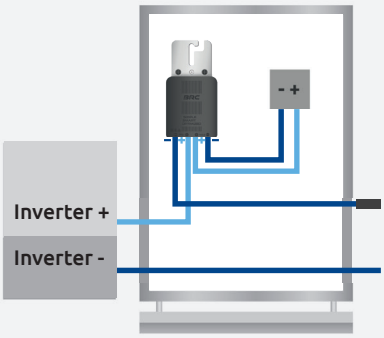

3 The long cables are connected on the string side.
Pay attention to the polarity.

Note:
- **PV testing equipment** cannot measure the current in a string where every module is equipped with an optimizer. This is only possible by using a current clamp during operation.
- If a short circuit test is performed in a plant with M600-E optimizers, the test will not provide usable results.