Sigenergy C&I Products and Solutions Overview

2025/02/07

SIGENERGY

Overview of C&I Product Family

Sigen PV Inverter

Sigen PV 50/60/80/100/110/125M1



Available*
125 kW ready in August

Sigen Hybrid Inverter

Sigen PV 50/60/80/100/110/125M1-HYA



Available*
125 kW ready in August

SigenStack

SigenStack BC
Battery Controller



SigenStack BAT
SigenStack BAT 12.0





Available

SigenStor



SigenStor EC
Energy Controller

SigenStor BAT
SigenStor BAT 5.0 / 8.0

Available

Sigen Energy Gateway

C60-2
C120-6
C180-9
C300-12
C600
C1200

Available

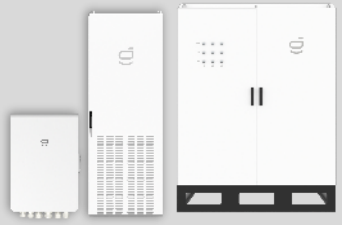

Sigen Data Logger



Sigen Logger A1-01

Ready in April 2025

Sigen Comm. Module



Sigen CommBridge

Ready in April 2025

Sigen Comm. Module



Sigen CommMod

Sigen Power Sensor





Sigen Sensor TP-CT120-DH
Sigen Sensor TP-CT300-DH
Sigen Sensor TP-CT600-DH
Sigen Sensor TPX-CH



Sigen Cloud
MySigen App

Sigen PV Inverter, **Only for PV**

Sigen PV Inverter

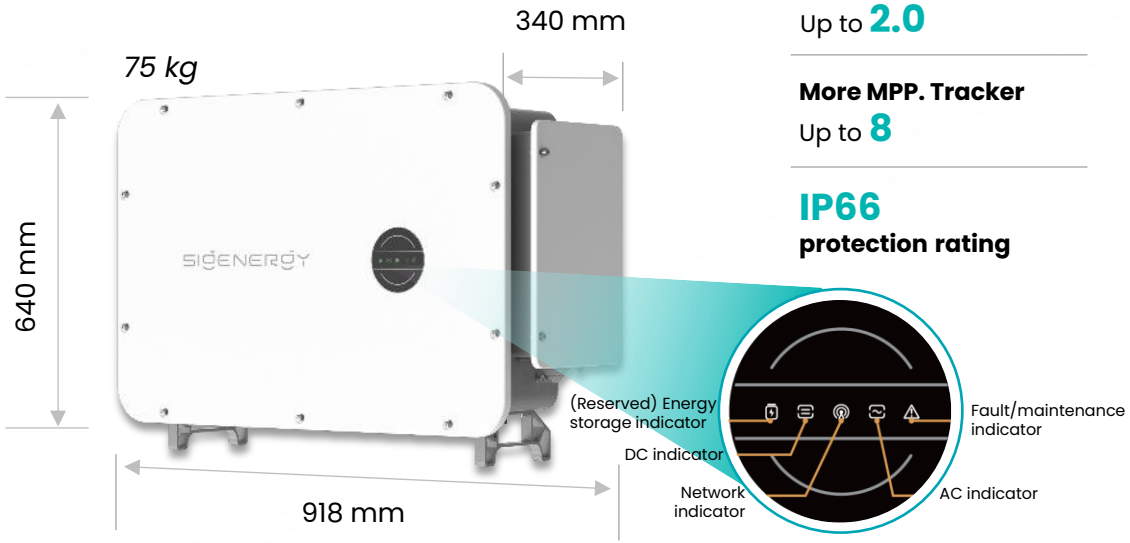

Higher DC/AC ratio
Up to **2.0**

More MPP. Tracker
Up to **8**

IP66
protection rating

Nominal output power (kW)	50	60	80	100	110	125
Max. output power (kW)	55	66	88	110	121	137.5
Max. input current per MPPT (A)	32	32	32	32	32	40
	4 MPPT	5 MPPT	6 MPPT	8 MPPT		

Sigen PV Inverter ports demonstration

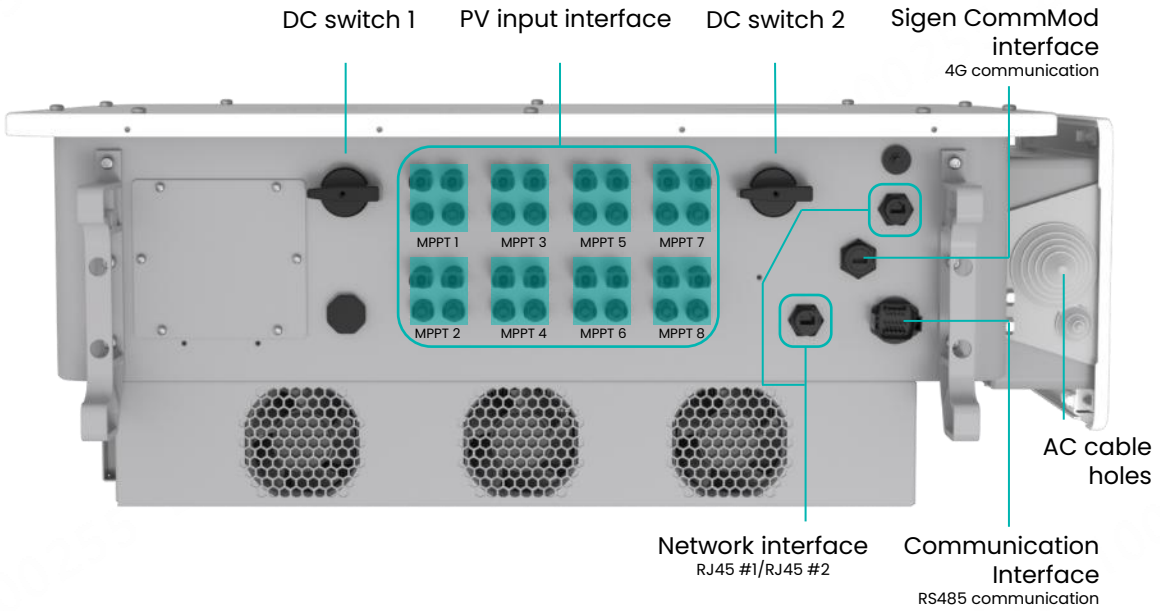

Nominal output voltage: 220/380V, 230/400V

Communication: WLAN / Fast Ethernet / RS485 / Sigen CommMod (4G/3G/2G)

Sigen Hybrid Inverter, **Battery Ready for ESS**

Sigen Hybrid Inverter

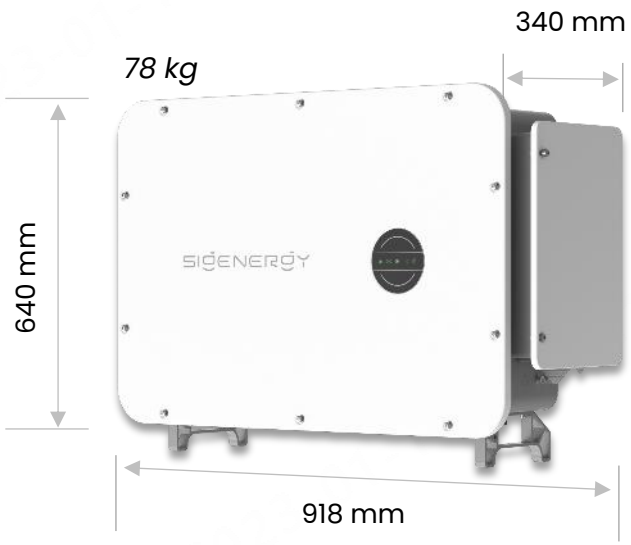

Higher DC/AC ratio
Up to **2.0**

More MPP. Tracker
Up to **8**

IP66
protection rating

SigenStack
Compatible Battery

Max. operating current
180 A

Nominal output power (kW)	50	60	80	100	110	125
Max. output power (kW)	55	66	88	110	121	137.5
Max. input current per MPPT (A)	32	32	32	32	32	40
	4 MPPT	5 MPPT	6 MPPT	8 MPPT		

Sigen Hybrid Inverter ports demonstration

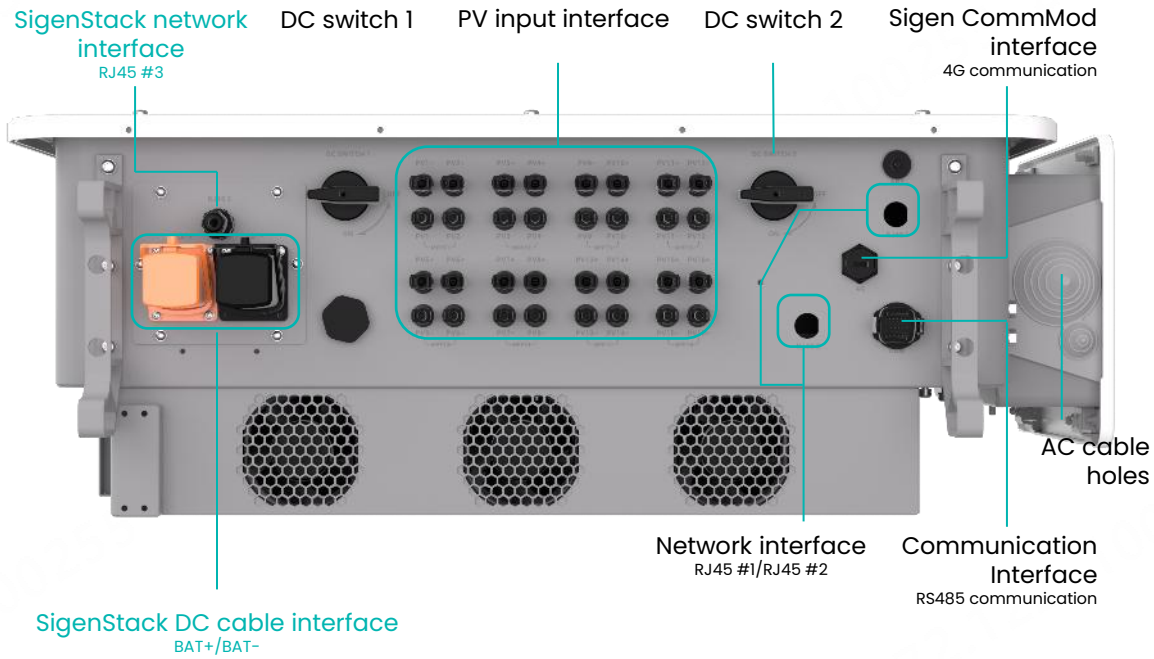

Nominal output voltage: 220/380V, 230/400V, **277/480V**

Communication: WLAN / Fast Ethernet / RS485 / Sigen CommMod (4G/3G/2G)

SigenStack, Innovative Modular BESS Energy Solution

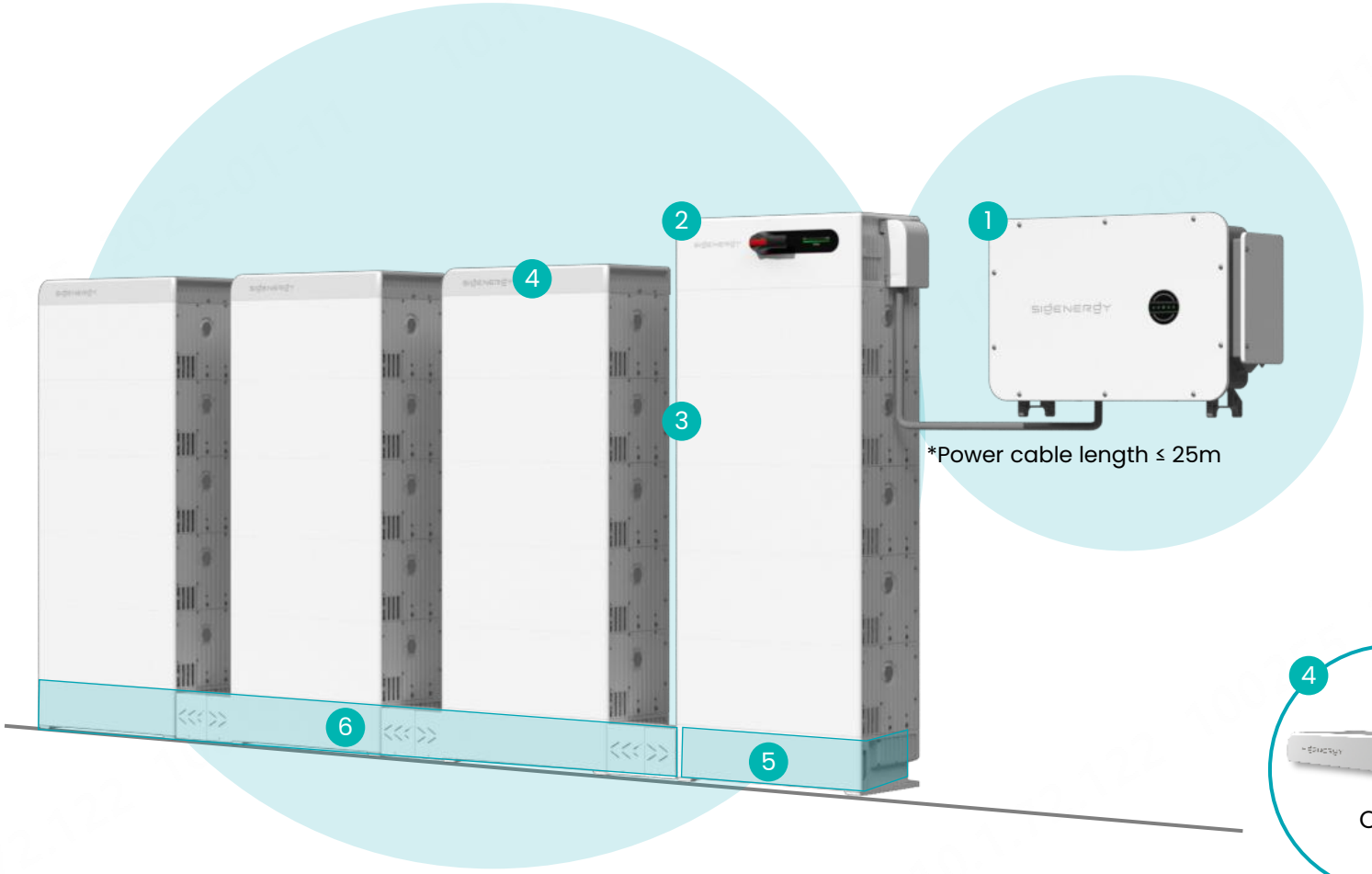

1 Sigen Hybrid Inverter

50/60/80/100/110/125 kW

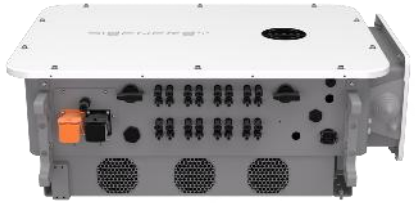

2 Battery Controller

180 A Max. output current



3 Battery Module

Model: SigenStack BAT 12.0

12.06 kWh energy capacity per module

4 ~ 21 modules connected per inverter



4 Cover



5 Base MAIN
0.5C/1C



6 Base SUB
0.5C/1C



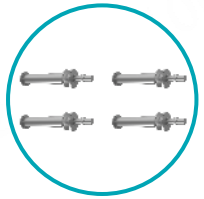

Handles
1 inverter with 1 set
recommended

Basic Principles of Configuration

Limitation of module number and height

4~21 modules per system

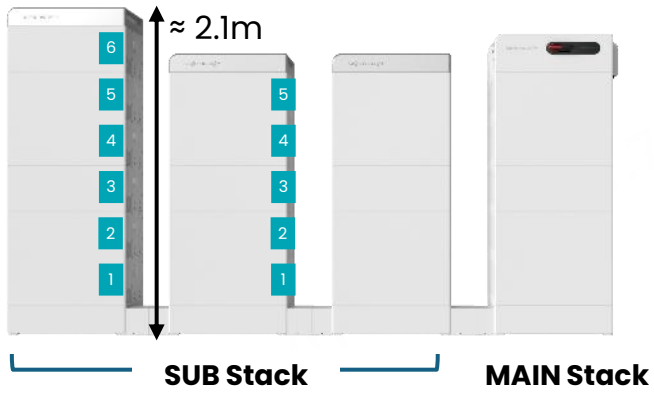

≤5 modules

For security and ease of O&M

6/7 modules

Should Install with additional fixed structures

What is Battery Controller ?



Models:

1. SigenStack BC M2-0.5C
2. SigenStack BC M2-1C-BST
3. SigenStack BC M2-0.5C-BST

M2: Support 1250V input Voltage

can connect more batteries when M2 inverter is configured

BST: With DC-DC Boost Module

Use it when number of battery module ≤ 19

Use it for PV + ESS (DC coupling) projects

Type of SigenStack Base



SigenStack Base SUB-0.5C

SigenStack Base SUB-1C



SigenStack Base MAIN-0.5C

SigenStack Base MAIN-1C



SigenStack Base 4S-0.5C

SigenStack BC & Base Ports Demonstration

SigenStack BC ports demonstration

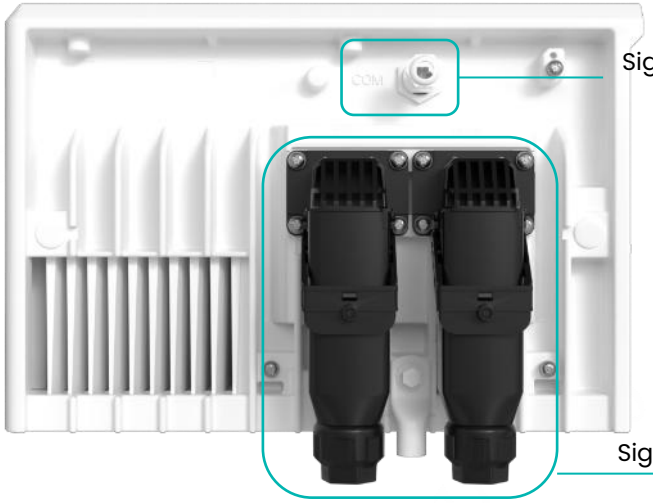

Note:

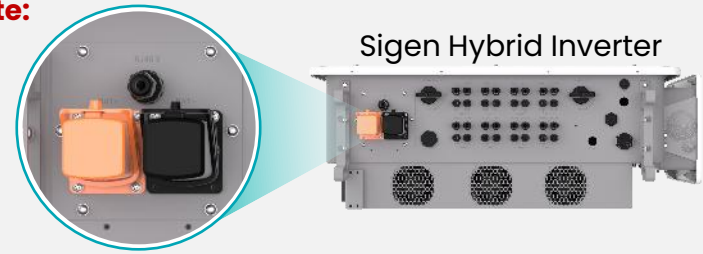

*The *PE cable, Power cable and Signal cable between the inverter and the battery controller* need to be prepared by installer

SigenStack Bases ports demonstration

Base SUB **0.5C/1C**

Front view

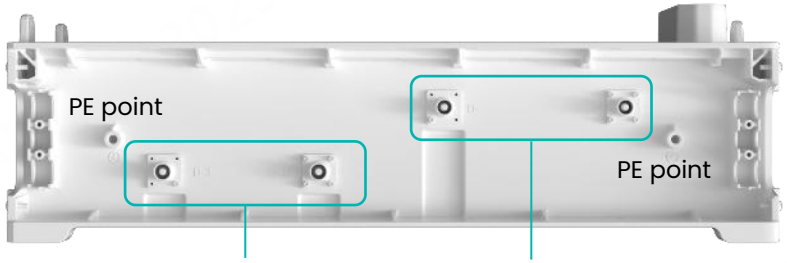

Right view

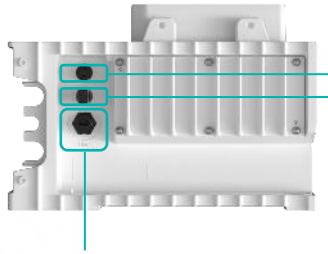

Base Main **0.5C/1C**

Front view

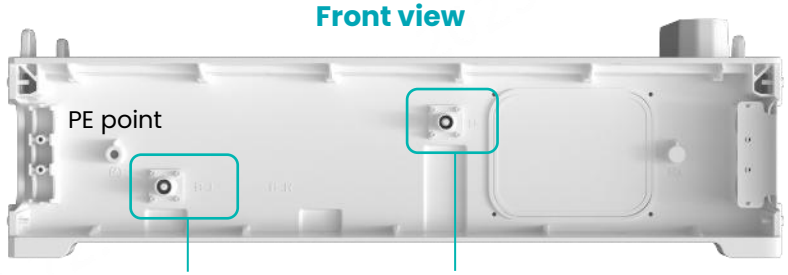

Left view

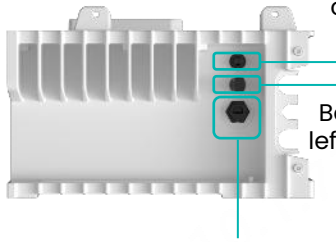

Cable Connection between SUB and Main Bases

Power Cable and PE Cable Connection

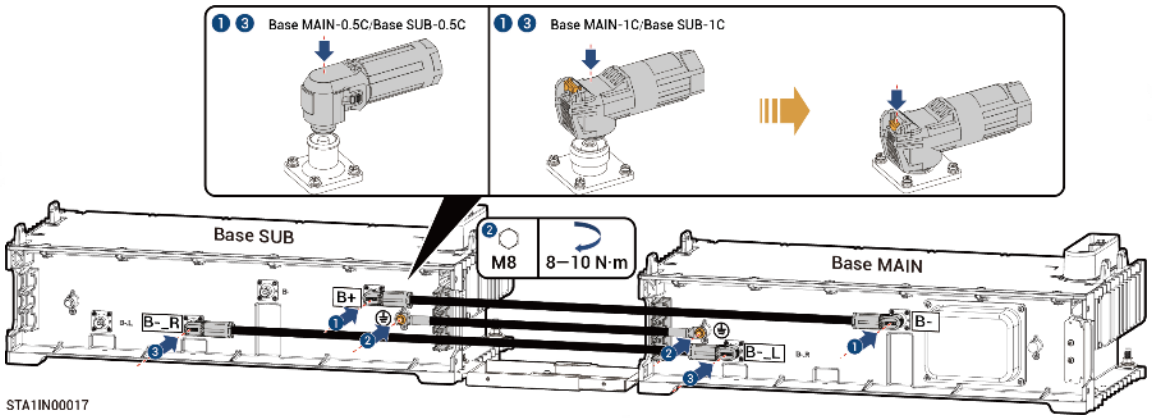

Connection between Base SUB and Base SUB	
Base SUB	**Base SUB**
B+	B-
⏚	⏚
B-_R	B-_L

Connection between Base SUB and Base MAIN	
Base SUB	**Base MAIN**
B+	B-
⏚	⏚
B-_R	B-_L

Aux. Power Supply, Balancing & Comm. Cables Connection

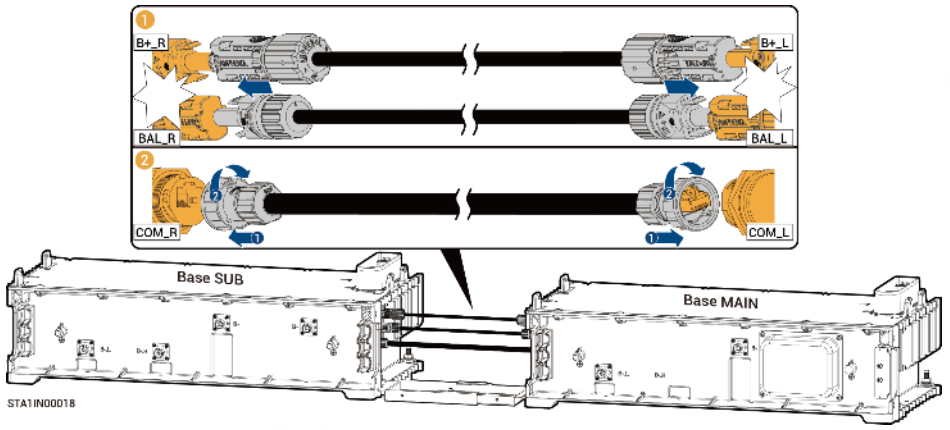

Connection between Base SUB and Base SUB	
Base SUB	**Base SUB**
B+_R	B+_L
BAL_R	BAL_L
COM_R	COM_L

Connection between Base SUB and Base MAIN	
Base SUB	**Base MAIN**
B+_R	B+_L
BAL_R	BAL_L
COM_R	COM_L

Note: Cables are supplied with the packing box.

Jumper Cable Connection

Cable Connection for the leftmost SUB base

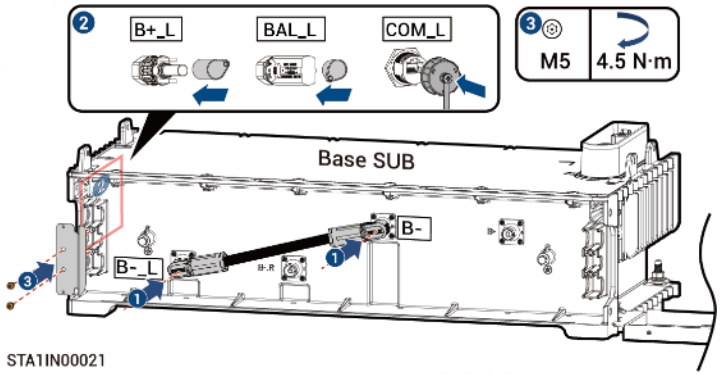

STA1IN00021

Cable Connection with Only the MAIN Base Used

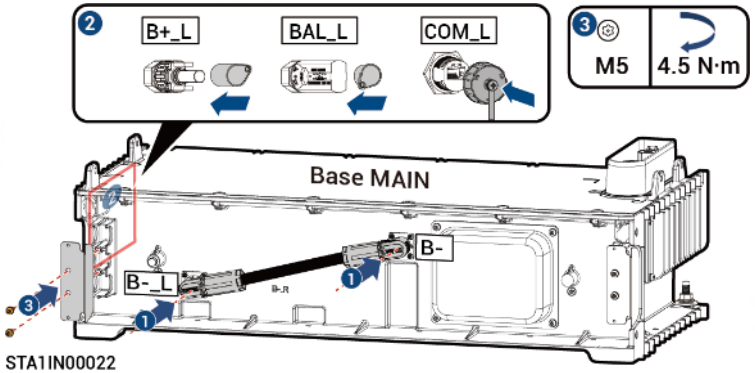

STA1IN00022

1. Please use **Jumper Cable** to connect **B- and B-_L**
2. Please use **terminal plugs** to seal **B+_L, BAL_L and COM_L**

Note: Cables and terminal plugs are supplied with the packing box.

0.5C Scenario, System Scale - (96kWh ~ 145kWh)

0.5C Scenario 1 | 96kWh ~ 145kWh

1



× **1** pcs

SigenStack BC M2-0.5C-BST

4



× **1** pcs

SigenStack Base MAIN-0.5C
(the cables, cable protection covers and terminal plugs are **included**)

4



× **1** pcs

SigenStack Base SUB-0.5C
(the cables, cable protection covers and terminal plugs are **included**)

2

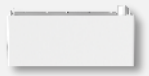

× **8~12** pcs

SigenStack BAT 12.0

3



× **1** pcs

SigenStack Cover

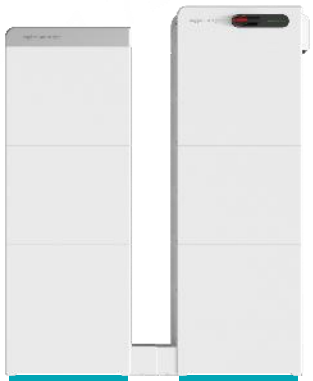

SUB Stack MAIN Stack

Recommended System Configuration

Capacity (kWh)	Packs	Packs of SUB Stack	Packs of MAIN Stack	Cover	Recommended inverters
96	8	4	4	1	Sigen PV 50M1-HYA
109	9	5	4	1	Sigen PV 50M1-HYA
121	10	5	5	1	Sigen PV 60M1-HYA
133	11	6	5	1	Sigen PV 80M1-HYA
145	12	6	6	1	Sigen PV 80M1-HYA

0.5C Scenario, System Scale - (157kWh ~ 217kWh)

0.5C Scenario 2 | 157kWh ~ 217kWh

1



× 1 pcs

SigenStack BC M2-0.5C-BST

4



× 1 pcs

SigenStack Base MAIN-0.5C
(the cables, cable protection covers and terminal plugs are **included**)

4



× 2 pcs

SigenStack Base SUB-0.5C
(the cables, cable protection covers and terminal plugs are **included**)

2

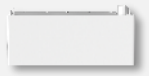

×**13~18** pcs

SigenStack BAT 12.0

3



× **2** pcs

SigenStack Cover



Recommended System Configuration

Capacity (kWh)	Packs	Packs of SUB Stack 2	Packs of SUB Stack 1	Packs of MAIN Stack	Cover	Recommended inverters
157	13	5	4	4	2	Sigen PV 80M1-HYA
169	14	5	5	4	2	Sigen PV 80M1-HYA
181	15	5	5	5	2	Sigen PV 100M1-HYA
193	16	6	5	5	2	Sigen PV 100M1-HYA
205	17	6	6	5	2	Sigen PV 100M1-HYA
217	18	6	6	6	2	Sigen PV 110M1-HYA

0.5C Scenario, System Scale - (229kWh)

0.5C Scenario 3 | 229kWh

1  × **1** pcs

SigenStack BC M2-0.5C-BST

4-1*  × **1** pcs

SigenStack Base 4S-0.5C
(the cables, cable protection covers and terminal plugs are **pre-installed**)

2  × **19** pcs

SigenStack BAT 12.0

4-2*  × **1** pcs

SigenStack Base MAIN-0.5C
(the cables, cable protection covers and terminal plugs are **included**)

4-2*  × **3** pcs

SigenStack Base SUB-0.5C
(the cables, cable protection covers and terminal plugs are **included**)

3  × **3** pcs

SigenStack Cover

Recommended System Configuration

Capacity (kWh)	Packs	Packs of SUB Stack 3	Packs of SUB Stack 2	Packs of SUB Stack 1	Packs of MAIN Stack	Cover	Recommended inverters
229	19	5	5	5	4	3	Sigen PV 110M1-HYA

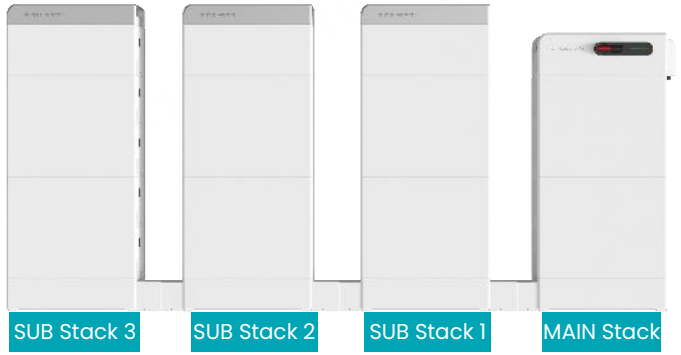

*Note: Please choose either Option 4-1 or 4-2. Option 4-1 is more suitable for the standard design of large-scale projects, while Option 4-2 is more appropriate for stockpiling in small-scale C&I businesses

0.5C Scenario, System Scale - (241kWh ~ 253kWh)

0.5C Scenario 3 — 229kWh

1 × **1** pcs
SigenStack BC M2-0.5C*

4-1** × **1** pcs
SigenStack Base 4S-0.5C
(the cables, cable protection cover and terminal plugs are **pre-installed**)

2 × **20/21** pcs
SigenStack BAT 12.0

4-2** × **1** pcs
SigenStack Base MAIN-0.5C
(the cables, cable protection cover and terminal plugs are **included**)

4-2** × **3** pcs
SigenStack Base SUB-0.5C
(the cables, cable protection cover and terminal plugs are **included**)

3 × **3** pcs
SigenStack Cover

Recommended System Configuration

Capacity (kWh)	Packs	Packs of SUB Stack 3	Packs of SUB Stack 2	Packs of SUB Stack 1	Packs of MAIN Stack	Cover	Recommended inverters
241	20	5	5	5	5	3	Sigen PV 125M1-HYA
253	21	6	5	5	5	3	Sigen PV 125M1-HYA



*Note: For PV+ESS DC coupling system, Battery controller should always use the model with "BST" (SigenStack BC M2-0.5C-BST)
**Note: Please choose either Option 4-1 or 4-2. Option 4-1 is more suitable for the standard design of large-scale projects, while Option 4-2 is more appropriate for stockpiling in small-scale C&I businesses

1C Scenario, System Scale - (48kWh ~ 72kWh)

1C Scenario 1 | 48kWh ~ 72kWh

1  × 1 pcs
SigenStack BC M2-1C-BST

2 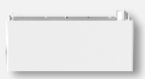 × 4~6 pcs
SigenStack BAT 12.0

3  × 1 pcs
SigenStack Base MAIN-1C
(the cables, cable protection covers and terminal plugs are **included**)


MAIN Stack

Recommended System Configuration

Capacity (kWh)	Packs	Packs of MAIN Stack	Cover	Recommended inverters
48	4	4	/	Sigen PV 50M1-HYA
60	5	5	/	Sigen PV 60M1-HYA
72	6	6	/	Sigen PV 80M1-HYA

1C Scenario, System Scale - (84kWh ~ 121kWh)

1C Scenario 2 | 84kWh ~ 121kWh

1  × 1 pcs
SigenStack BC M2-1C-BST

2 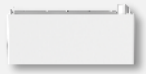 × 7~10 pcs
SigenStack BAT 12.0

3  × 1 pcs
SigenStack Cover

4  × 1 pcs
SigenStack Base MAIN-1C
(the cables, cable protection covers and terminal plugs are **included**)

4  × 1 pcs
SigenStack Base SUB-1C
(the cables, cable protection covers and terminal plugs are **included**)


SUB Stack MAIN Stack

Recommended System Configuration

Capacity (kWh)	Packs	Packs of SUB Stack	Packs of MAIN Stack	Cover	Recommended inverters
84	7	4	3	1	Sigen PV 80M1-HYA
96	8	4	4	1	Sigen PV 100M1-HYA
109	9	5	4	1	Sigen PV 110M1-HYA
121	10	5	5	1	Sigen PV 125M1-HYA

SigenStack on-grid solution, large-scale PV+BESS

Any Sigen Hybrid Inverter can be a master unit – less than or equal to 100 inverters

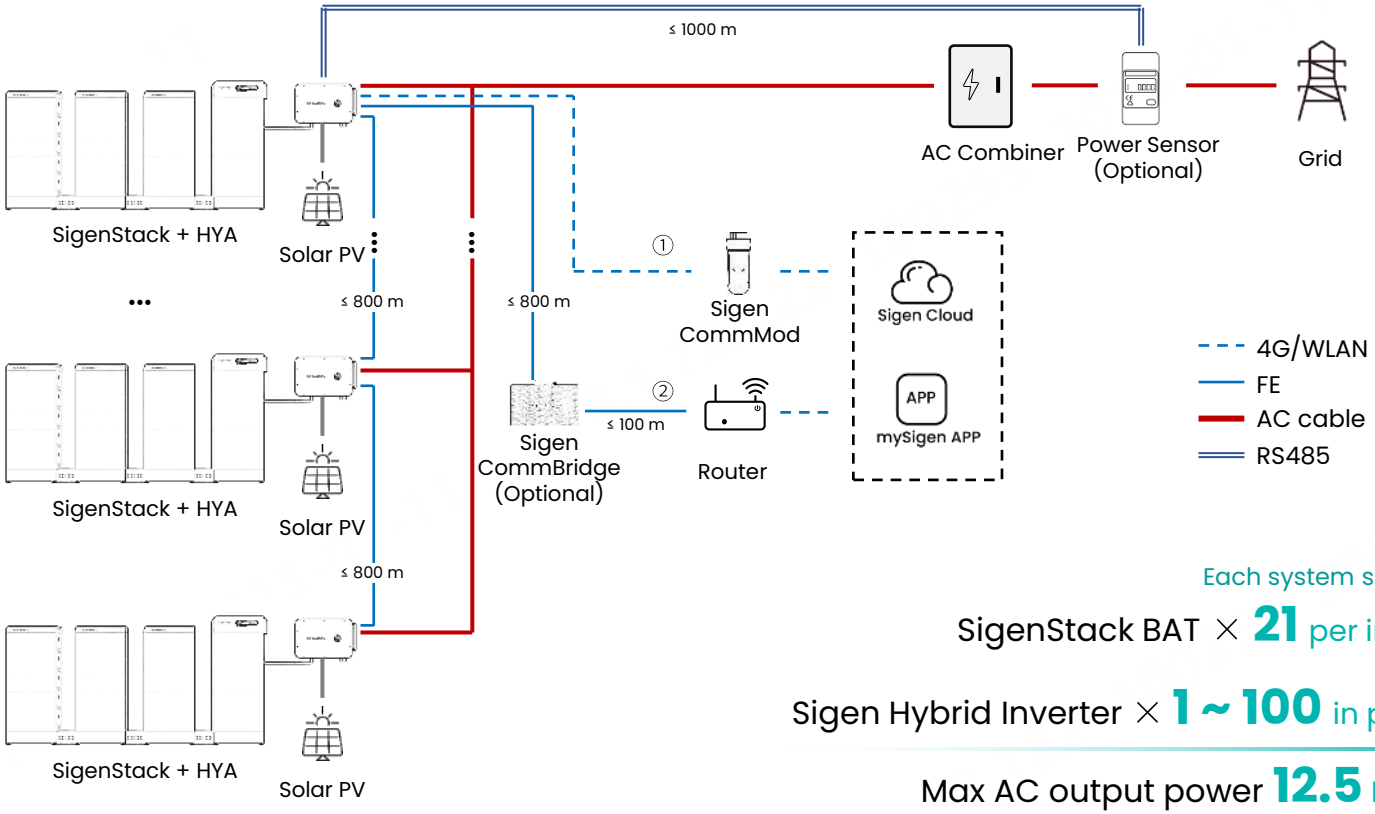

Communication distance:

RS485 cables ≤ 1000 m

FE cables ≤ 800 m

**For communication with third party devices, FE ≤ 100 m*

Each system supports :

SigenStack BAT × **21** per inverter

Sigen Hybrid Inverter × **1 ~ 100** in parallel

Max AC output power **12.5** MWac*

Max. ESS capacity **25** MWh*

**Take Sigen Hybrid Inverter 125 kW & SigenStack BAT 12.0 as an example*



Sigen Hybrid Inverter

Sigen PV 50/60/80/100/110/125M1-HYA



SigenStack

SigenStack BC M2-0.5C
SigenStack BC M2-0.5C-BST
SigenStack BC M2-1C-BST
SigenStack BAT 12.0



Sigen Communication Module

Sigen CommBridge



Sigen Communication Module

Sigen CommMod





Sigen Power Sensor

Sigen Sensor TP-CT120-DH
Sigen Sensor TP-CT300-DH
Sigen Sensor TP-CT600-DH
Sigen Sensor TPX-CH

SigenStack on-grid solution, expand with data logger

Sigen Data Logger is a master unit – less than or equal to 160 inverters

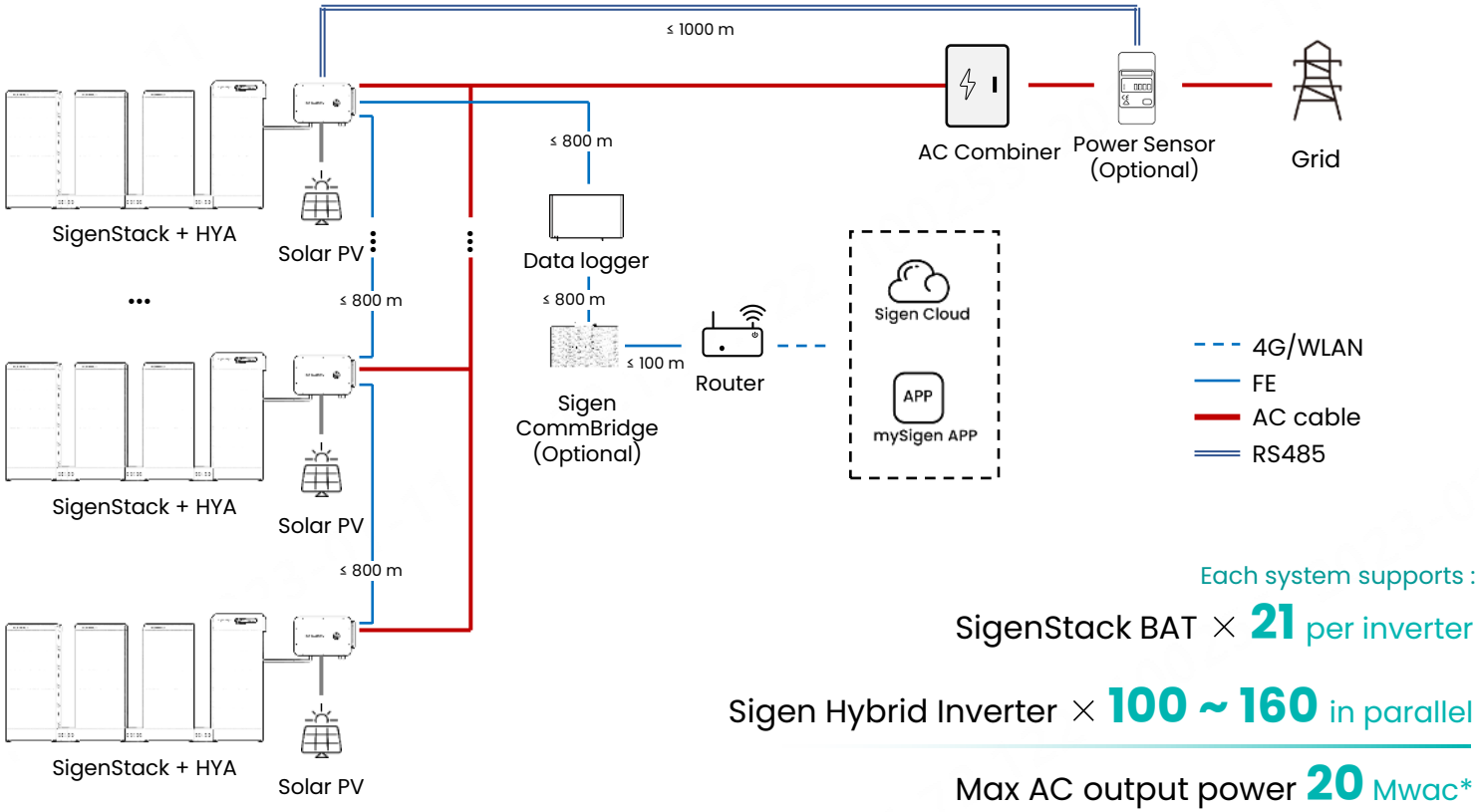

Communication distance:

RS485 cables ≤ 1000 m

FE cables ≤ 800 m

**For communication with third party devices, FE ≤ 100 m*

Each system supports :

SigenStack BAT × **21** per inverter

Sigen Hybrid Inverter × **100 ~ 160** in parallel

Max AC output power **20** Mwac*

Max. ESS capacity **40** MWh*

**Take Sigen Hybrid Inverter 125 kW & SigenStack BAT 12.0 as an example*



Sigen Hybrid Inverter

Sigen PV 50/60/80/100/110/125M1-HYA



SigenStack

SigenStack BC M2-0.5C
SigenStack BC M2-0.5C-BST
SigenStack BC M2-1C-BST
SigenStack BAT 12.0



Sigen Communication Module

Sigen CommBridge



Sigen Data Logger

Sigen Logger A1-01



Sigen Power Sensor

Sigen Sensor TPX-CH

Sigen PV inverter, large-scale solar PV

Any Sigen PV Inverter can be a master unit – less than or equal to 100 inverters

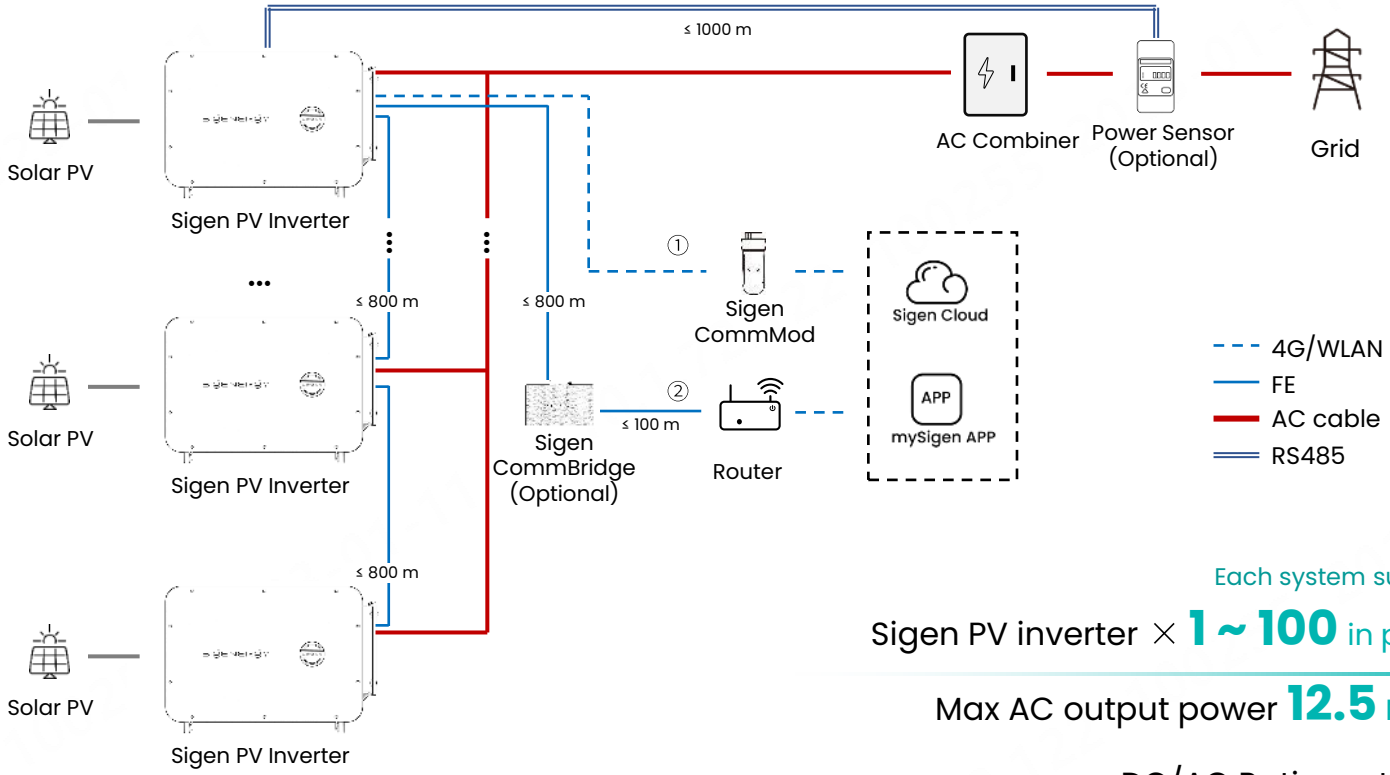

Each system supports :

Sigen PV inverter × **1 ~ 100** in parallel

Max AC output power **12.5** MWac*

DC/AC Ratio up to **2.0**

**Take Sigen PV Inverter 125 kW as an example*

Communication distance:

RS485 cables ≤ 1000 m

FE cables ≤ 800 m

**For communication with third party devices, FE ≤ 100 m*



Sigen PV Inverter

Sigen PV 50/60/80/100/110/125M1



Sigen Communication Module

Sigen CommBridge



Sigen Communication Module

Sigen CommMod



Sigen Power Sensor

Sigen Sensor TP-CT120-DH

Sigen Sensor TP-CT300-DH

Sigen Sensor TP-CT600-DH

Sigen Sensor TPX-CH

Sigen PV inverter, expand with data logger

Sigen Data Logger is a master unit – less than or equal to 160 inverters

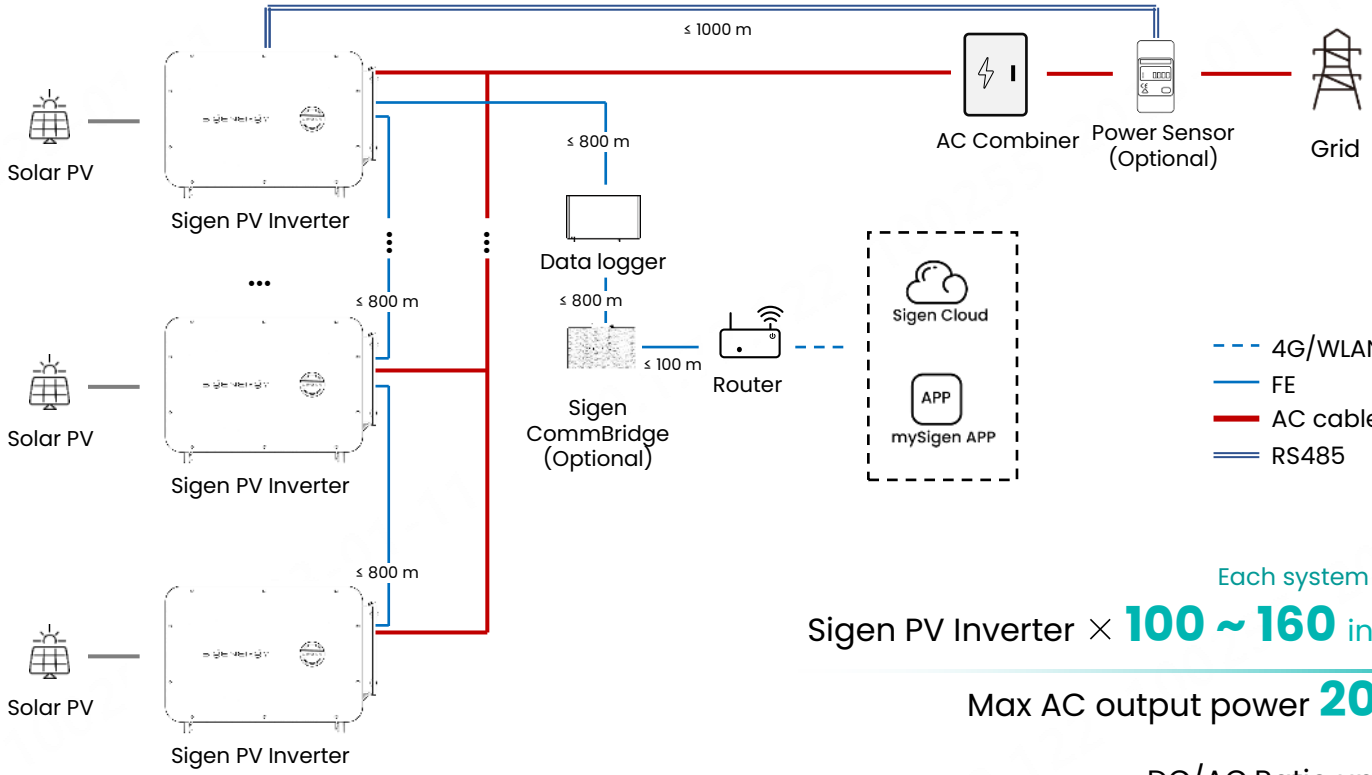

Communication distance:

RS485 cables ≤ 1000 m

FE cables ≤ 800 m

**For communication with third party devices, FE ≤ 100 m*

Each system supports :

Sigen PV Inverter × **100 ~ 160** in parallel

Max AC output power **20** MWac*

DC/AC Ratio up to **2.0**

**Take Sigen PV Inverter 125 kW as an example*



Sigen PV Inverter

Sigen PV 50/60/80/100/110/125M1



Sigen Communication Module

Sigen CommBridge



Sigen Data Logger

Sigen Logger A1-01



Sigen Power Sensor

Sigen Sensor TPX-CH

Thank you.

Enjoy Green Energy

© 2025 Sigenergy Technology Co., Ltd. All Rights Reserved

Disclaimer: The information on this file is provided on an “as is” basis. To the fullest extent permitted by law, Sigenergy Technology Co., Ltd. excludes all representations and warranties relating to this file and its contents or which is or may be provided by any affiliates or any other third party, including in relation to any inaccuracies or omissions in this file.