Connecting Strength

# Mounting systems



# Content

Everything at a glance – find the right system:

| Pitched roof | Page | Pantile | Plain Tile | Slate | Trapezoidal sheet metal | Trapezoidal sandwich panel | Corrugated sheet metal | Corrugated fibre cement | Standing seam | Bitumen |
|---|---|---|---|---|---|---|---|---|---|---|
| K2 SingleRail System | 6 | ● | ● | ○ | ○ | ○ | ● | ● | ● | ● |
| K2 SolidRail System | 7 | ● | ● | ● | ● | ● | ● | ● | ● | ○ |
| K2 Insertion System | 8 | ● | ● | ● | ● | ● | ● | ● | ○ | ○ |
| K2 MultiRail/MultiRail CSM System | 9 | ○ | ○ | ○ | ● | ○ | ● | ○ | ○ | ○ |
| K2 MiniRail System | 10 | ○ | ○ | ○ | ● | ○ | ○ | ○ | ○ | ○ |
| K2 BasicRail System | 11 | ○ | ○ | ○ | ● | ● | ○ | ○ | ○ | ○ |

| Flat roof | Page | Green roof | Gravel | Concrete | Membrane | Trapezoidal sheet metal | One-sided | Two-sided |
|---|---|---|---|---|---|---|---|---|
| K2 Dome 6 System | 14 | ● | ● | ● | ● | ● | ● | ● |
| K2 Dome Zero System | 15 | ● | ● | ● | ● | ○ | ○ | ○ |
| K2 TiltUp Vento System | 16 | ● | ● | ● | ○ | ○ | ● | ○ |
| K2 GreenRoof Vento System | 17 | ● | ● | ● | ○ | ○ | ● | ● |

## Warranty

We offer a 12-year warranty on all K2 components in the system:
*k2-systems.com/en/warranty*

## Facade

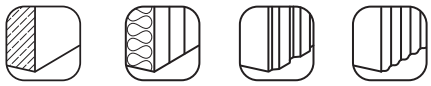



| | Page | | | | |
|---|---|---|---|---|---|
| K2 WallPV FacadeRail System | 20 | ● | ○ | ○ | ○ |
| K2 WallPV CarrierRail System | 21 | ○ | ● | ○ | ○ |
| K2 WallPV MultiRail System<br>MultiRail CSM System | 22 | ○ | ○ | ● | ● |


## Ground mounted


| | Page |
|---|---|
| K2 N-Rack System | 26 |
| K2 A-Rack/P-Rack System | 27 |


● Suitable ○ Unsuitable



# Pitched Roof



# K2 SingleRail System

Extensive range of rails suitable for various load cases and many spans. Direct lateral connection to the rail enables fast and cost-effective installation. Individual height adjustment provides additional flexibility during installation.

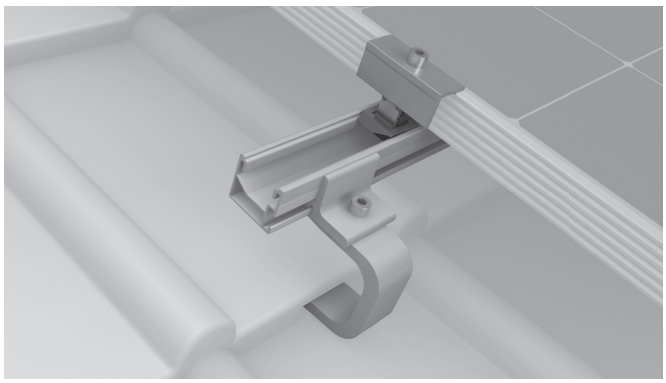

## Roof tiles and slate

- Roof hooks for the majority of clay tiles, pantiles and concrete roof tiles
- Simple height adjustment on base plate, cantilever or on slotted hole connection
- 80% of all applications can be solved with SingleHook 3S or 4S

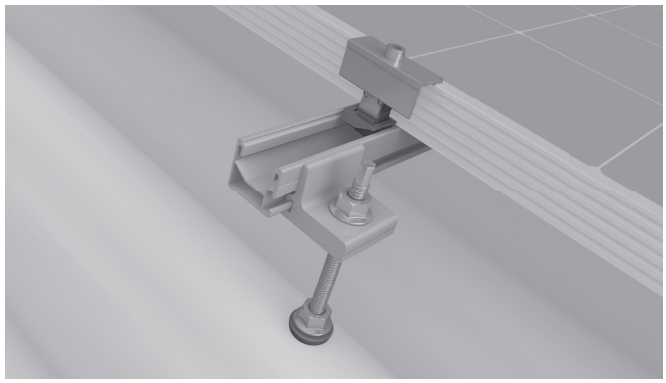

## Corrugated fibre cement and corrugated sheet metal

- For all corrugated fibre cement and corrugated sheet metal roofing with wooden substructure
- Secure sealing on the roofing
- Climber connection
- abZ (general technical approval) in Germany

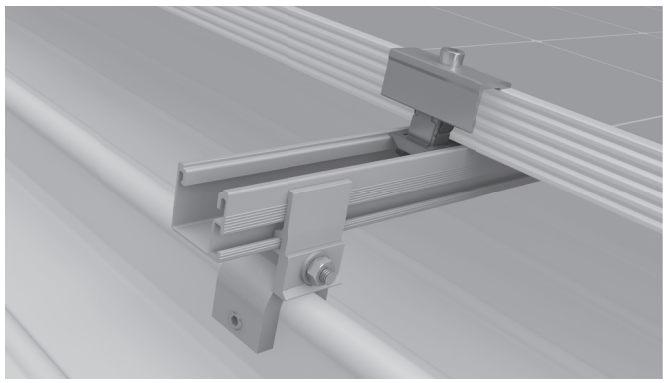

## Standing seam

- Multitude of application possibilities: Double standing seam, angled seam, snap seam and round seam
- Direct lateral rail connection
- Penetration-free assembly

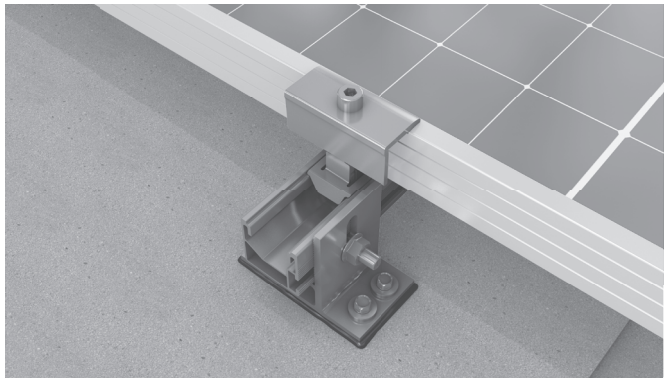

## Bitumen

- Mounting with the SpliceFoot
- Fastening in the rafter or in the wooden boarding
- Watertight sealing due to butyl layer pre-mounted on the component

Further information, **all technical data and components**

# K2 SolidRail System

Extensive range of rails suitable for various load cases and many spans. Can be easily and quickly installed on brick, corrugated sheet metal and sheet metal folds.

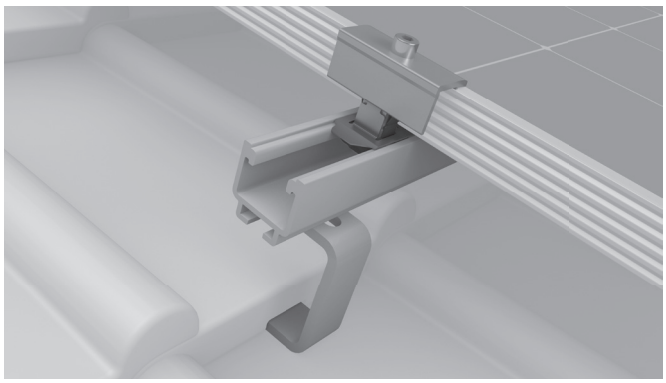

## Roof tiles and slate

- Roof hooks for the majority of clay tiles, pantiles and concrete roof tiles
- Stainless steel roof hooks for tiles with low machining possibilities
- Flexibility is ensured by the adjustable connection in order to be able to install even with narrow rafters or different heights

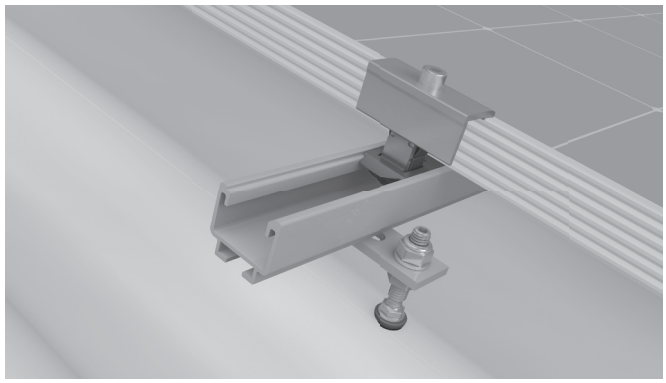

## Corrugated fibre cement and corrugated sheet metal

- For all corrugated fibre cement and corrugated sheet metal roofing with timber or steel substructure
- Secure sealing at the roofing
- abZ (general technical approval) in Germany

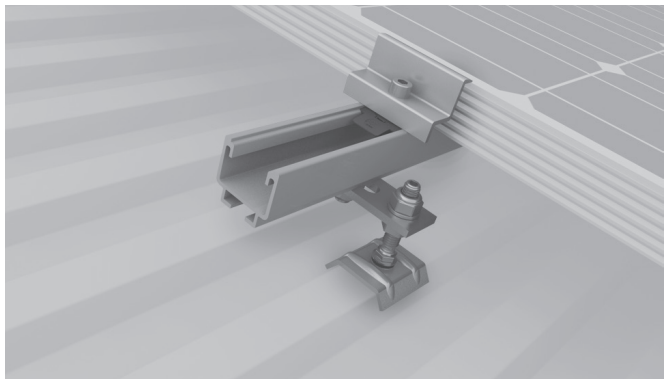

## Trapezoidal sheet metal

- Mounting with solar fasteners on trapezoidal sheet metal and sandwich element roofing.
- Fastening in the steel or wooden substructure
- abZ (general building approval) in Germany.

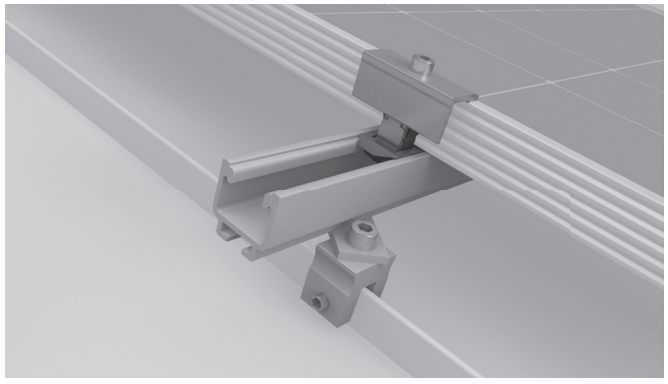

## Standing seam

- Many application possibilities: Double standing seam, angled seam, snap seam and round seam
- Penetration-free assembly

Further information, **all technical data and components**

# K2 Insertion System

For a shapely overall appearance without the need for module clamps. The closed surface forms an attractive roof construction with no gaps or additional edges. Lightning-fast installation of modules due to unique rail profile without screws, module clamps or assistance.

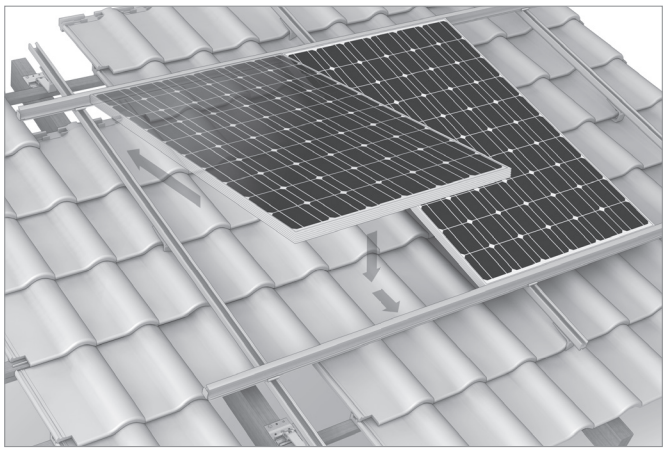

## Roof tiles and slate

- Roof hooks for majority of clay tiles, pantiles and concrete tiles as well as roofing tiles
- Simple height adjustment on base plate or bracket
- 80% of all applications can be solved with SolidHook 3S+ or 4S+ solvable

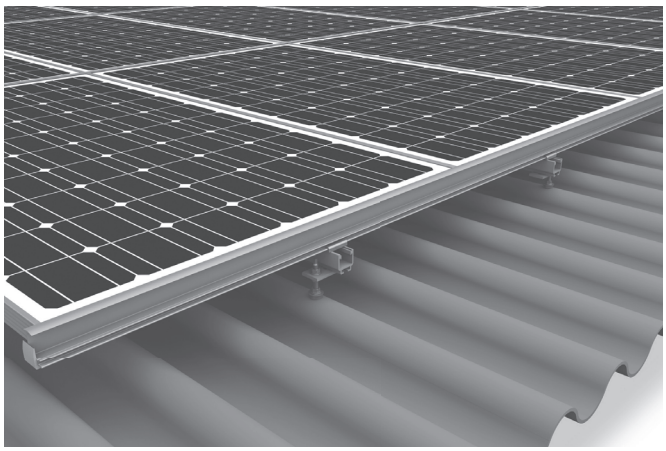

## Corrugated fibre cement and corrugated sheet metal

- For all corrugated fibre cement and corrugated sheet metal roofing with wooden substructure
- Climber connection possible
- abZ (general technical approval) in Germany
- Further connection with MultiRail CSM on corrugated sheet metal possible

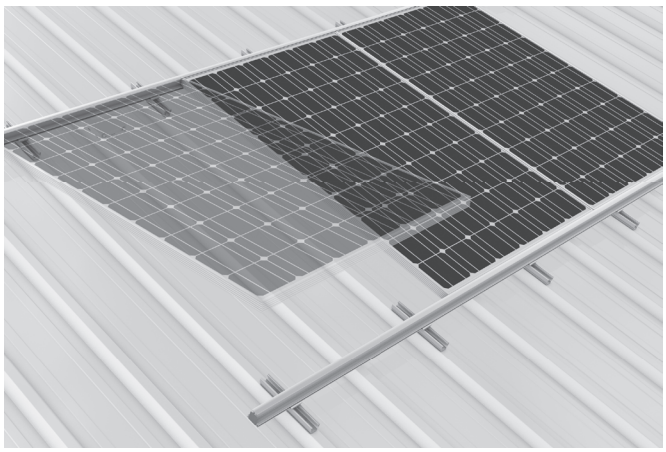

## Trapezoidal sheet metal

- Connection with MultiRail mounting rail
- Simple assembly and quick planning with few components

Further information,
**all technical data and components**

# K2 MultiRail System

Roof connection and mounting rail in one component. Quick planning with little use of materials is possible.
The system can be easily installed on pitched roofs from 5 – 75° with trapezoidal sheet metal and corrugated sheet metal. No pre-drilling or time-consuming fixing in the roof substructure is necessary during installation.

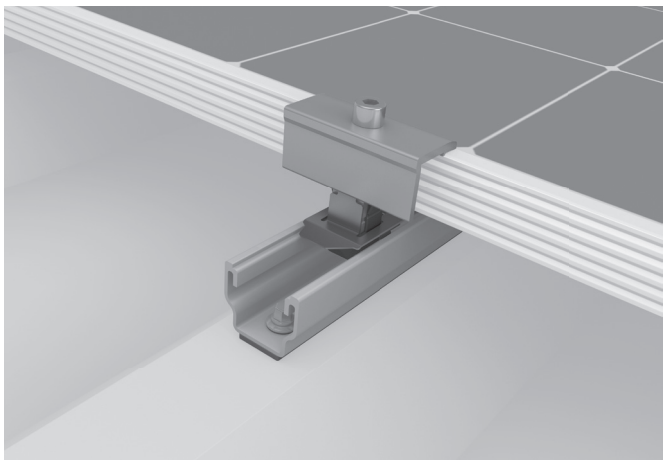

## K2 MultiRail

- Mounting with only one component on trapezoidal sheet metal and sandwich elements
- Short rail available in different lengths for different applications such as high load requirements

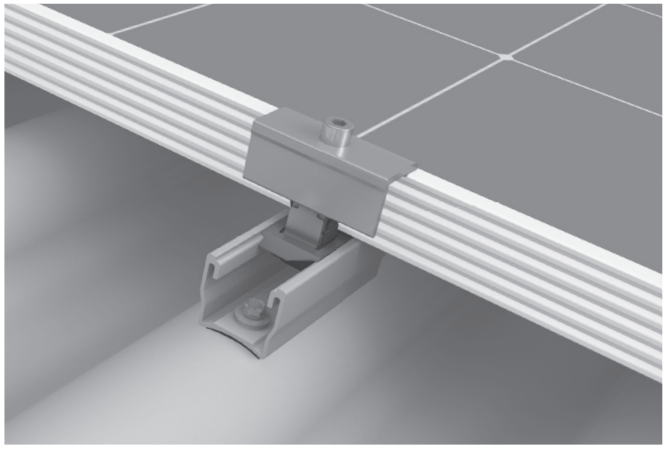

## K2 MultiRail CSM

- Quick and easy installation on corrugated sheet metal
- Various lengths available

## System-Highlights

### With elevation for more yield

- Combination of the MulitRail and components from our flat-roof system Dome 6
- Better irradiation angle and thus higher yield

### RailUp for more profit

- Elevation results in improved ventilation of the modules and thus the possibility for higher yields
- Easy installation of micro-inverters and power optimisers

Further information,
**all technical data and components**

# K2 MiniRail System

The system's compact dimensions allow for small packing dimensions and low weight. This results in optimised storage and easy transport. No pre-drilling or time-consuming fixing in the roof substructure is necessary during installation.

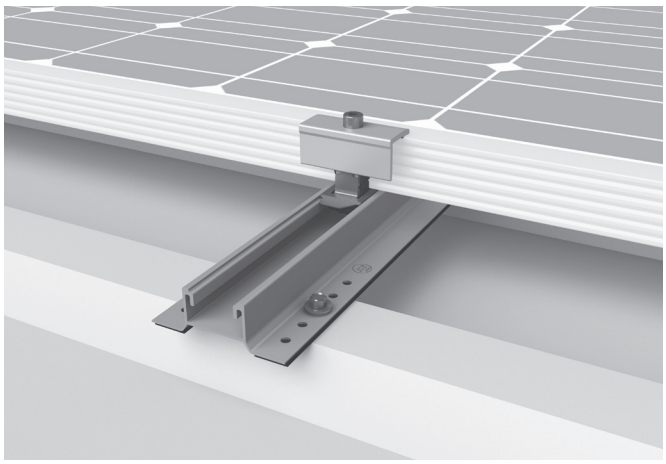

## K2 MiniRail MK2

- Simple and fast installation due to a small range of components required
- MK2 rail channel enables mounting with the same module clamp on all pitched roof systems

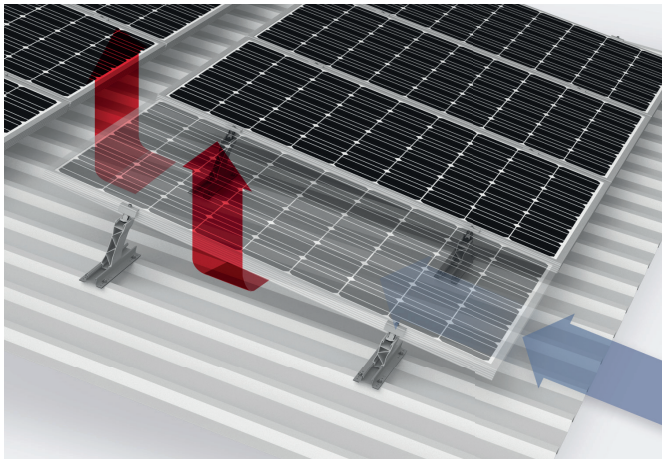

## K2 MiniFive MK2

- Additional 5° inclination possible with easy to install MiniFive MK2
- Improved rear ventilation and more yield
- Optimisation of module inclination and angle of incidence

## System-Highlights

### RailUp for more yield

- Elevation results in improved ventilation of the modules and thus the possibility for higher yields
- Easy installation of micro-inverters and power optimisers

Further information,
**all technical data and components**

# K2 BasicRail System

Only four installations steps required and suitable for high loads. Controlled thermal expansion in rail direction through the floating rail fixation of the BasicClip. The system has general building authority approval (abZ) in Germany. No pre-drilling or time-consuming fixing in the roof substructure is necessary during installation.

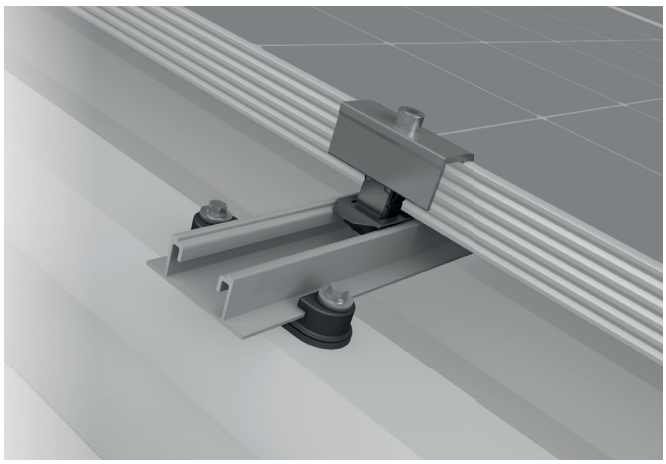

### Controlled linear expansion

- The floating rail fixation of the BasicClip results in a controlled thermal expansion of the rail.
- No transfer of forces to the roof cladding

## System-Highlights

### Landscape mounting option

- Landscape mounting is possible with the K2 AddOn
- Seamless module blocks without additional rail layer

### Mounting on sandwich panels

- BasicRail System suitable for sandwich roofs
- abZ (general building authority approval) for FischerTHERM sandwich elements
- High installation speed of the BasicRail system and direct fastening in the sandwich elements

### RailUp for more yield

- Elevation results in improved ventilation of the modules and thus the possibility for higher yields
- Easy installation of micro-inverters and power optimisers

Further information,
**all technical data and components**



# Flat Roof



# K2 Dome 6 System

Suitable for the majority of flat roof coverings. Ballast optimisation through good aerodynamics and wind tunnel tests. A secure anchoring with fixed connection can be carried out on roofs with more than 3° or low load reserves. With an elevation of 15° (exclusively with the S-dome variant), a better angle of incidence can be created.

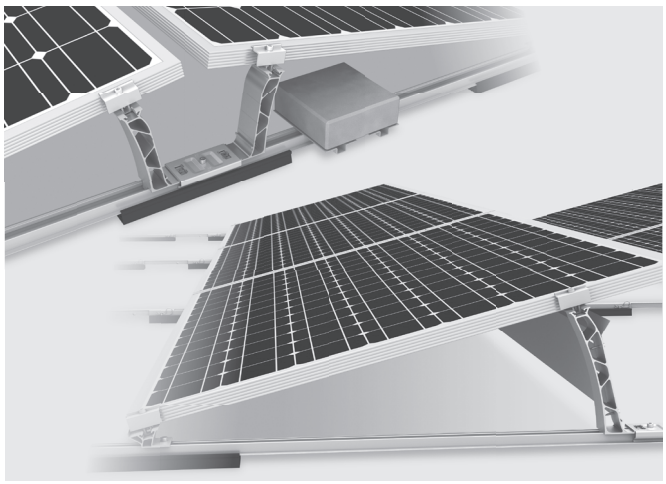

## K2 Dome 6 Xpress

- Super-fast assembly in just a few steps
- Time-saving alignment of the rails with Dome Speed Spacer
- Snap-in function for peaks and tool-free rail connectors



## K2 Dome 6 Classic

- For mounting standard size PV modules and flexible row spacing
- Easy mounting with many obstacles for full utilisation of the roof area

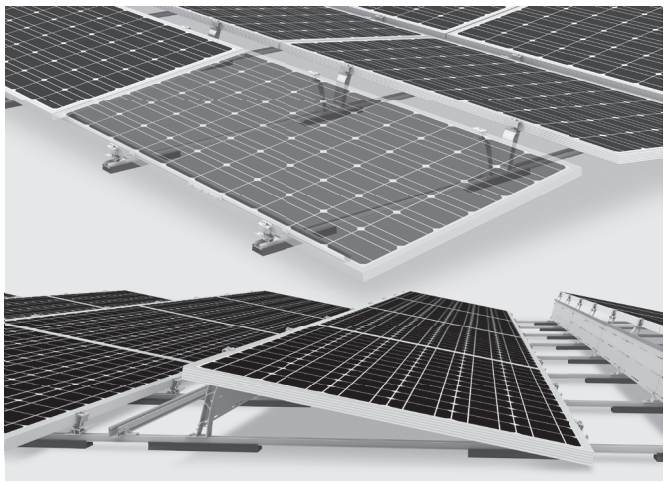

## K2 Dome 6 Classic LS

- Suitable for higher wind/snow loads and for larger modules up to 2390 × 1170 mm.
- Mounting on the long side of the module

Further information, **all technical data and components**

# K2 Dome Zero System

For roof-parallel mounting using many of the Dome 6 components. A secure anchorage with fixed connection can be made for roofs with more than 3° and low load reserves.

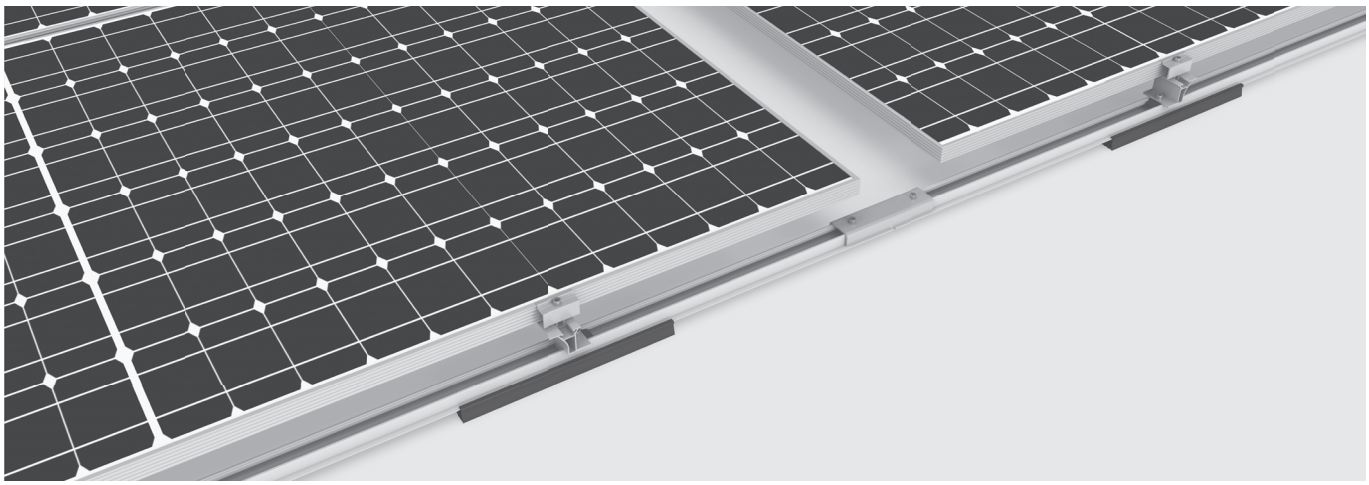

## System-Highlights

### Roof pitch up to 10°

- Dome FixPro S fixed connection enables use on roofs with a pitch of up to 10°.

### Few components

- Majority of components compatible with Dome 6 System
- For the elevation a 0° peak is used

### Less ballast

- Ballast-optimised with good aerodynamics and wind tunnel tests
- Enables use on roofs with low load reserves in combination with Dome FixPro S

Further information,
**all technical data and components**

# K2 TiltUp Vento System

Many different module arrangements as well as 3 different inclination angles (20°, 25°, 30°) are possible. Due to the flexible connection via ballasting with concrete foundation or as direct connection with concrete anchors, it can be mounted on many roofs.

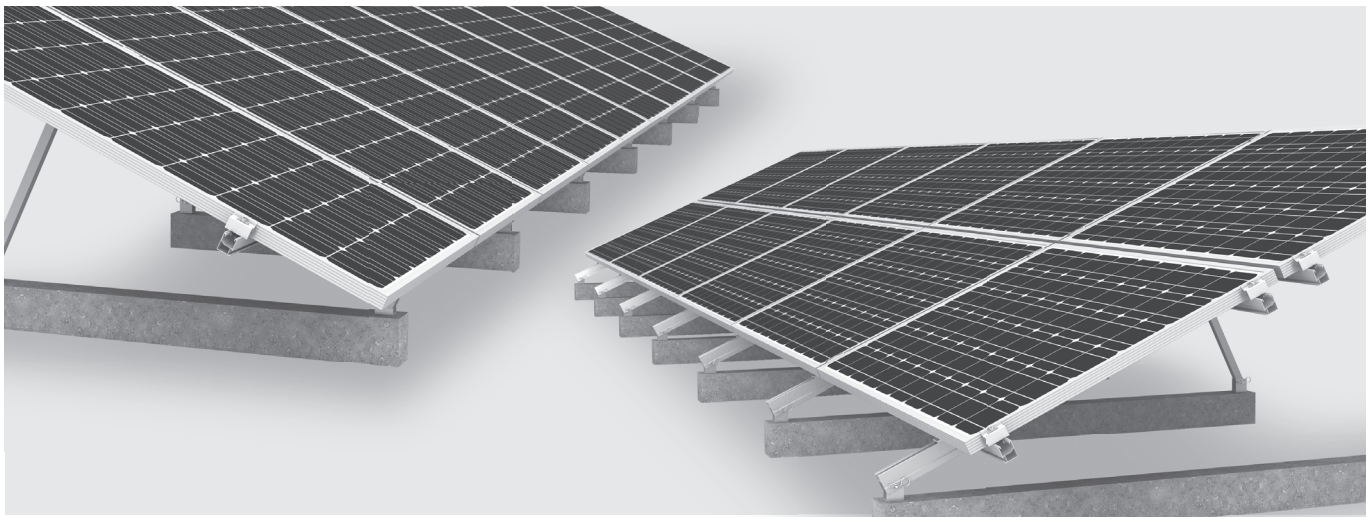

## System-Highlights

### Different roof connections

- Ballasted with concrete foundation
- Direct connection with concrete anchors possible

### 3 different inclination angles

- All module arrangements available in 3 inclination angles: 20°, 25° and 30°
- Component connections are the same throughout

### Different module designs

- Portrait/landscape mounting possible with the same components
- Clamping on the short or long module side

### Few components

- Sophisticated system with well thought-out connections with few components
- Enabling systemic storage

Further information,
**all technical data and components**

# K2 GreenRoof Vento System

Clever solution with a fixed stand on green roofs. Flexible module orientation and choice of mounting angle. Optimum conditions for plants thanks to large distances from the roof to the module.



## System-Highlights

### Flexible assembly

- Module orientation in portrait or landscape
- Flexible elevation: up to a module size of 2,400mm x 1,350mm, elevation of 10° and 15° possible
- Ensures optimum accessibility underneath the modules, as installation is possible both in an east/west direction and in a V-shape
- Spacing between module rows can also be variably positioned for east/west installation, allowing flexible adaptation to the roof structure geometry

### Reduction in maintenance work

- Sufficient distance between the module and the roof surface reduces the amount of maintenance required for the green roof

### Existing components

- Installation with existing K2 components
- Derivation of the existing TiltUp Vento system and therefore simple and familiar installation steps

Further information, **all technical data and components**



# Facade



# K2 WallPV FacadeRail System

The FacadeRail system offers the most flexible solution for facades made of solid masonry or concrete.

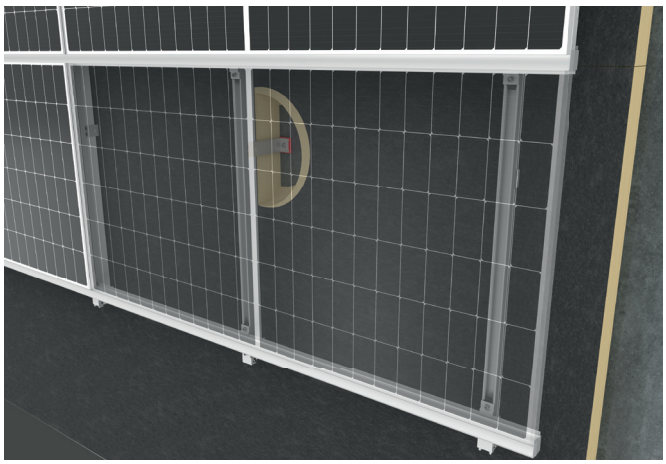

## Flexible installation system with wall brackets for connection to the facade

- Solid masonry or concrete: many approved brackets compatible
- Ventilated curtain wall facade, also in combination with ETICS (External thermal insulation composite system)

## System-Highlights

### Solution for facades with ETICS

- Designed for combination with ventilated rainscreen facades
- Support rail can be mounted on ETICS with consoles

### Compatible with various consoles

- Designed for the most common facade consoles
- Wide range of applications due to high compatibility
- Similar mounting principle and therefore seamless integration of the photovoltaic system into the facade

### Closed surface with InsertionRails

- Elegant overall appearance thanks to silver or black InsertionRails
- Lightning-fast and secure installation with guaranteed rear ventilation

# K2 WallPV CarrierRail System

Facades with sandwich panels are a major field of application for vertical photovoltaic systems, and our solution is the CarrierRail system for FischerTHERM Carrier® panels from Fischer Profil GmbH.

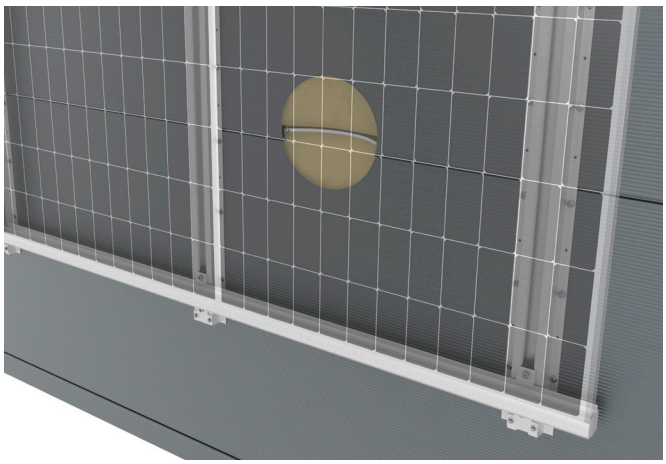

### Facades with FischerTHERM Carrier®

- The solution for facades with FischerTHERM Carrier® sandwich panels on large commercial buildings
- Can be combined with facade cladding

## System-Highlights

### Fast, secure fixing

- Installation with building authority-approved sheet metal screws that are tried and tested in the rooftop sector
- Simple installation thanks to the MK2 rail channel and familiar K2 installation principles

### Closed surface with InsertionRail

- Elegant overall appearance thanks to silver or black InsertionRail
- Lightning-fast and safe installation with guaranteed rear ventilation

# K2 WallPV MultiRail System

One of the most common facade claddings in the Industrial and agricultural industries is trapezoidal or corrugated sheet metal. For these materials, we rely on our tried and tested MultiRail. We offer an efficient and easy to install wall fastener.

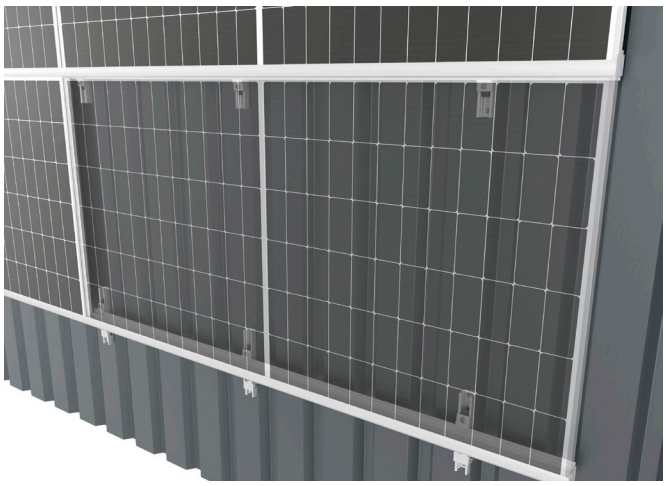

## InsertionRail

- Large scale possible for commerical construction projects
- Attractive overall appearance thanks to closed surface with silver or black InsertionRails
- Lightning-fast and secure installation of the modules on the facade

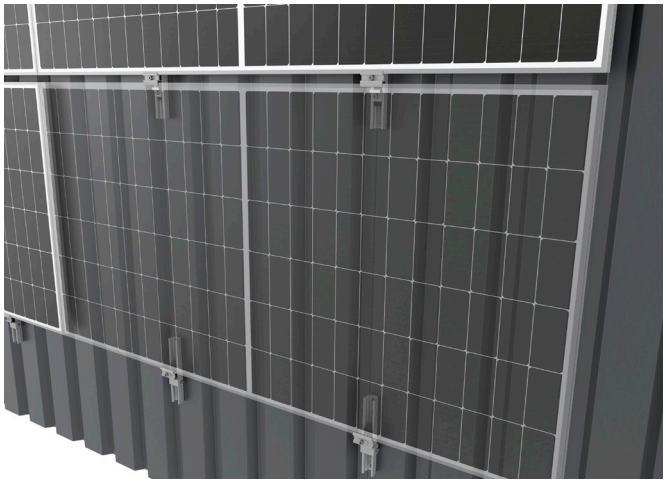

## FacadeClamp module clamps

- Efficient and flexible realisation of smaller systems in workshops or mixed-use buildings

# System-Highlights

## Established system

- Many advantages and high safety thanks to proven system from the rooftop sector
- Simple installation thanks to wall connection and mounting rail in one component

## Universally compatible

- InsertionRail and FacadeClamp systems can be used for the majority of trapezoidal and corrugated sheet metal profiles
- Suitable for warehouses, halls, commercial projects and agricultural buildings - large or small

# Notes

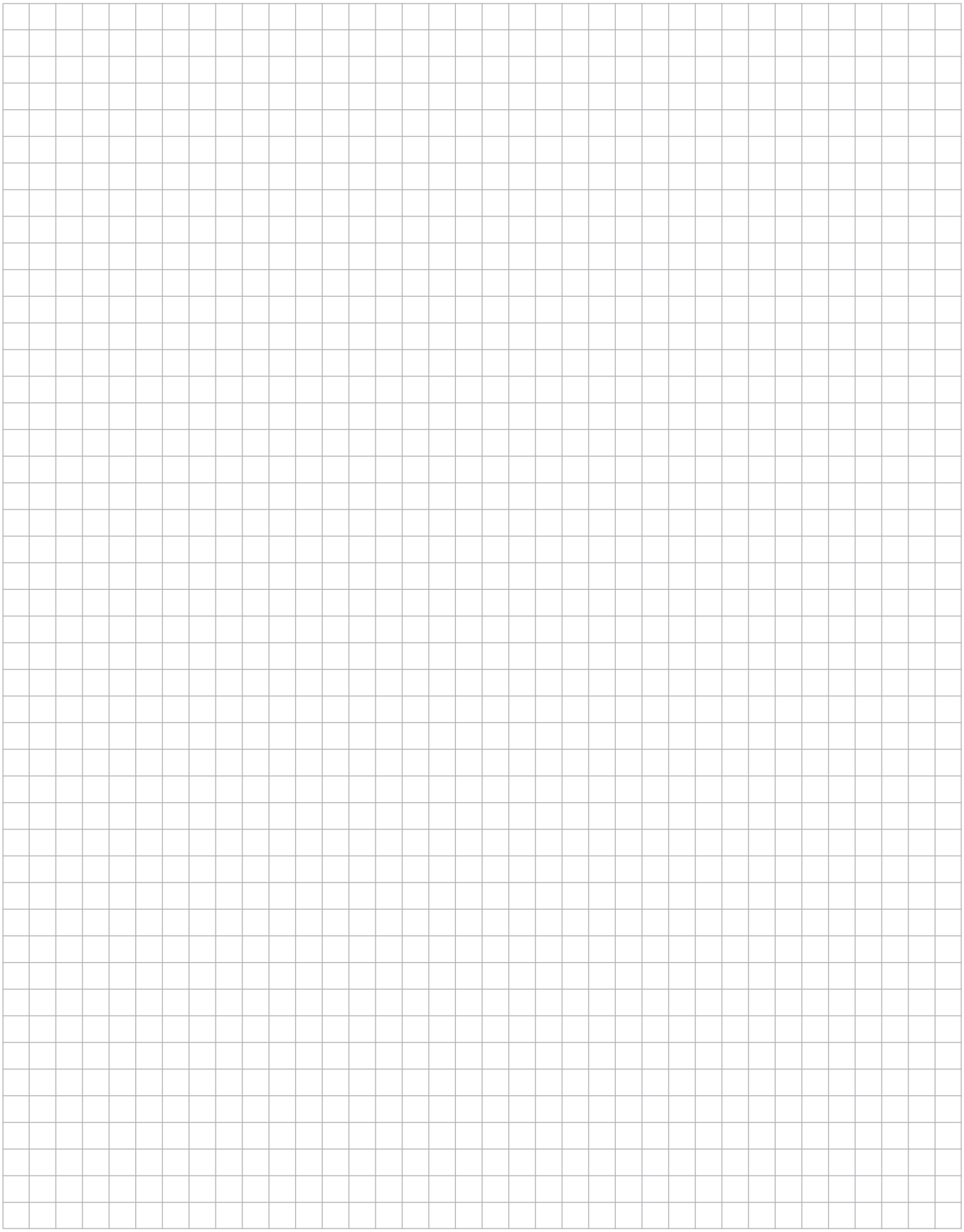

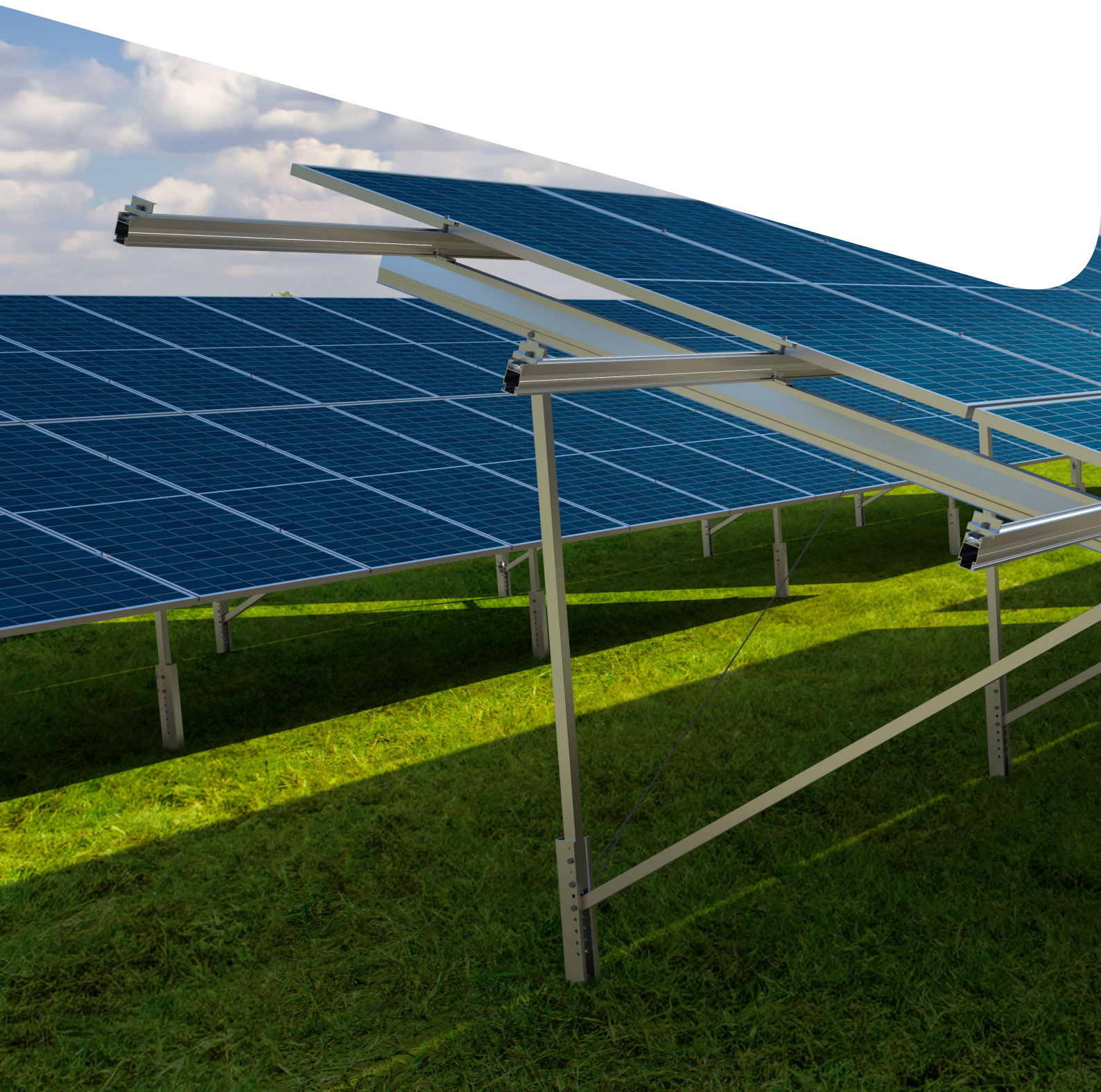

# Ground mounted



# K2 N-Rack System

Fundamentally clever: Systematic ground mounted solutions

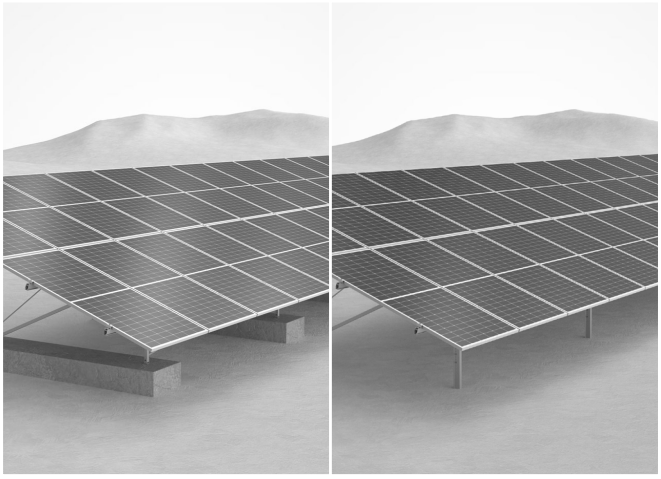

## Simple, flexible and quick installation

- Fixing with concrete or driven pile foundation
- Multiple inclination options: 15° and 20°
- Flexible and customised solution for a wide range of requirements

## System-Highlights

### Multiple foundation options

- Installation directly in the ground or on driven piles foundations
- Quick and cost effective solution using driven pile foundations

### Fast and flexible installation

- Uncomplicated and quick installation
- Best results in a short time

### Multiple inclination options

- Inclination of 20°: Installation of two rows of modules
- Inclination of 15°: possibility of installing three rows of modules

### Future-oriented sustainability

- Sustainable thanks to outstanding recyclability and CO2-optimised production
- Time saving due to very easy handling

# K2 A-Rack/P-Rack System

Solution for small ground-mounted projects and off-grid systems.
Pre-assembled components for 15°, 20° or 25° Inclination.

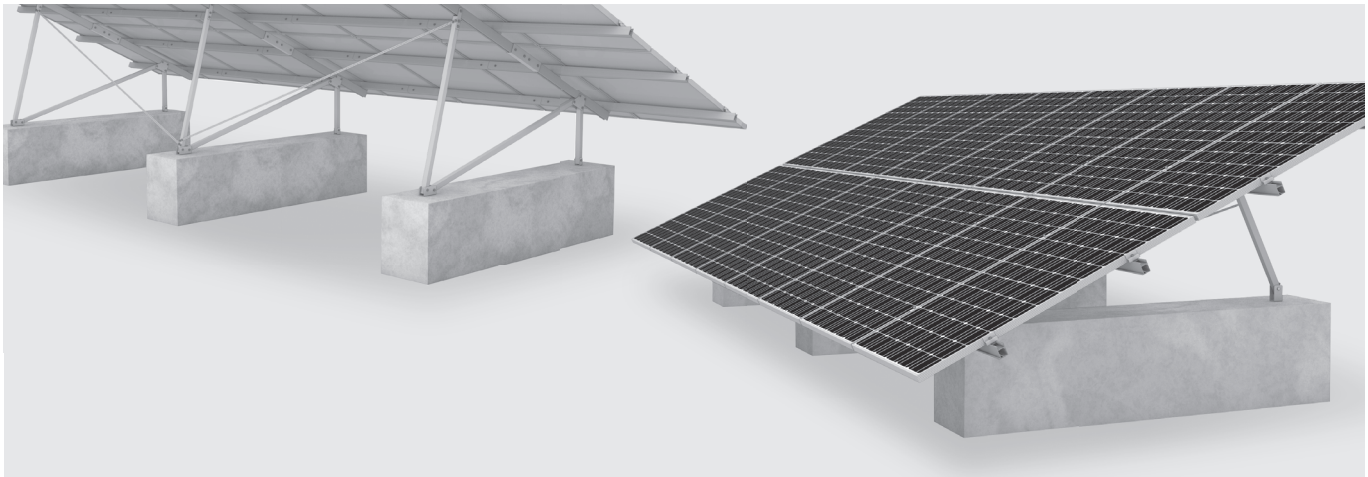

## System-Highlights

### Universal use

- Suitable for almost all floors
- No planning necessary
  (Assembly packages for 14 - 16 modules)

### Different Inclination

- Inclinations of 15°, 20° or 25° possible -
  with only one set
- Flexible use by shortening the support struts to size

### Easy transport

- Packed as pallet goods and transport on pick-up vehicles possible (max. rail length 1.9 m)

### P-Rack: with raised elevation

- Splash water protection of the modules
- Higher incidence of light on the substrate

Further information,
**all technical data and components**

k2-systems.com

**K2 Systems GmbH**
Industriestraße 18 · 71272 Renningen · Germany
+49 (0) 7159 - 42059 - 0 · info@k2-systems.com

Product Brochure EN V2 | 0124 · Subject to change
Product illustrations are exemplary and may differ from the original.