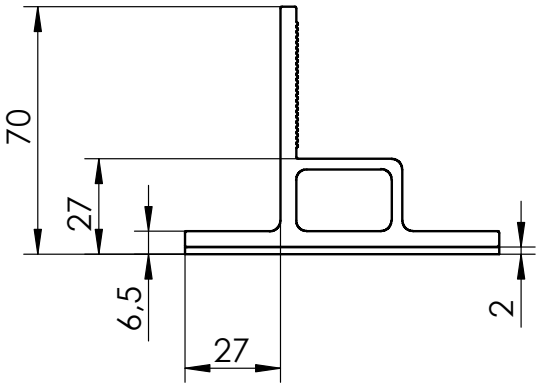

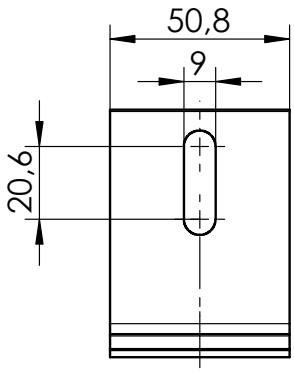

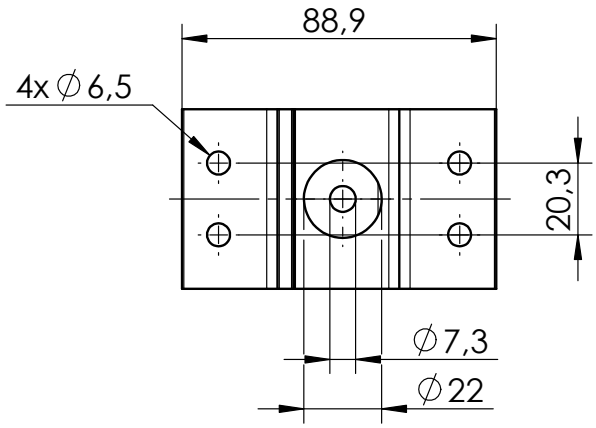

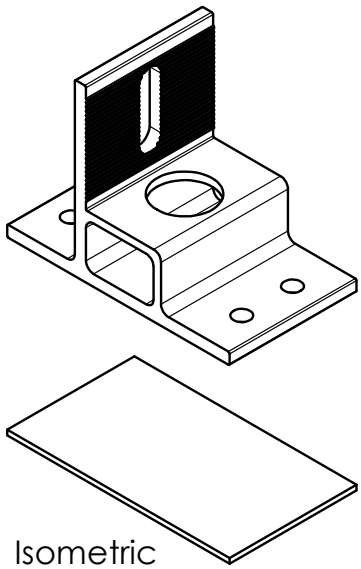

Isometric

Pos.No.	Designation	Material	Quantity
1	SingleRail SpliceFoot Solo	EN AW 6063 T66	1
2	Butyl SingleRail SpliceFoot	Polyisobutylen	1

K2 Systems GmbH
Industriestr. 18
71272 Renningen
Germany
+49 7159 42059-0

Designation:

Data sheet SingleRail SpliceFoot

	Name	Date	Material:	Item no.:	A4
Designed	E. Markou	10.10.2022	see table	2003393	
Approved	A. Gerstenberger	10.10.2022	Surface: -	Drawing no.: 02-240-00	All dimensions in mm
Last change			Weight: ca. 120.3 g/pc	Scale: 1:2	Sheet 1 of 1

This drawing is the sole property of K2 Systems GmbH. It is protected by copyright and may only be copied, reproduced or distributed to a third party with explicit permission!