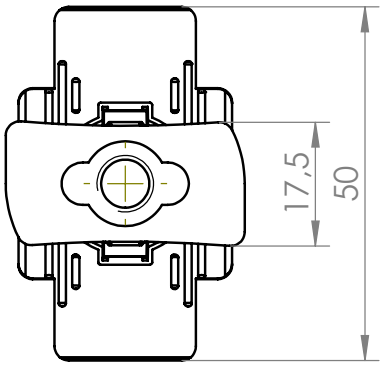

Section A-A

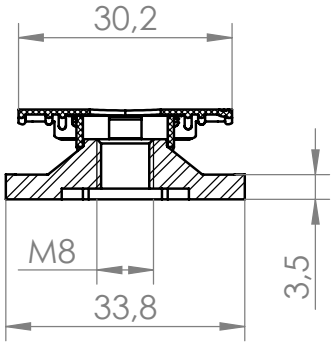

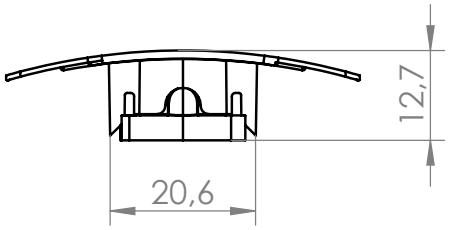

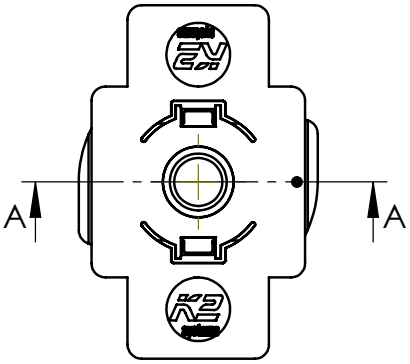

Isometric

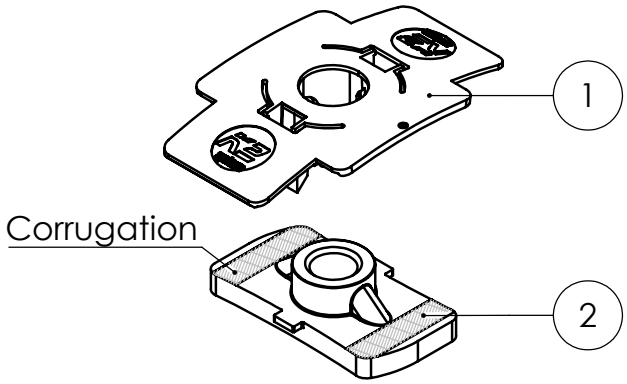

Pos.-no.	Designation	Material	Quantity
1	MK2 Clip	TPC	1
2	MK2 Bottom part M8	Stainless steel (1.4301)	1

K2 Systems GmbH
Industriestr. 18
71272 Renningen
Germany
+49 7159 42059-0

Designation:

Data sheet MK2

	Name	Date	Material:	Item no.:	
Designed	Renz	17.06.2010	see table	1001643	A4
Approved	E. Markou	17.07.2023	Surface: -	Drawing no.: 04-070-03	All dimensions in mm
Last change			Weight: ca. 17.9 g/pc Scale: 1:1		Sheet 1 of 1

This drawing is the sole property of K2 Systems GmbH. It is protected by copyright and may only be copied, reproduced or distributed to a third party with explicit permission!