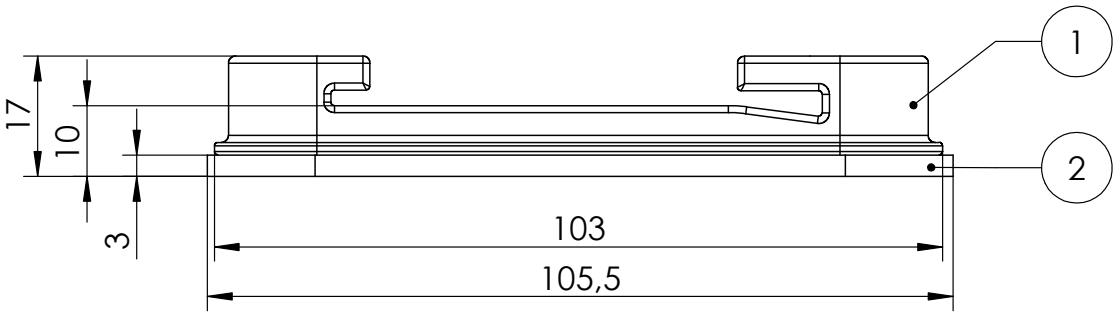

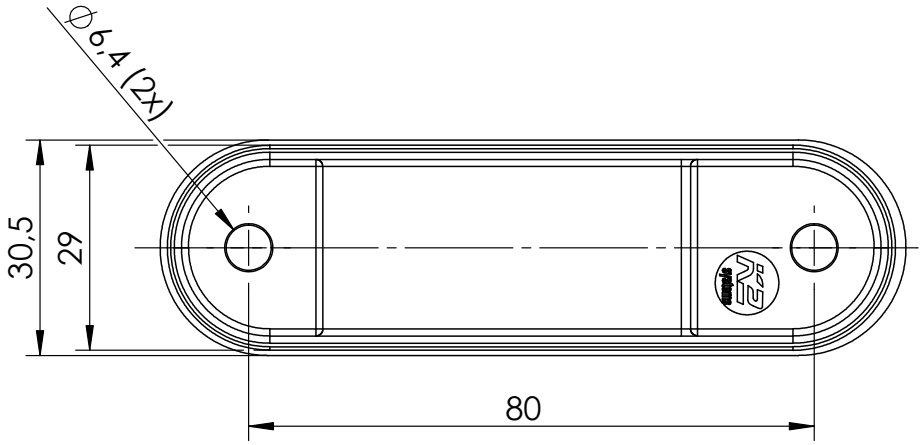

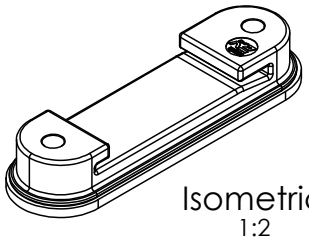

Isometric
1:2

Pos.No.	Designation	Material	Quantity
1	BasicClip	PA6.6-GF 35	1
2	EPDM	EPDM cellular rubber	1

K2 Systems GmbH
Industriestr. 18
71272 Renningen
Germany
+49 7159 42059-0

Designation:

Data sheet BasicClip with EPDM

	Name	Date	Material:	Item no.:	
Designed	Winterhalter	29.06.2010	see table	1001164	A4
Approved	E. Markou	02.03.2023	Surface: -	Drawing no.: 02-050-07	All dimensions in mm
Last change	S. Frey	02.03.2023	Weight: ca. 21.8 g/pc	Scale: 1:1	Sheet 1 of 1

This drawing is the sole property of K2 Systems GmbH. It is protected by copyright and may only be copied, reproduced or distributed to a third party with explicit permission!