

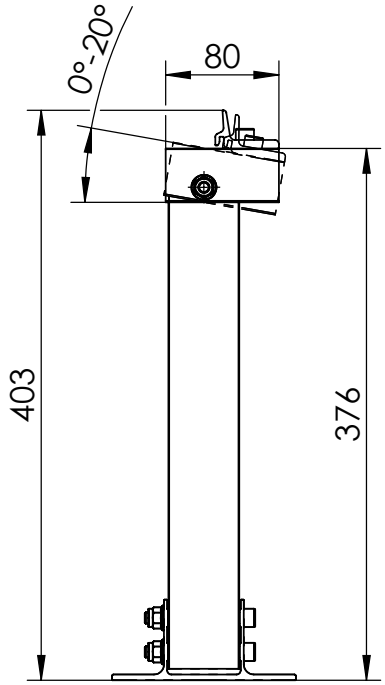

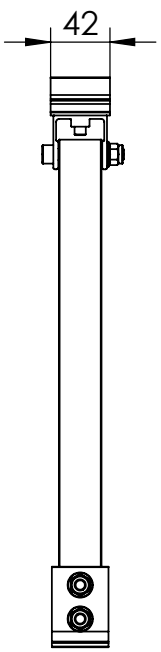

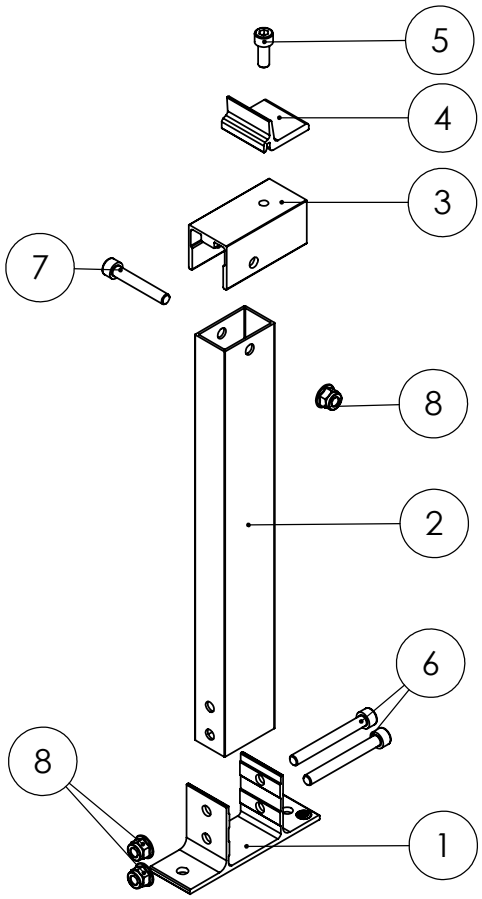

Pos.No.	Designation	Material	Quantity
1	Foot 130x57x40 mm	EN AW 6063 T66	1
2	Brace 50x30x351 mm	EN AW 6063 T66	1
3	Adapter Brace 38x38x80 mm	EN AW 6063 T66	1
4	Climber 36/50 Solo round-hole	EN AW 6063 T66	1
5	Socket head bolt - serrated - sim. ISO 4762 - M8x20 - A2-70	A2-70	1
6	Socket head bolt - ISO 4762 - M8x70 - A2-70	A2-70	2
7	Socket head bolt - serrated - sim. ISO 4762 - M8x50 - A2-70	A2-70	1
8	Hexagon flange nut with clamping piece - DIN 6926 - M8 - A2-70	A2-70	3

K2 Systems GmbH
Haldenstr. 1
71272 Renningen
Germany
+49 7159 42059-0

Designation:

Data sheet GreenRoof 2.0 Support 376

	Name	Date	Material:	Item no.:	Revision:	
Designed	FGR	22.05.2026	-	2005169	00	A4
Approved	JMA	22.05.2026	Surface:			All dimensions in mm
Last change			Weight: ca. 630.7 g/pc	Scale: 1:5		Sheet 1 of 1

This drawing is the sole property of K2 Systems GmbH. It is protected by copyright and may only be copied, reproduced or distributed to a third party with explicit permission!