

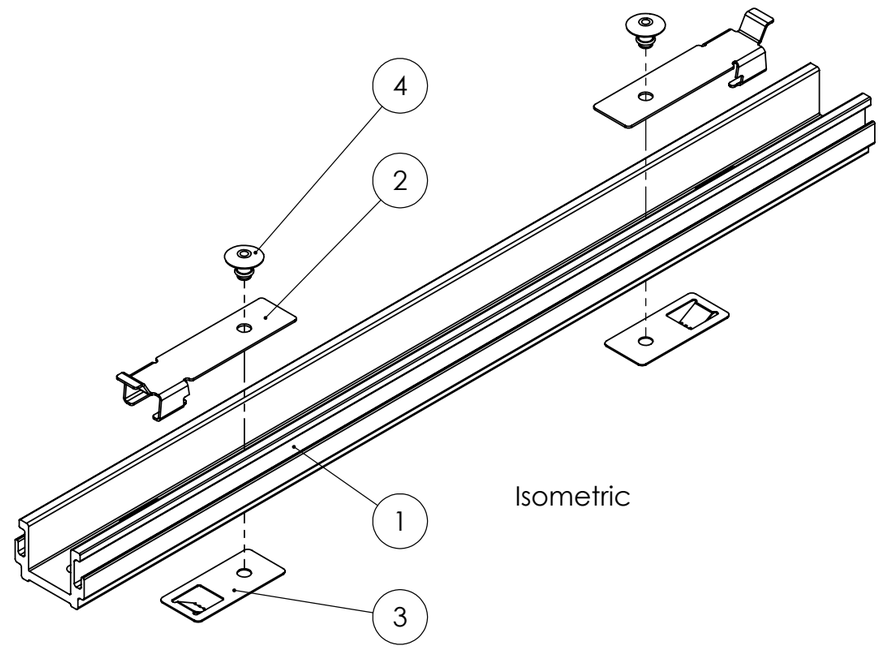

Isometric

Pos.No.	Designation	Material	Quantity
1	Dome 6 Xpress Connector Long	EN AW 6063 T66	1
2	Dome Connector L top sheet metal	1.4310 C1100	2
3	Dome Connector L bottom sheet metal	1.4310 C1300	2
4	Blind rivet 5x10 K14	A2	2

K2 Systems GmbH
Haldenstr. 1
71272 Renningen
Germany
+49 7159 42059-0

Designation:
Data sheet Dome 6 Xpress Connector Long Set

	Name	Date	Material:	Item no.:	Revision:	
Designed	FGR	07.08.2026		2005221	00	A3
Approved	AKH	10.08.2026	Surface:			All dimensions in mm
Last change			Weight: ca. 298.66 g /pc Scale: 1:2			Sheet 1 of 1

This drawing is the sole property of K2 Systems GmbH. It is protected by copyright and may only be copied, reproduced or distributed to a third party with explicit permission!